BID PACKET
COUNTY OF TEHAMA

Corning Veteran's Hall Remodel

BIDS DUE ON OR BEFORE:

3:00 P.M.
April 3, 2025

SECTION 00 01 10

TABLE OF CONTENTS

00 00 00 PROCUREMENT & CONTRACTING REQUIREMENTS

00 01 01 PROJECT TITLE PAGE
00 01 10 TABLE OF CONTENTS

00 20 00 INSTRUCTIONS FOR PROCUREMENT

00 21 13 INSTRUCTIONS TO CONTRACTORS

00 30 00 AVAILABLE INFORMATION

00 31 00 BIDDING REQUIREMENTS SUMMARY

00 40 00 PROCUREMENT FORMS & SUPPLEMENTS

00 42 00 PROPOSAL BID FORM
00 45 19 NON-COLLUSION AFFIDAVIT

00 50 00 CONTRACTING FORMS & SUPPLEMENTS

00 52 13 AGREEMENT FORM

00 60 00 PROJECT FORMS

00 61 13.13 PERFORMANCE BOND FORM
00 61 13.16 PAYMENT BOND FORM

00 70 00 CONDITIONS OF THE CONTRACT

00 70 00 GREEN BUILDING CODE
00 72 00 GENERAL CONDITIONS
00 73 00 SUPPLEMENTARY CONDITIONS

DIVISION 01 GENERAL REQUIREMENTS

01 11 00 SUMMARY OF WORK
01 23 00 ALTERNATES
01 26 00 CONTRACT MODIFICATION PROCEDURES
01 26 13 REQUESTS FOR INTERPRETATION
01 29 00 PAYMENT PROCEDURES
01 31 00 PROJECT MANAGEMENT COORDINATION
01 31 10 CONSTRUCTION SCHEDULE
01 33 00 SUBMITTAL PROCEDURES
01 40 00 QUALITY REQUIREMENTS
01 42 00 REFERENCES

01 43 13 BID BOND
01 50 00 TEMPORARY FACILITIES & CONTROLS
01 60 00 PRODUCT REQUIREMENTS
01 62 00 PRODUCT OPTIONS
01 62 33 PRODUCT SUBSTITUTION REQUEST FORM
01 70 00 EXECUTION REQUIREMENTS
01 73 29 CUTTING AND PATCHING
01 74 00 CLEANING
01 75 00 STARTING AND ADJUSTING
01 76 00 PROTECTING INSTALLED CONSTRUCTION
01 77 00 CLOSEOUT PROCEDURES
01 78 36 WARRANTIES
01 78 36.10 WARRANTY FORM
01 79 00 DEMONSTRATION AND TRAINING

DIVISION 02 EXISTING CONDITIONS

02 41 13 SELECTIVE SITE DEMOLITION
02 41 14 DEMOLITION FOR REMODELING
02 41 16 STRUCTURE DEMOLITION

DIVISION 03 CONCRETE

03 05 00 COMMON WORK RESULTS FOR CONCRETE
03 11 00 CONCRETE FORMING
03 15 00 CONCRETE ACCESSORIES
03 15 16 CONCRETE CONSTRUCTION JOINTS
03 21 00 REINFORCEMENT BARS
03 30 00 CAST-IN-PLACE CONCRETE
03 39 00 CONCRETE CURING
03 45 00 PRECAST ARCHITECTURAL CONCRETE

DIVISION 05 METALS

05 12 00 STRUCTURAL STEEL FRAMING
05 30 00 METAL DECKING
05 50 00 METAL FABRICATIONS

DIVISION 06 WOOD, PLASTICS AND COMPOSITES

06 10 00 ROUGH CARPENTRY
06 16 00 SHEATHING
06 17 10 SHOP-FABRICATED STRUCTURAL WOOD
06 17 13 LAMINATED VENEER LUMBER
06 17 53 METAL PLATE CONNECTED WOOD TRUSSES
06 20 00 FINISH CARPENTRY
06 41 00 CUSTOM CASEWORK
06 61 16 SOLID SURFACING FABRICATIONS

DIVISION 07 THERMAL AND MOISTURE PROTECTION

07 21 00 BATT INSULATION SYSTEMS
07 21 16 RIGID INSULATION WITH TAPERED FOAM
07 54 19 POLYVINYL-CHLORIDE ROOFING
07 62 00 SHEET METAL FLASHING AND TRIM
07 72 00 ROOF ACCESSORIES
07 92 00 JOINT SEALANTS

DIVISION 08 OPENINGS

08 11 00 METAL DOORS AND FRAMES
08 14 23.16 PLASTIC-LAMINATE-FACED WOOD DOORS
08 31 13 ACCESS DOORS AND FRAMES
08 33 13 COILING COUNTER DOORS
08 52 30 FIXED CLAD WOOD WINDOWS
08 71 00 DOOR HARDWARE
08 71 13 AUTOMATIC DOOR OPERATORS
08 80 00 GLAZING

DIVISION 09 FINISHES

09 21 16 GYPSUM BOARD ASSEMBLIES
09 24 00 CEMENT PLASTERING
09 30 00 TILING
09 51 13 ACOUSTICAL PANEL CEILINGS
09 64 66.10 REFINISH WOOD ATHLETIC FLOORING
09 65 00 RESILIENT FLOORING
09 65 13 RESILIENT BASE AND ACCESSORIES
09 68 15 WALK-OFF TILE CARPETING
09 74 13 WOOD WALL COVERINGS
09 77 30 FIBERGLASS WALL PANELS
09 84 13 FIXED SOUND-ABSORPTIVE PANELS
09 90 00 PAINTING AND COATING

DIVISION 10 SPECIALTIES

10 12 00 DISPLAY CASES
10 14 00 SIGNAGE
10 14 16 PLAQUES
10 14 53 TRAFFIC SIGNAGE
10 21 13 TOILET COMPARTMENTS
10 26 13 CORNER GUARDS
10 26 23 PROTECTIVE WALL COVERING
10 28 13 TOILET ACCESSORIES
10 44 16 FIRE EXTINGUISHERS AND CABINETS

DIVISION 11 EQUIPMENT

11 40 00 FOODSERVICE EQUIPMENT
11 42 16 FOOD PREPARATION SURFACES
11 61 43 STAGE CURTAINS

DIVISION 12 FURNISHINGS

12 24 13 WINDOW SHADES
12 48 19 ENTRANCE FLOOR GRATINGS

DIVISION 13 SPECIAL CONSTRUCTION

13 28 00 HAZ MAT ABATEMENT
13 34 19 METAL SHADE STRUCTURE / PV ARRAY SUPPORT

DIVISION 14 CONVEYING EQUIPMENT

14 42 16 VERTICAL WHEELCHAIR LIFTS

DIVISION 22 PLUMBING

22 00 00 PLUMBING

DIVISION 23 HEATING, VENTILATING AND AIR CONDITIONING

23 00 00 HEATING, VENTILATING AND AIR CONDITIONING (HVAC)
23 05 93 TESTING, ADJUSTING AND BALANCING FOR HVAC
23 09 00 INSTRUMENTATION AND CONTROL FOR HVAC

DIVISION 26 ELECTRICAL

26 00 00 GENERAL ELECTRICAL
26 31 00 PHOTOVOLTAIC SYSTEM

DIVISION 27 COMMUNICATION

27 10 00 STRUCTURED CABLING SYSTEM

DIVISION 28 ELECTRONIC SAFETY AND SECURITY

28 30 00 INTRUSION ALARM SYSTEM

DIVISION 32 EXTERIOR IMPROVEMENTS

32 14 16 ENGRAVED BRICK UNIT PAVING
32 80 00 IRRIGATION
32 90 00 PLANTING

APPENDICES

APPENDIX A – FOCUSED ASBESTOS & LEAD-BASED PAINT NESHAP SURVEY REPORT

Board of Supervisors
COUNTY OF TEHAMA

District 1 – Bill Moule
District 2 – Candy Carlson
District 3 – Pati Nolen
District 4 – Matt Hansen
District 5 – John Leach

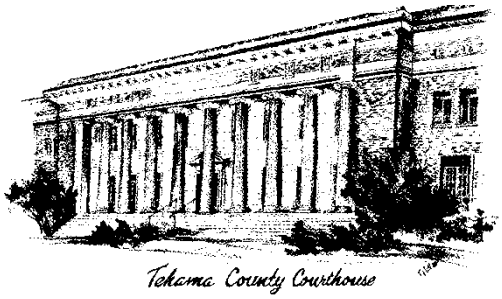

Gabriel Hydrick
Chief Administrator

NOTICE TO CONTRACTORS

NOTICE IS HEREBY GIVEN that the Board of Supervisors of the County of Tehama, will receive bids for the **"CORNING VETERAN'S HALL REMODEL PROJECT".**

Bids shall be submitted on forms included in the Bid Packet. Copies of the Bid Packet and the drawings may be obtained from Tehama County Administration, 727 Oak Street, Red Bluff, CA 96080, (530) 527-4655, Attn: Tom Provine.

Copies are on file and open to public inspection at Tehama County Administration at the above address. Bid documents can also be examined at area Builders Exchanges and on the County website at www.co.tehama.ca.us under "Bidding Opportunities".

Bids must be received at Tehama County Administration, 727 Oak Street, Room #202, Red Bluff, CA 96080 not later than **3:00 P.M. on April 3, 2025**, at which time the Project Coordinator will open said bids. Bids shall be submitted in sealed envelopes and marked in the upper left hand corner, "Corning Veteran's Hall Remodel Project", together with the name and address of the bidder. The bids will be opened and read publicly and bidders or their agents are invited to be present.

There will be a non-mandatory pre-bid walk-thru on Wednesday, March 12, 2025, at 10:00 a.m., on site, at 1620 Solano Street, Corning, California.

Pursuant to Section 1770 and following of the Labor Code, the Contractor for the work will be required to pay, at least, the general prevailing wage rates as determined by the Director of the Department of Industrial Relations of the State of California. Questions or wage rates pertaining to the general prevailing wage should be directed to the Division of Labor Statistics and Research, P.O. Box 420603, San Francisco, CA 94142-0603 or http://www.dir.ca.gov/DLSR/PWD/TEH.xls

Bid bond, labor and material bond and performance bonds are required. The County reserves the right to reject any and all bids and waive any informalities or irregularities in the bidding. Each bidder must be appropriately

licensed in the State of California and registered with the Department of Industrial Relations for this project as required by law.

PURCHASING AGENT

Tom Provine

Publish in the Red Bluff Daily News on February 26, 2025 and March 4, 2025. Send proof of publication and invoice to: Tehama County Administration, 727 Oak Street, Red Bluff, CA 96080. Prior to publication, please fax proof to 527-3764, Attn: Tom Provine

SECTION 00 30 00

PROJECT DESCRIPTION

CORNING VETERAN'S HALL REMODEL

The project consists of a complete renovation of the interior of the Corning Veteran's Hall, located at 1620 Solano Street in Corning, California. Improvements will include new mechanical systems, plumbing systems, electrical systems, roofing, insulation, finishes, and kitchen equipment. Exterior improvements will include new covered entries, paving, site utilities, landscaping and a photo voltaic array.

This is only a summary. See entire project documents for full scope of the project.

SECTION 00 23 00

BIDDING REQUIREMENTS SUMMARY

1. PROJECT TITLE:	Corning Veteran's Hall Remodel
2. PROJECT LOCATION:	1620 Solano Street. Corning, California
3. BID OPENING DATE:	April 3, 2025 at 3:00pm
4. BID PLACE:	Tehama County Administration 727 Oak Street, Room #202 Red Bluff, CA 96080
5. NON-MANDATORY PRE BID MEETING: PLACE:	1620 Solano Street, Corning, CA
6. BID SECURITY:	10% of maximum amount of bid
7. CONSTRUCTION TIME PERIOD:	300 Calendar Days
8. LICENSE REQUIREMENTS:	Class B
9. LIQUIDATED DAMAGES:	$500 per day
10. LABOR AND MATERIALS PAYMENT BOND:	100% of the total bid
11. PERFORMANCE BOND:	100% of the total bid
12. PREVAILING WAGE RATES:	Yes
13. BID VALID FOR:	60 Days
14. NON-REFUNDABLE DEPOSIT FOR CONTRACT DOCUMENTS:	$100
15. ESTIMATE OF CONSTRUCTION COSTS:	$5,087,804

16. BUILDERS EXCHANGES ISSUED CONSTRUCTION DOCUMENTS:

Shasta Builders Exchange
5800 Airport Road
Redding, CA 96002
(530) 221-5556
(530) 221-2140 FAX

Valley Contractors Exchange
951 East 8th Street
Chico, CA 95928
(530) 343-1981
(530) 343-3503 FAX

Sacramento Builders Exchange
1331 T Street
Sacramento, CA 95814
(916) 442-8991
(916) 446-3117 FAX

Reed Construction Data
leah.dearce@cmdgroup.com
(770) 209-3396
(678) 680-0698

SECTION 00 42 00

PROPOSAL BID FORMS

COUNTY OF TEHAMA

Board of Supervisors
County of Tehama
Red Bluff, CA

Board Members:

The undersigned bidder, _____ in accordance with the Notice to Contractors, hereby proposes and agrees to furnish any and all services necessary to perform all Work required by the Contract Documents for the:

Corning Veteran's Hall Remodel

including, but not limited to, furnishing all required labor, materials, taxes, permits, insurance, bonds, transportation, scaffolding, equipment, facilities, utilities, and incidentals.

If awarded the Contract, the undersigned hereby agrees that within ten (10) working days after receipt of the Contract from the County, he will sign the Contract in the required form, of which the Notice to Contractors, Instructions to Bidders, Proposal, Bid Forms, Bonds, General and Supplementary Conditions, Drawings, Specifications, and all Addenda issued prior to the opening of bids, are a part.

The undersigned agrees to complete all work required under the Contract within 30 calendar days, and accept in full payment the price named in the Bid Proposal, which is bound herein and made a part of this proposal.

The undersigned declares that he has carefully checked all of the figures submitted on the Bid Forms and understands that the County will not be responsible for errors or omissions on the part of the undersigned in making up this bid.

Bidder hereby certifies that the Bidder has reviewed and understands the insurance coverage requirements and bonding requirements, as specified in the General Conditions, Article 5 – Bonds and Insurance. Should the Bidder be awarded the contract for the work, Bidder further certifies that the Bidder can meet the specified requirements for bonding and insurance, including insurance coverage of the subcontractors, and agrees to name the County of Tehama, its elected officials, officers, and employees as additional insured for the work specified. The undersigned agrees to secure the required insurance and bonds and submit them prior to or concurrent with the return of the signed Contract.

Accompanying this proposal is a "Cashier's Check", "Certified Check" or "Bidder's Bond", as the case may be, in an amount equal to at least ten percent (10%) of the total of the bid.

_____ _____
Name (print) Representing (Firm)

_____
Signature

_____ _____
Title Business Address

Taxpayer I.D. No. _____

Contractor's License No._____

Department of Industrial Relations (DIR) Registration No. _____

Receipt of the following Addenda is hereby acknowledged:

Addendum No. _____ Bidder's Initials ____

Addendum No. _____ Bidder's Initials ____

Addendum No. _____ Bidder's Initials ____

PROPOSAL FOR

Corning Veteran's Hall Remodel

The undersigned bidder hereby proposes and agrees to furnish any and all services necessary to perform all Work required by the Contract Documents:

Bid:

Furnish all labor, materials, taxes, insurance, bonds, transportation, equipment, facilities, utilities, and incidentals for the "Corning Veteran's Hall Remodel" for the sum as listed below.

BID AMOUNT:

_____ dollars
(written numbers)

$_____
(figures)

Bidder_____

Date_____

Corning Veteran's Hall Remodel

LIST OF SUBCONTRACTORS

Pursuant to Public Contract Code 4104, the undersigned bidder shall list the name and location of business of each Subcontractor who will perform work, labor or service to the bidder under this Contract in excess of one-half of one percent (1/2%) of the total amount shown in the bid, and shall also list the item or portions of the Work which will be done by such Subcontractor for any item or portion of Work to be performed.

LIST OF SUBCONTRACTORS:

All blanks below must be completed for each subcontractor. Failure to do so may cause your bid to be declared nonresponsive:

Subcontractor

Name:_____

Location of place of business:_____

License No. _____

DIR No. _____

Work to be done:_____

Subcontractor

Name:_____

Location of place of business:_____

License No. _____

DIR No. _____

Work to be done:_____

Subcontractor

Name:_____

Location of place of business:_____

License No. _____

DIR No. _____

Work to be done:_____

Subcontractor

Name:_____

Location of place of business:_____

License No. _____

DIR No. _____

Work to be done:_____

Subcontractor

Name:_____

Location of place of business:_____

License No. _____

DIR No. _____

Work to be done:_____

Subcontractor

Name:_____

Location of place of business:_____

License No. _____

DIR No. _____

Work to be done:_____

Subcontractor:

Name:_____

Location of place of business:_____

License No. _____

DIR No. _____

Work to be done:_____

No Contractor may perform work on a public works project with a Subcontractor who is ineligible to perform work on a public works project pursuant to Section 1777.1 or 1777.7 of the Labor Code.

Corning Veteran's Hall Remodel

INFORMATION REQUIRED OF BIDDERS

The bidder is required to supply the following information.

1. Firm Name _____

2. Representative _____

3. Title _____

4. Business Address _____

6. Telephone _____ Cell # _____ Fax # _____

7. Email Address _____

8. California Contractors License(s):

   No(s). _____ Type(s) _____

9. California Department of Industrial Relations Registration No. _____

SECTION 00 45 19

NON-COLLUSION AFFIDAVIT

COUNTY OF TEHAMA

TO BE EXECUTED BY THE BIDDER AND SUBMITTED WITH THE BID

To: County of Tehama
State of California

_____ deposes and says that he or she is _____(title) of _____, the party making the foregoing bid that the bid is not made in the interest of, or on behalf of, any undisclosed person, partnership, company, association, organization, or corporation; that the bid is genuine and not collusive or sham; the bidder has not directly or indirectly induced or solicited any other bidder to put in a false or sham bid, and has not directly or indirectly colluded, conspired, connived, or agreed with any bidder or anyone else to put in a sham bid, or that anyone shall refrain from bidding; that the bidder has not in any manner, directly or indirectly, sought by agreement, communication, or conference with anyone to fix the bid price, or of that of any other bidder, or to secure any advantage against the public body awarding the contract of anyone interested in the proposed contract; that all statements contained in the bid are true and further, that the bidder has not directly or indirectly, submitted his or her bid price or any breakdown thereof, or the contents thereof, or divulged information or data relative thereto, or paid, and will not pay, any fee to any corporation partnership, company association, organization, bid depository, or to any member or agent thereof to effectuate a collusive or sham bid.

(The above certificate must be signed and filed with the County along with the bid)

Signed_____ Date_____

SECTION 00 52 13

AGREEMENT FORM

THIS AGREEMENT, entered into as of _____, 20__, is between the **County of Tehama**, a public entity, organized and existing pursuant to the laws of the State of California (hereinafter called the "COUNTY") and _____**,** (hereinafter called the "Contractor"),

WHEREAS, the Contractor has been awarded the contract for the work hereafter mentioned:

"_____"

WITNESSETH:

That the parties hereto mutually agree to the terms and conditions hereinafter set forth.

I. CONTRACT DOCUMENTS

The Items hereinafter enumerated as the Contract Documents shall form a part of this Contract and the provisions thereof shall be as binding upon the parties hereto as if they were herein fully set forth. Work called for in any one Contract Document and not mentioned in another is to be performed and executed the same as if mentioned in all Contract Documents, the table of contents, titles, and headings contained herein and in said documents are solely to facilitate reference to various provisions of the Contract Documents and in no way affect or limit the interpretations of the provisions to which they refer.

The "Contract Documents", sometimes also referred to as the Contract, consist of the completed Form of Proposal submitted by the Contractor to whom the Contract is awarded, the Instructions to Bidders insofar as they relate to events which will occur or actions to be taken after the submission of the Proposal, this Agreement to which the General Conditions are attached, the General Requirements, the Supplementary Conditions, the Drawings and Specifications and any modifications of any of the foregoing in the form of addenda or otherwise effected in accordance with the terms of the Contract.

The sections of the COUNTY's Specifications and the titles of the Drawings, with their assigned numbers and their date of issue, are listed in the Contract Documents.

II. DEFINITIONS

Unless otherwise specifically provided herein, all words and phrases defined in the General Conditions shall have the same meaning and intent in this Agreement.

SAMPLE

III. SCOPE OF THE CONTRACT

The Contractor shall perform, within the time stipulated, the Contract as herein defined, and shall furnish all labor, tools, equipment, apparatus, facilities, labor and material and transportation necessary to perform and complete in a good workmanlike manner to the satisfaction of the COUNTY, all the work called for, and in the manner designated in, and in strict conformity with, the Contract Documents entitled: "Tehama County Agricultural Center**.**"

IV. CONTRACT PRICE

The COUNTY agrees to pay and the Contractor agrees to accept, in full payment for the work included in the Bid the total sum of:

_____ ($_____).
(spell out)

V. CONTRACT TIME, COMPLETION, AND CHANGES

A. Notice to Proceed

Within 60 days of the opening of bids the successful low bidder will be authorized by written notice to proceed with the work. The bidder shall have no claim against the COUNTY, or its officers, employees, agents, consultants, project manager or architect because of failure to issue the Notice to Proceed.

B. Commencement and Prosecution of Work

The Contractor shall commence the work on or before 10 days from and after the date specified in the written "Notice to Proceed," and will diligently prosecute the work to final completion. Said Notice to Proceed shall be issued following execution of the Agreement, the filing by the Contractor of the required bonds and proof of insurance. The continuous prosecution of work by the Contractor shall be subject only to delays as defined in this section of this Agreement.

C. Time of Completion

The entire work shall be brought to substantial completion in the manner provided for in the Contract Documents in a period of 300 calendar days from and after the date assigned in the Notice to Proceed. The date, 300 calendar days from and after the date of the Notice to Proceed shall be hereinafter called the "Estimated Completion Date" unless extensions of time are granted in accordance with the Contract Documents for Category A or B Delays as defined in this section of this Agreement. Failure to substantially complete the work within the above times and in the manner provided for by the Contract Documents shall subject the Contractor to liquidated damages as hereinafter stipulated in this Agreement. Time is and shall be of the essence in these Contract Documents.

SAMPLE

D. Changes in the Work

Changes in the work made and extensions of time of completion made necessary by reason thereof shall not in any way release any guarantee given by the Contractor pursuant to the provision of the Contract Documents, or the contract let hereunder, nor shall such changes in the work relieve or release the Sureties on bonds executed pursuant to the said provisions. The Sureties, in executing such bonds, shall be deemed to have expressly agreed to any such change in the work and to any extension of time made by reason thereof. The COUNTY agrees that no changes in the work shall be ordered which will necessitate an extension of the substantial completion time beyond the fixed completion date.

E. Extensions of Time

In the event it is deemed necessary by the COUNTY to extend the time of substantial completion of the work to be done under this contract beyond any required dates of completion herein specified, such extensions shall in no way release any guarantee given by the Contractor pursuant to the provisions of the Contract Documents, or the contract let hereunder, nor shall such extension of time relieve or release the sureties on the bonds executed pursuant to said provisions. The sureties in executing such bonds shall be deemed to have expressly agreed to any such extension of time. The amount of time allowed in any Extension of Time shall be limited to the period of the delay-giving rise to the same as determined by the COUNTY.

F. Prevailing Wages

Pursuant to Section 1770 et seq. of the Labor Code the Contractor for the work will be required to pay, at least, the general prevailing wage rates as determined by the Director of the Department of Industrial Relations of the State of California. Questions pertaining to the general prevailing wage rates should be directed to the Division of Labor Statistics and Research, P.O. Box 603, San Francisco, CA 94101, Ph. (415) 703-4774.

G. Category A Delays

For the purpose of these Contract Documents, the term "Category A Delays" shall mean, and is limited to, delays caused directly by acts of God; acts of the public enemy; fire, riots, insurrections; epidemics; quarantine restrictions; strikes; lockouts; sit-downs; acts of a governmental agency; priorities or privileges established for the manufacture, assembly or allotment of materials necessary in the construction of the work by order, decree or otherwise of the United States or by any department, bureau, commission, committee, agent, or administrator of any legally constituted public authority; changes in the work ordered by the COUNTY insofar as they necessarily require additional time in which to substantially complete the work; the prevention by the COUNTY of the Contractor from commencing or prosecuting the work because of the acts of others, excepting the Contractor's subcontractors; or the prevention of the

SAMPLE

Contractor from commencing or prosecuting the work because of a city-wide failure of public utility service.

Inclement weather shall not be a prima facie reason for the granting of an extension of time, and the Contractor shall make every effort to continue work under prevailing conditions. The COUNTY may, however, grant an extension of time if an unavoidable delay as a result of inclement weather in fact occurs, and such shall then be classified as a "Category A Delay".

The term "Category A Delay" shall specifically not include (i) any delay which could have been avoided by the exercise of care, prudence, foresight and diligence on the part of the Contractor; (ii) any delay in the prosecution of parts of the work, which may in itself be unavoidable but which does not necessarily prevent or delay the prosecution of other parts of the work, nor substantial completion of the whole work within the time specified; (iii) any reasonable delay resulting from time required by the COUNTY for review of plans submitted by the Contractor and for the making of surveys, measurements and inspection; and (iv) any delay arising from an interruption in the prosecution of the work on account of the reasonable interference from other contractors employed by the COUNTY which does not necessarily prevent the completion of the whole work within the time specified.

H. Category B Delays

For the purposes of these Contract Documents, the term "Category B Delays" shall mean delays caused directly by loss or damage to the project caused by the perils covered by the Builder's Risk insurance provided for by the Agreement or by any war declared by an enactment of the Congress of the United States of America.

VI LIQUIDATED DAMAGES

The provisions for Liquidated Damages appearing in the General Conditions, Article 12, are incorporated by reference as if fully set forth herein. Liquidated damages of $500 per day will be charged the Contractor for each day of delay beyond the substantial completion date.

VII NOTICE OF DELAY

The Contractor shall promptly notify the COUNTY in writing of any anticipated delay in the prosecution of the work, and, in any event, promptly upon the occurrence of a delay. Said notice shall constitute an application for an extension of contract time only if it is in compliance with the provisions of Article 12. Failure by the Contractor to make a timely request will result in a waiver of the right to such extension. Contractor shall take notice of General Conditions, Article 12, affecting the time period in which to claim an extension of the contract time for physical conditions and limitations set forth in the General Conditions, Article 12. The COUNTY may take steps to prevent the occurrence of continuance of the delay and/or may determine to what extent the completion of the work is delayed thereby.

SAMPLE

VIII NO WAIVER OF RIGHTS

Neither the inspection by the COUNTY or its agents, nor any order or certificate for the payment of money, nor any payment for, nor acceptance of the whole or any part of the work by the COUNTY, nor any extensions of time, nor any position taken by the COUNTY or its agents shall operate as a waiver of any provision of this Contract, or of any power herein reserved to the COUNTY or any right to damage herein provided, nor shall any waiver of any breach of this Contract be held to be a waiver of any other or subsequent breach. All remedies provided in this Contract shall be taken and construed as cumulative, that is in addition to each and every other remedy herein provided; and the COUNTY shall have any and all equitable and legal remedies which it would in any case have.

IX CALIFORNIA GREEN BUILDING CODE

Contractor shall comply with the provisions of the "California Green Building Code Requirements for New Construction" attached hereto as Exhibit "A." Immediately upon execution of this agreement, and before receiving the Notice to proceed, Contractor shall complete the Green Building Code Waste Management Plan and obtain approval of the Plan from the Tehama County/Red Bluff Landfill Management Agency.

X AGREEMENT CONTROLS

In the event of a conflict between the Contract Documents, the conflict shall be resolved by giving precedence in the following order: (1) This Agreement Form, including Exhibit A, CA Green Building Code Requirements; (2) the General Conditions and General Requirements; (3) the Supplementary Conditions; (4) the Notice to Contractors; (5) the Instructions to Bidders; (6) the Technical Specifications text; (7) the Drawings (Plans).

CERTIFICATION

COUNTY:

BY: _____ DATED_____
CHAIR, TEHAMA COUNTY
BOARD OF SUPERVISORS

CONTRACTOR:

BY: _____ DATED_____
Contractor

SAMPLE

Approved as to form:

_____
County Counsel

SAMPLE

SECTION 00 61 13.13

PERFORMANCE BOND

KNOW ALL PERSONS BY THESE PRESENTS: That, WHEREAS, the COUNTY OF TEHAMA (hereinafter called "County"), has conditionally awarded to (here insert full name and address or legal title of Contractor)

_____
_____
_____

As Principal (hereinafter called "Contractor") a Contract for the "Corning Veteran's Hall Remodel Project", in the said Tehama County, in accordance with and consisting in part of plans and specifications prepared by the Nichols, Melburg & Rossetto, 300 Knollcrest Drive, Redding, CA 96002 which Contract also consists of all other parts of the Contract Documents for said project, which Contract is made a part hereof by reference, and is hereinafter referred to as the Contract, and WHEREAS said Contractor is required under the terms of said Contract to furnish a bond for the Faithful Performance of said Contract,

NOW, THEREFORE, we the Contractor and (here insert full name and address or legal title of Surety)

_____
_____
_____

as Surety (hereinafter called "Surety") are held and firmly bound unto County of Tehama, California (hereinafter called "County") in the sum of _____ Dollars ($_____), in lawful money of the United States, for the payment of which sum well and truly to be made Contractor and Surety bind themselves, their heirs, executors, administrators, successors and assigns, jointly and severally, firmly by these presents.

NOW, THEREFORE, THE CONDITION OF THIS OBLIGATION is such that, unless the above bounden Contractor, his heirs, executors, administrators, successors or assigns, shall in all things stand to and abide by, and will and truly keep and perform the covenants, conditions and agreements in additions or alterations thereof made as therein provided, on his or their part, to be kept and performed at the time and in the manner therein specified, and in all respects according to their true intent and meaning, and shall indemnify and save harmless County, Architect and their employees and their consultants, and their agents, as therein stipulated, then this obligation shall be null and void; otherwise it shall remain in full force and effect.

Contractor agrees not to assign this Contract except upon the written consent and approval of the County or their successor and assigns.

And Surety, for value received, hereby stipulates and agrees that no change, extension of time, alteration or addition to the terms of the Contract or to the work to be

performed thereunder or the specifications accompanying the same shall in any way affect its obligations on this bond, and it does hereby waive notice of any such change, extension of time, alteration or addition to the terms of the Contract or to the work or to the specifications.

The Principal and Surety do hereby represent, warranty and guarantee, that the Surety is an "Admitted surety" as that term is, or may be, defined by California statute, regulation or the Department of Insurance.

IN WITNESS THEREOF, the above bounden parties have executed this instrument under their several seals this _____day of _____, 20____, the name and corporate seal of each corporate party being affixed hereto and these presents duly signed by its undersigned representatives, pursuant to its governing body.

SIGNED AND SEALED THIS _____ day of _____, 20_____.

_____
Print name of Contractor

By_____
Signature

_____
Title of Signer

_____
Surety Name

By_____
Attorney-in-Fact
(Acknowledgment by Notary Public required)

_____
Title

(SURETY SEAL)

NOTE TO SURETY COMPANY:

The following form of acknowledgment shall be used. If any other form of acknowledgment is used, there must be submitted a certified copy of unrevoked resolution of authority for the attorney-in-fact for each bond issued.

A notary public or other officer completing this certificate verifies only the identity of the individual who signed the document, to which this certificate is attached, and not the truthfulness, accuracy, or validity of that document.

NOTARY ACKNOWLEDGMENT

STATE OF CALIFORNIA)
) ss.
COUNTY OF _____))

On _____, before me, _____, a
Name of Notary Public

Notary Public in and for said State, personally appeared _____,
Name(s) of Signer(s)

who proved to me on the basis of satisfactory evidence to be the person(s) whose name(s) is/are subscribed to the within instrument and acknowledged to me that he/she/they executed the same in his/her/their authorized capacity(ies), and that by his/her/their signature(s) on the instrument the person(s), or the entity upon behalf of which the person(s) acted, executed the instrument.

I certify under PENALTY OF PERJURY under the laws of the State of California that the foregoing paragraph is true and correct.

WITNESS my hand and official seal

_____ (SEAL)
Notary Public

SECTION 00 61 13.16

LABOR AND MATERIAL PAYMENT BOND

KNOW ALL MEN BY THESE PRESENTS: That WHEREAS, the COUNTY of TEHAMA has awarded to (here insert the full name and address or legal title of Contractor)

_____
_____
_____

hereinafter called "Contractor") a Contract for "**Corning Veteran's Hall Remodel**", in the said Tehama County, in accordance with and consisting in part of plans and specifications prepared by Nichols, Melburg & Rossetto, 300 Knollcrest Drive, Redding, CA 96002, which Contract also consists of all other parts of the Contract Documents for said project, which Contract is made a part hereof by reference, and is hereinafter referred to as the Contract, and WHEREAS said Contractor is required under the terms of said Contract to furnish a bond in connection with said contract, providing that if said Contractor, or any of his subcontractors, shall fail to pay for any materials, provisions, pro vendor or other supplies, or equipment used, upon, for or about the performance of the work contracted to be done, or for any work or labor thereon of any kind, or for amounts due under the Unemployment Insurance Act with respect to such work or labor, then the Surety on this Bond will pay for the same in an amount not exceeding the sum specified in this Bond, and also, in case suit is brought upon the Bond, a reasonable attorney's fee to be fixed by the Court.

NOW, THEREFORE, we the Contractor and (here insert full name and address or legal title of Surety)

_____
_____
_____

as Surety (hereinafter called "Surety") are held and firmly bound unto the County of Tehama, California (hereinafter called "County") in the sum of _____Dollars ($_____), in lawful money of the United States, for the payment of which sum, well and truly to be made, Contractor and Surety bind themselves, their heirs, executors, administrators, successors and assigns, jointly and severally, firmly by these presents.

NOW, THEREFORE, THE CONDITION OF THIS OBLIGATION is such that, if said Contractor, his heirs, executors, administrators, successors or assigns, or his subcontractors, shall fail to pay for any materials, provisions, provender or other supplies, or equipment used in, upon, for or about the performance of the work contracted to be done, or for any work or labor thereon of any kind, or shall fail to pay any other amount due to any person named in Section 9100 of the Civil Code, or shall fail to pay any amounts due under the Unemployment Insurance Act with respect to such work or labor performed by any such person, or for any amounts required to be deducted, withheld, and paid over to the Franchise Tax Board from the wages of employees of the Contractor and his/her subcontractors pursuant to Section 18664 of the Revenue and Taxation Code, with respect to such work and labor, then the Surety on this Bond will pay for the same, in an amount not exceeding the sum specified in this Bond, and also, in case suit is brought upon this Bond, a reasonable attorney's fee to be fixed by the Court.

This Bond shall insure to the benefit of any and all persons, companies, corporations, political subdivisions and State agencies, entitled to file claims under the provisions of Section 9100 of the Civil Code of the State of California, as now in effect and as the same may be

amended or superseded from time to time, so as to give a right of action to them, or their assigns, if any suit is brought upon this Bond.

And the said Surety, for value received, hereby stipulates and agrees that no change, extension of time, alteration or addition to the terms of the Contract or to the work to be performed thereunder or the specifications accompanying the same shall in any way affect its obligations on this Bond, and it does hereby waive notice of any such change, extension of time, alteration or addition to the terms of the contract or to the work or to the specifications.

The Principal and Surety do hereby represent, warranty and guarantee, the Surety is an "Admitted Surety" as that term is, or may be defined by California statute, regulation or the Department of Insurance.

IN WITNESS WHEREOF, the above bounden parties have executed this instrument under their several seals this _____ day of _____, 20____, the name and corporate seal of each corporate party being affixed hereto and these present duly signed by its undersigned representative, pursuant to authority of its governing body.

SIGNED AND SEALED THIS _____ day of _____, 20_____

_____
Print name of Contractor

By_____
Signature

_____
Title of Signer

_____
Surety Name

By_____
Attorney-in-Fact
(Acknowledgment by Notary Public required)

_____
Title

(SURETY SEAL)

NOTE TO SURETY COMPANY:

The following form of acknowledgment shall be used. If any other form of acknowledgment is used, there must be submitted a certified copy of unrevoked resolution of authority for the attorney-in-fact for each bond issued.

A notary public or other officer completing this certificate verifies only the identity of the individual who signed the document, to which this certificate is attached, and not the truthfulness, accuracy, or validity of that document.

NOTARY ACKNOWLEDGMENT

STATE OF CALIFORNIA)
) ss.
COUNTY OF TEHAMA))

On _____, before me, _____, a
Name of Notary Public

Notary Public in and for said State, personally appeared _____,
Name(s) of Signer(s)

who proved to me on the basis of satisfactory evidence to be the person(s) whose name(s) is/are subscribed to the within instrument and acknowledged to me that he/she/they executed the same in his/her/their authorized capacity(ies), and that by his/her/their signature(s) on the instrument the person(s), or the entity upon behalf of which the person(s) acted, executed the instrument.

I certify under PENALTY OF PERJURY under the laws of the State of California that the forgoing paragraph is true and correct.

WITNESS my hand and official seal

_____ (SEAL)
Signature of Notary Public

Instructions for Complying with CA Green Building Code Requirements for New Construction, Non-Residential and Residential Additions and Alterations

The California Green Building Code (Green Building Code) requires at least 50% of jobsite debris generated by projects be recycled, reused or otherwise diverted from landfill disposal for:

1. All New Construction,
2. Residential additions or alterations where the addition or alteration increases the building's conditioned area, volume, or size, and
3. Non-Residential additions and alterations of 1,000 square feet or greater, and/or building alterations with a permit valuation of $200,000 or above (for occupancies within the authority of California Building Standards Commission).

To comply with the Green Building Code the permit holder shall:

1. Submit a completed Waste Management Plan prior to issuance of a building or demolition permit.
2. Submit a completed Waste Management Plan Final Report within 30 days after project completion.
3. Demonstrate that at least 50% (by weight or volume, not both) of jobsite debris was diverted from disposal in a landfill by providing receipts and/or gate tags from all facilities and service providers used for recycling, reuse and disposal of jobsite debris.

Waste Management Plan

Complete the Waste Management Plan form to:

1. Indicate the types of debris expected to be generated from the project (lumber, dry wall, metal, inerts, cardboard, etc). Use the "other" line to write materials not listed. (fixtures, carpet, etc.)
2. Specify whether each material will be recycled, reused or disposed by checking the designated box.
3. Provide the name of each facility or service provider to be used to manage each type of debris. (if a commodity is to be reused on site, like dirt, so state)

Example **(2)**

MATERIAL (1)	Reuse	Recycle	Dispose	**FACILITIES/SERVICE PROVIDERS TO BE USED (3)**
Inerts	**X**			On site reuse of dirt, concrete
Lumber		**X**		ABC Disposal Co. – To TC/RB Landfill wood pile
Plant/Tree Debris		**X**		Acme Tree Service – grind up for mulch
Dry Wall			**X**	ABC Disposal Co. - Small pieces not suitable for reuse/recycling (see Mixed Waste)
Metal		**X**		XYZ Scrap Metal Co. – Separate bin on site
Cardboard		**X**		ABC Disposal Co. – Separate bin on site
Other: Mixed Waste			**X**	ABC Disposal Co. – Other debris to TC/RB Landfill.
Other: Fixtures	**X**			Habitat for Humanity – Lighting & plumbing fixtures

Submit completed Waste Management Plan to the Tehama County/Red Bluff Landfill Management Agency (in person or via certified mail) before debris is removed from jobsite.

The party securing the construction and/or demolition permit must sign the Waste Management Plan. Their signature serves as an acknowledgement that they understand the requirements of the Green Building Code, including demonstrating achievement of the diversion requirement, and that the permit holder is responsible for the actions of their contractors, subcontractors and other agents with regard to all the requirements. A Waste Management Plan will not be approved if it does not provide all of the information required. The Agency Manger of the Tehama County/Red Bluff Landfill Management Agency will make a recommendation to the local Building Official to either approve or disapprove of the Waste Management Plan. The local Building Official, as the Enforcement Agency, will make the final determination of plan approval. If the Waste Management plan is not approved, the local Building Official shall notify the permit holder with suggested revisions. If circumstances are such that the applicant believes it is not feasible to attain a 50% diversion level, then the applicant can submit in writing, a request for an exemption or revision of the 50% diversion requirement.

Waste Management Plan Final Report

Complete the Waste Management Plan Final Report form to:

- Indicate the types of debris that were actually generated from the project
- Provide the quantity of each type of material (by weight)
- Specify whether each material type was reused, recycled or disposed
- Provide the name of each facility or service that was actually used to reuse, recycle or dispose of each type of debris material
- Attach copies of receipts or gate tags for all materials to verify their destination or use
- provide any additional information (including photographs) that the permit holder believes is relevant to determining compliance with the ordinance requirements

Within 30 days of completion of the project, the permit holder shall submit the completed Waste Management Plan Final Report (in person or via certified mail) and the required documentation to the Tehama County/Red Bluff Landfill Management Agency to demonstrate achievement of the diversion requirement.

All construction and demolition debris should be weighed using scales. When weighing is not practical due to small size or other considerations, a volumetric conversion may be used. CalRecycle Conversion tables can be accessed at:
http://www.ciwmb.ca.gov/LGLibrary/dsg/ApndxI.htm#Conversion

The Waste Management Plan Final Report will be reviewed and determination made whether the permit holder achieved the diversion requirement for the project and has demonstrated compliance. The report will be returned to the permit holder no later than 30 days indicating if the project either: fulfilled compliance, did not fulfill compliance or if more information is required.

COMPLETED PLANS & REPORTS MUST BE SUBMITTED TO:

Tehama County/Red Bluff Landfill Management Agency
19995 Plymire Rd.
Red Bluff, CA 96080

Questions?

Questions regarding the Green Building Code can be directed to:

Landfill Agency Manager
Tehama County/Red Bluff Landfill Management Agency
19995 Plymire Rd.
Red Bluff, CA 96080
(530) 528.1103

Construction Waste Management Plan Tips:

Please Contact the Tehama County/Red Bluff Landfill Management Agency for a copy of the "Construction and Demolition Debris Reuse and Recycling Program" Brochure. The brochure outlines the following:

- Covered Project
- Items that need to be separated
- Tips on How to Separate Construction and Demolition Materials
- Useful Websites
- Locations that accept the following:
    - Dimensional Lumber and wood waste,
    - Roofing materials,
    - Vegetative Waste/Soil
    - Brick
    - Concrete and Asphalt
    - Scrap Metal
    - Cardboard

Please note the following:

- Segregated loads of clean asphalt, concrete, brick, and dirt/soil up to 5 cubic yards are accepted free of charge at the Tehama County/Red Bluff Landfill. Dirt/soil does not contribute to the diversion requirement or LEED credit.
- It is recommended that construction sites place separate containers for employee food waste. Construction and Demolition materials contaminated with food waste can not be recycled/salvaged and will not contribute to the diversion requirement. Beverages and other liquid wastes can be particularly harmful to materials that may absorb these products, eliminating their ability to be recycled.

- Treated wood is not accepted at the Tehama County/Red Bluff Landfill.
- Metal is accepted at a reduced tipping fee at the Tehama County/Red Bluff Landfill. Other locations may accept it for free or even pay for it.
- Segregated loads of cardboard are accepted free of charge at the Tehama County/Red Bluff Landfill.
- The CA Green Building Code requires 50 % diversion for new residential and non-residential construction projects. The Green Building Code does not require 50% diversion for demolition projects.
- LEED certification requires at a minimum 50% diversion for construction and demolition projects. This is a voluntary certification program.
- The City of Red Bluff requires all construction and demolition projects greater than or equal to 5,000ft.^{2} and city-sponsored projects greater than or equal to 500 ft.^{2} divert 50% of their waste stream.

Submit completed form in person or by certified mail to:
Tehama County/Red Bluff Landfill Management Agency
Attn: Agency Manager
19995 Plymire Rd.
Red Bluff, CA 96080

TEHAMA COUNTY/RED BLUFF LANDFILL MANAGEMENT AGENCY
GREEN BUILDING CODE WASTE MANAGEMENT PLAN:
Pre-Construction Plan form

APN:_____ **Building Permit #**_____

Owner Name:_____

Owner Mailing Address: _____ **Owner Phone**: (____)_____

Jobsite Address: _____ **Project Sq. Ft.**:_____ **Project Type**: D Construction D Remodel/ Alteration

Jobsite Contact: _____ **Company**: _____ **Jobsite Phone**: (____)_____

Brief description of project: _____**Diversion Goal:**_____**%**
(must be at least 50%)

By signing below, I acknowledge that I am responsible for complying with the Green Building Code Waste Management Plan.

Applicant:
(Owner / Contractor) Signature: _____ **Date**: _____
(Circle)

MATERIAL (1)	(2) Reuse	Recycle	Dispose	FACILITIES/SERVICE PROVIDERS TO BE USED (3)
Inert Material (Concrete, asphalt, dirt)				
Lumber				
Plant/Tree Debris				
Dry Wall				
Metal				
Cardboard				
Other:_____				
Total				

Waste Management Plan recommended for approval : ___Yes_____No_____ **Date:**_____

Agency Mgr. Signature

Please refer to the Tehama County Recycling Directory (AT&T Yellow Pages) for local recycling service providers.
Also, refer to the Tehama County/Red Bluff Landfill website at:www.tehamacountylandfill.com. Answers to questions regarding this form and additional information can be found by calling (530) 528-1103.

Submit completed form in person or by certified mail to:
Tehama County/Red Bluff Landfill Management Agency
Attn: Agency Manager
19995 Plymire Rd.
Red Bluff, CA 96080

TEHAMA COUNTY/RED BLUFF LANDFILL MANAGEMENT AGENCY

GREEN BUILDING CODE WASTE MANAGEMENT PLAN FINAL REPORT

Final inspection will not be scheduled until completed report submitted

APN:_____ **Building Permit #**_____

Owner Name:_____ **Owner Phone**: (____)_____

Jobsite Address: _____ **Project Type**: D Construction D Remodel or Alteration **Project Sq. Ft.:** _____

Jobsite Contact: _____ **Company**: _____ **Jobsite Phone**: (____)_____

MATERIAL	Reuse Tonnage	Recycle Tonnage	Disposal Tonnage	ACTUAL FACILITIES/SERVICE PROVIDERS USED
Inert Material (Concrete, asphalt, dirt)				
Lumber				
Plant/Tree Debris				
Dry Wall				
Metal				
Cardboard				
Other:_____				
Other:_____				

Total tons of material disposed of (not recycled or reused) _____

Total tons of material not disposed (either recycled of reused) _____

Percent recycled/reused _____%

Attach copies of weight receipts, gate tags, or other verifying information for all materials that were reused, recycled or disposed.

Please sign indicating that the above information is true and correct to the best of your knowledge:

(Owner or Contractor):_____ **Date:**_____

Circle which

Final Report returned with comments:_____(

Please note the following Solid Waste Conversion Factors:

Material	Density (lbs/cy)
Cardboard	100
Gypsum Wallboard	500
Mixed Waste	350
Rubble	1,400
Steel	1,000
Wood	300

Final Report recommended for approval : Yes No _ **Date:**_____

Agency Mgr. Signature

SECTION 00 72 00

GENERAL CONDITIONS

TABLE of CONTENTS

Article 1 - DEFINITIONS

Article 2 - PRELIMINARY MATTERS
Execution of Agreement
Delivery of Bonds
Copies of Documents
Contractor's Pre-start Representations
Commencement of Time; Starting the Project
Before Starting Construction

Article 3 - CORRELATION, INTERPRETATION, AND INTENT OF CONTRACT DOCUMENTS

Article 4 - AVAILABILITY OF LAND, PHYSICAL CONDITIONS, *AND* REFERENCE POINTS
Availability of Lands
Physical Conditions
Reference Points

Article 5 - BONDS AND INSURANCE
Contractor's Liability Insurance
Builders Risk Insurance
Performance, Payment and Other Bonds
Responsibility for Damage

Article 6 - CONTRACTOR'S RESPONSIBILITIES
Supervision and Superintendent
Verified Reports
Labor, Materials and Equipment
Substitute Materials or Equipment
Subcontractors
Patent Fees and Royalties
Permits
Laws and Regulations
Taxes
Use of the Premises
Record Drawings
Safety and Protection
Shop Drawings and Samples
Cleaning
Indemnification
Books and Records

Article 7 - WORK BY OTHERS

Article 8 - COUNTY'S RESPONSIBILITIES
Project Manager
Disputes Resolution
Disputed Work
Claims Submission and Documentation
Decisions on Claims
Release of Undecided Claims
Exhaustion

Article 9 - ARCHITECT'S STATUS DURING CONSTRUCTION
Visits to the Site
Clarifications and Interpretations
Rejecting Defective Work
Shop Drawings and Samples
Limitations on Architect's Responsibilities

Article 10 - CHANGES IN WORK

Article 11 - CHANGE OF CONTRACT PRICE
Contract Price
Force Account Payment
Contract Change Order Form

Article 12 - CHANGE OF THE CONTRACT TIME
Contract Time
Liquidated Damages

Article 13 - WARRANTY AND GUARANTEE;
TEST AND INSPECTIONS;
CORRECTION, REMOVAL OR
ACCEPTANCE OF DEFECTIVE WORK
Warranty and Guarantee
Tests and Inspections
Access to Work
Uncovering the Work
County May Stop the Work
Correction or Removal of Defective Work
One-Year Correction Period
Acceptance of Defective Work
Work Neglected by Contractor

Article 14 - PAYMENTS AND COMPLETIONS
Schedules
Application for Progress Payment
Contractor's Warranty of Title
Approval of Payments
Notice of Completion
Partial Utilization
Final Inspection

Final Application for Payment
Approval of Final Payment
Contractor's Continuing Obligation
Waiver of Claims
Price Reduction for Defective Cost or Pricing Data
Covenant Against Contingent Fees
Gratuities

Article 15 - SUSPENSION OF WORK AND TERMINATION
County May Suspend Work
County May Terminate

Article 16 - MISCELLANEOUS
Giving Notice
General

Article 17 - EQUAL OPPORTUNITY

Article 18 - STATE LAWS

ARTICLE 1 - DEFINITIONS

Whenever used in these General Conditions or in the other Contract Documents, the following terms have the meanings indicated which are applicable to both the singular and plural thereof:

1.1 Agreement - The written and signed contract between the County and the General Contractor that is entitled "Agreement."

1.2 Application for Payment - The form furnished by the County to be used by the Contractor in requesting progress payment. This includes the schedule of values and an affidavit of Contractor that progress payments received on account of the work have been applied by Contractor to discharge in full all of the Contractor's obligations as reflected in prior Applications for Payment and otherwise.

1.3 Architect - The person licensed by the State of California (architect or engineer) who is fully responsible for the Contract Drawings and Project Manual, Addenda and modifications.

1.4 Bid - The offer or proposal of the bidder submitted on the prescribed form setting forth the prices for the work to be performed.

1.5 Bidder - Any person, firm or corporation, licensed in the State of California, submitting a bid for the work.

1.6 Bonds - Bid, performance, and *labor and material* payment bonds and other instruments of security, including lien and stop-notice bonds, furnished by the Contractor and his Surety in accordance with the Contract Documents.

1.7 Calendar Day (or "Day") - A day of twenty-four hours measured from one midnight to the next midnight, Pacific time. Unless otherwise indicated, a "day" shall mean a calendar day.

1.8 Change Order - A written order, issued by the Project Manager to Contractor, signed by the Project Manager, Architect and County authorizing an addition, deletion or revision in the work, or an adjustment in the contract price or the contract time.

1.9 Contract Completion Date - The date established in the Contract Documents for the completion of the construction phase of the project, namely, the Estimated Completion Date and Fixed Completion Date.

1.10 Contractor - The person, firm or corporation with whom County has executed the Agreement and who is fully responsible for the performance of the work.

1.11 Contract Documents - The Agreement, Addenda, Contractor's Bid, the Bonds, and Notice of Award, these General Conditions, Supplementary Conditions, Specifications, Plans, Drawings and Modifications. The Contract Documents form the Contract for Construction. This Contract represents the entire and integrated agreement between the parties and supersedes all prior negotiations, representations, or agreements, either written or oral. The Contract may be modified or amended only by a Modification as defined in these General Conditions.

1.12 Contract Price - The total amount stated in the Agreement as payable to Contractor for the performance of the work under the Contract Documents, including authorized adjustments thereto.

1.13 Contract Time - The total amount stated in the Agreement for the completion of the work.

1.14 County – County of Tehama, a public entity organized and existing pursuant to the laws of the State of California and the Owner of the Project.
1.15 Drawings - The drawings and/or plans which show the character and scope of the work to be performed, and which have been prepared or approved by the Architect and are referred to in the Contract Documents.

1.16 Field Order - A written order issued by the Project Manager which clarifies or interprets the Contract Documents in accordance with paragraph 9.2, or orders minor changes in the work in accordance with paragraph 11.3.

1.17 Furnish - To “supply and deliver to the Project site, ready for unloading, unpacking, assembly, installation, and similar operations.”

1.18 General Conditions - That part of the Contract Documents which sets forth many of the rights, responsibilities and relationships of the parties involved or of the contract.

1.19 General Requirements - The General Requirements are contained in Division 1 of the Specifications in these Contract Documents. The General Requirements are the administrative functions which the Contractor is bound to perform by the Contract.

1.20 Inspector - An authorized representative of the Tehama County who is assigned to make a detailed inspection of any or all portions of the work or materials thereof.

1.21 Install - Describes operations at project site including the actual “unloading, unpacking, assembly, erection, placing, anchoring, applying, working to dimension, finishing, curing, protecting, cleaning, and similar operations.”

1.22 Instructions to Bidders - That part of the Bidding Requirements which contain the format of the bid, and the availability of the Contract Documents.

1.23 Notice of Award - The written notification to the Contractor, from the Owner, of the Owner's intent to execute the Contract.

1.24 Notice to Bidders - A notice contained in the Bidding Requirements informing prospective bidders of the opportunity to submit bids on a project and setting forth the procedures for doing so.

1.25 Notice to Proceed - The written notice given by the County to Contractor fixing the date on which Contractor shall start to perform his obligations under the Contract Documents.

1.26 O.P.C.I. - Owner purchased/Contractor receives, stores, and installs.

1.27 Per - In accordance with or in compliance with.

1.28 Progress Payment - Payment for work completed by measuring the work in place and applying the percentage complete of the measured amount to a previously agreed unit cost to determine the total payment.

1.29 Project - The entire work to be performed as provided in the Contract Documents.

1.30 Project Manager - The authorized representative of Tehama County.

1.31 Project Manual - A part of the Contract Documents containing Introductory Information, Bidding Requirements, Contracting Requirements, Specifications, and Opening and Room Finish Schedules bound in one or more volumes.

1.32 Project Work Schedule - A diagram showing proposed times of starting and completing various elements of the work.

1.33 Provide - "To furnish and install, complete and ready for the intended use."

1.34 Punch List - A list, made near the completion of work, indicating items to be furnished or work to be performed by the Contractor or Subcontractor in order to complete the work as specified in the Contract Documents.

1.35 Schedule of Values - A statement furnished by the Contractor to the Project Manager reflecting the portions of the contract sum allotted for the various parts of the work.

1.36 Shop Drawings - All drawings, diagrams, illustrations, brochures, schedules and other data which are prepared by the Contractor, a subcontractor, manufacturer, supplier or distributor and which illustrate in detail the equipment, material or some portion of the work.

1.37 Specifications - The portion of the Contract Documents consisting of written technical descriptions of materials, equipment, construction systems, standards and workmanship as applied to the work.

1.38 Subcontractor - An individual, firm or corporation having a direct contract with the Contractor, or with any other subcontractor, for the performance of a part of the work.

1.39 Substantial Completion, Date of - The date as certified by the County in a Notice of Completion pursuant to paragraph 14.8 of these General Conditions.

1.40 Work - The completed construction in the manner required by the Contract Documents. This includes without limitation all labor, services, and supervision necessary or appropriate to produce such construction, all materials, supplies and equipment incorporated or to be incorporated in such construction, and all obligations, duties and responsibilities with respect to such construction set forth in the Contract Documents.

1.41 Working Day - Any day not a legal holiday, Saturday or Sunday.

ARTICLE 2 - PRELIMINARY MATTERS
2.1 Execution of Agreement:

2.1.1 The Agreement and such other Contract Documents as designated by the County, shall be executed in three counterparts and delivered by the Contractor to the County within fifteen (15) days of the Notice of Award. County will execute and deliver one counterpart to Contractor within ten (10) days of receipt of the executed Agreement from Contractor.

2.2 Delivery of Bonds:

2.2.1 Prior to execution of the Agreements by the Contractor, Contractor shall deliver to County such Bonds as he is required to furnish in accordance with the Contract Documents.

2.3 Copies of Documents:

2.3. 1 County shall furnish to Contractor 5 copies of the Contract Documents for the execution of the work. Additional copies will be furnished at cost of reproduction upon request.

2.4 Contractor's Pre-Start Representations:

2.4.1 Contractor represents that he has familiarized himself with, and assumes full responsibility for having familiarized himself with, the nature and extent of the Contract Documents, work, locality and with all local conditions including federal, state and local laws, ordinances, rules and regulations that may in any manner affect performance of the work, and represents that he has correlated his study and observations with the requirements of the Contract Documents.

2.4.2 Contractor also represents that he has familiarized himself with all surveys and investigation reports of surface and latent physical and that he has correlated the results of all such data with the requirements of the Contract Documents.

2.5 Commencement of Time; Starting the Project

2.5. 1 The contract time will commence on the date fixed by the Notice to Proceed. The Contractor shall start to perform the work under the Contract Documents on or before the tenth working day after the date assigned in the Notice to Proceed.

2.5.2 The provisions set forth in Section VI of the Agreement are incorporated by reference as if fully set forth herein.

2.6 Before Starting Construction:

2.6. 1 The Contractor shall carefully study and compare the Contract Documents; check and verify pertinent figures shown thereon; and verify all applicable field measurements prior to undertaking each part of the work. He shall at once report in writing to the Project Manager any conflict, error or discrepancy which he may discover. Contractor shall be responsible for exercising reasonable care and skill in reviewing the Contract Documents to determine whether there is any conflict, error or discrepancy therein, and shall be responsible for notifying the Project Manager. No claim for additional compensation shall be made by the Contractor for extra work created by Contract Document conflicts, errors or discrepancies which a reasonable Contractor would have discovered prior to commencing work.

2.6.2 Contractor shall submit the required Schedule of Values and activity cost information in accordance with the General Requirements of these specifications.

2.6.3 The Contractor shall furnish the County all certificates of insurance required by the Contract Documents after the "Notice of Conditional Award" and prior to the "Notice to Proceed," in types and amounts set forth in Article 5.

ARTICLE 3 - CORRELATION, INTERPRETATION, AND INTENT OF CONTRACT DOCUMENTS

3.1 It is the intent of the Contract Documents to describe a complete project to be constructed. As stated in paragraph 1.11, the Contract Documents comprise the entire contract between County and Contractor. They may be altered only by a Modification, as defined in paragraph 1.11.

3.2 The Contract Documents are complementary, and what is required by any one shall be as binding as if required by all. Work not specifically covered in the Contract Documents shall nonetheless be required if it is consistent therewith and is reasonably inferable therefrom as being necessary or appropriate to produce the intended results. Should the Contractor discover a conflict, error, or discrepancy in the Contract Documents, he (she) shall immediately call it to the attention of the County in writing before proceeding with the work affected. Contractor agrees that proceeding with work without first giving such notice shall constitute a waiver by Contractor of any claim for additional time or money. Where there is a conflict, the Contract Documents, Specifications shall govern over the drawings; figure dimensions and drawings shall govern over scale drawings. Words and abbreviations that have technical or trade meanings are used in the Contract Documents in accordance with such recognized meanings.

ARTICLE 4 - AVAILABILITY OF LANDS, PHYSICAL CONDITIONS, *AND* REFERENCE POINTS

4.1 Availability of Lands:

4.1.1 County shall furnish the lands upon which the work is to be done, right-of-way for access thereto, and other such lands which are designated in the Contract Documents for the use of the Contractor. Contractor shall provide all additional lands and access thereto that may be required for temporary construction facilities or storage of materials and equipment.

4.2 Physical Conditions:

4.2.1 The Contractor shall immediately, and before any such conditions are disturbed, notify the Project Manager in writing of subsurface or latent physical conditions at the site differing materially from those indicated in the Contract Documents; or unknown and unforeseen physical conditions at the site, of an unusual nature, differing materially from those ordinarily encountered and generally recognized as inherent in work of the character provided for in the Contract Documents. The Project Manager shall promptly investigate the conditions, and if he finds that such conditions do materially so differ to cause an increase or decrease in the time required for performance of the work, an appropriate adjustment in Contract Time may be made in accordance with Article 12 of these General Conditions. The Contract Documents may be modified by Change Order accordingly. In no event shall Contractor be entitled to increased compensation for such differing conditions, unless provided for in such Change Order.

4.2.2 No increase of time under paragraph 4.2 shall be allowed unless the Contractor shall have given the written notice described in paragraph 4.2.1 not later than 24 hours after such conditions are discovered, and before such conditions are disturbed. Contractor shall not proceed with the work affected by such conditions until directed in writing by Project Manager. Furthermore, no increase shall be given unless it is shown that Contractor's own investigation was done competently and did not disclose the error or condition. Failure of Contractor to give written notice and providing an opportunity for the Project Manager to investigate shall constitute a waiver by Contractor of any claim for additional time or money.

4.2.3 Groundwater, in whatever amount or condition, shall be deemed usual and ordinarily encountered and generally recognized as inherent in the work of the character provided for in the Contract Documents. Dewatering is the responsibility of the Contractor. No claim for a Modification of Contract time or price will be allowed for such conditions.

4.3 Reference Points:

4.3.1 County shall provide engineering reference points as shown on the plans for construction. Contractor shall be responsible for surveying and laying out work unless otherwise provided in the Contract Documents, and shall protect and preserve the established reference points and shall not change or relocate them without the prior written approval of Project Manager. Contractor shall report to Project Manager whenever any reference point is lost or destroyed or requires relocation because of changes in grades or locations. The cost of replacing and accurately relocating all reference points so lost, destroyed or moved shall be borne by the Contractor.

ARTICLE 5 - BONDS AND INSURANCE

5.1 Contractor's Liability Insurance

5.1.1: Contractor shall obtain and maintain continuously comprehensive general liability insurance and/or other insurance necessary to protect the public with limits of liability of not less than $1,000,000 combined single limit bodily injury and property damage per occurrence with a $1,000,000 combined single limit annual aggregate with appropriate coverage endorsements to include broad-form contractual, broad form property damage, contractor's protective, product/completed operations, auto and non-owned auto, personal injury, and fire-legal liability where applicable. The general aggregate limit shall apply separately to this project, or Contractor shall provide insurance with a general aggregate limit of $2,000,000.

5.1.2 The Contractor, upon notification of receipt by the County of any cancellation notice shall file with the County a replacement certificate with another insurance company meeting the financial requirements of the County and the coverage requirements. Failure to maintain any of the above required insurance shall require the immediate discontinuation of work until replacement insurance is furnished to the County. All payments due or that become due will be withheld until notice of replacement is received. Any failure to maintain insurance will be sufficient cause for termination of the contract.

5.1.3 Automobile Liability Insurance: Contractor shall carry Bodily injury and Property Damage liability including coverage for owned, hired and non-owned automobiles. The limits of liability shall be not less than $1,000,000 Bodily Injury, $300,000 Property Damage or $1,000,000 Combined Single Limit Bodily Injury and Property Damage

5.1.4 As evidence of the insurance required by this agreement, certificates of workers compensation, general liability and automobile liability shall be furnished to the County before any work is commenced by the Contractor.

5.1.5 General Liability and Automobile Liability insurance shall include "County of Tehama, its elected officials, officers, and employees as an additional insured", and shall not be reduced or canceled without 30 days written prior-notice certain to the County. Contractor shall provide the County a certificate of insurance and an additional insured endorsement as evidence of insurance protection provided which lists "County of Tehama" as the certificate holder. Insurance certificates provided by any insurance company or underwriter shall not contain the language "endeavor to" and "but failure to mail such notice shall impose no obligation or liability of any kind upon the company", or similar language. If Contractor has employees, he/she shall obtain and maintain continuously workers' compensation insurance to cover Contractor and Contractor's employees and partners.

5.1.6 Contractor shall require and verify that all subcontractors of any tier maintain insurance meeting all the requirements stated herein, and Contractor shall ensure that "County of Tehama, its elected officials, officers, and employees" is an additional insured on insurance required from

subcontractors; provided, however, that the minimum limit by subcontractors for general aggregate under their comprehensive general liability shall be $1,000,000 on all subcontracts other than major subcontracts and $3,000,000 on major subcontracts (subcontracts in excess of $1,000,000 and such other subcontracts identified in the Contract Documents as "major subcontracts"). Contractor shall maintain certificates of insurance from all subcontractors demonstrating compliance with the requirements of this section and make them available to the County upon request.

5.2 Builders Risk Insurance

The Contractor will not be required to obtain Builder's Risk Insurance. The Contractor will be responsible for building materials not installed and for the Contractor's tools, other equipment or supplies. The Contractor shall also be required to protect the construction project as stipulated elsewhere in this contract.

5.3 Performance, Payment, and Other Bonds

5.3.1 Prior to the commencement of any work, Contractor shall furnish performance and payment bonds as security for the faithful performance and payment of all Contractors' obligations under the contract documents. These bonds shall be in amounts at least equal to the contract price and in a form satisfactory to County. Surety company providing said bonds shall have a Best financial rating of at least A-: VII and be licensed in the State of California.

5.3.2 If at any time the Surety on any bond furnished by Contractor is adjudicated bankrupt, commences any proceeding under the Bankruptcy law of the United States, becomes insolvent, makes a general assignment for the benefit of creditors or has its right to do business terminated in California, or for any other reason is unable or unwilling to continue in business, Contractor shall within five calendar days thereafter substitute another bond in a Surety who meets the County's financial rating requirement.

5.4 Responsibility for Damage:

5.4.1 Approval of the Contractor's insurance by the Owner shall not decrease the extent to which the Contractor or any subcontractor may be held responsible for payment of any and all damages resulting from Contractor's operations.

5.4.2 The Contractor shall assume the defense of and indemnity and save harmless Tehama County, its elected officials, officers and employees, as well as the Project Manager, Architect and the officers, agents and employees of each of them, from any and all loss, liability or damage including attorney's fees and from all suits, actions, damages or claims of every nature and description to which they may be subjected or put by reasons of injury to persons or property arising out of, in connection with, or incident to the execution of the work or resulting from the active or passive negligence or carelessness on the part of the Contractor, Contractor's employees or agents in the delivery of materials and supplies by its employees or agents, including any failure to fulfill the terms of all laws and regulations which apply to this Contract together with any infringement or alleged infringement of the patent rights of any person or persons, firm or corporation in consequence of the use in or about the said work of any article or materials; and the County shall have the right to estimate the amount of such damage and to cause the Contractor to pay same, and the amount to be paid for such damage shall be deducted from the money due to the Contractor under this Contract; or the whole or so much of the money due or to become due to the Contractor under this Contract, as may be considered necessary by the County, shall be retained by the County until such suits or claims for damages shall have been settled or otherwise disposed of and satisfactory evidence to that effect furnished to the County. Contractor shall

assume the defense of and indemnity and save harmless Tehama County, its elected officials, officers and employees, as well as the Architect, Project Manager and the officers, agents and employees of each of them in respect to any mechanics lien, foreclosure actions filed by any subcontractor or material man relative to the construction.

ARTICLE 6 - CONTRACTOR'S RESPONSIBILITIES

6.1 Supervision and Superintendent:

6.1.1 Contractor shall supervise and direct the work effectively, efficiently and with his best skill and attention. He shall have sole responsibility for the means, methods, techniques, sequences, procedures of construction, and for coordinating all portions of his work under the Contract Documents. Contractor shall be responsible for the finished work complying accurately with the Contract Documents.

6.1.2 The Contractor shall designate in writing, before starting work, the name, qualifications and experience of his proposed representative who must be approved by the Project Manager. Said representative shall have authority to represent and to act for the Contractor. Said authorized representative shall be present at the site of work at all times while work is in progress. Arrangements for responsible supervision, acceptable to Project Manager, shall be made for emergency work required during periods when work is suspended.

6.1.3 The Contractor shall notify the Project Manager, in writing, when he desires to change his representative. He shall provide all necessary information regarding his new representative when submitting request for approval. Any substitute representative shall require the approval of the Project Manager, which may not be unreasonably withheld.

6.1.4 In emergencies when the Contractor or his authorized representative is not present on any particular part of the work, directions will be given by the Project Manager and obeyed by the superintendent or foreman in charge of the particular work. Such directions will be confirmed in writing to the Contractor's authorized representative.

6.1.5 The Contractor shall identify, in writing, the individuals who are authorized to sign Change Orders to the Contract.

6.1.6 The Contractor shall remove his representative from the work and propose a substitute if Project Manager reasonably concludes that such representative is unable or unwilling to properly supervise the work in such a manner as to ensure its timely and successful completion in accordance with Contract Documents.

6.1.7 The Contractor shall maintain daily job site activity logs which record: location and number of all manpower on the site by his own and subcontractors' forces; all work being performed and whether such work is part of the base contract or change order; all work being performed and whether such work is part of the base contract or change order; all construction equipment in use, and not in use, and reasons why not in use; weather and site conditions; and delays or obstructions to the work. The Contractor shall sign the log representing that the information contained therein is true, accurate and complete.

6.2 Verified Reports

6.2.1 The Contractor shall completely fill out, sign and date the appropriate Verified Reports, as required by Sections 4-214, 4-240 and 4-249 of Title 24, Part I, California Code of Regulations. Copies of these reports shall be sent to the County.

6.3 Labor, Materials and Equipment

6.3.1 Contractor shall provide competent, suitable qualified personnel to survey and lay out the work and perform construction as required by the Contract Documents. Contractor shall at all times enforce strict discipline and good order on the project. He shall not employ on the work any unfit person or anyone not skilled in the task assigned to him.

6.3.2 Contractor shall furnish all materials, equipment, labor, transportation, and machinery, tools, appliances, other facilities and incidentals necessary for the execution, testing, initial operation and completion of work.

6.3.3 All materials and equipment incorporated in the work shall be new, except as otherwise provided in the Contract Documents. If required by Architect or Project Manager, Contractor shall furnish satisfactory evidence as to the kind, quality, source and purchase of materials and equipment.

6.3.4 All materials and equipment shall be applied, installed, connected, erected, used, cleaned and conditioned in accordance with the instruction of the applicable manufacturer, fabricator or processors.

6.4 Substitute Materials or Equipment:

6.4.1 The Specifications may permit Contractor to furnish or use a substitute that is equal to any material or equipment specified. Unless otherwise expressly provided in the Specifications, in accordance with Public Contract Code section 3400, whenever the contract documents refer to a named manufacturer or named product, the named manufacturer or named product shall be deemed to be followed by the words “or equal” so that bidders may furnish any equal material, product, thing, or service in accordance with the procedures set forth herein. If the Contractor wishes to furnish or use a proposed substitute, he shall, promptly and within 5 days of the Notice to Proceed, make written application to the Architect for approval of such substitute, certifying and warranting in writing that the proposed substitute will perform the functions called for by the Contract Documents, be of the same quality as that specified and be suited to the same use. Contractor shall state whether or not its incorporation in or use in connection with the project is subject to payment of any license fee or royalty and also shall identify all variations of the proposed substitute from that specified and indicate available maintenance service. No substitute shall be ordered or installed without the written approval of the Architect whose decision as to substitutions shall be final and conclusive. Architect may require Contractor to furnish other such data about the proposed substitute that Architect considers pertinent.

6.4.2 No substitution shall be ordered or installed without such supplemental performance guarantee and bonds as County may require, all of which shall be furnished at Contractor's expense. Contractor shall be responsible for determining the required delivery date for incorporation into the work and shall certify that this date has been confirmed with the supplier of the substituted item.

6.5 Subcontractors:

6.5.1 Contractor shall investigate and assure himself and the County of the experience and skill of all subcontractors performing work specified by the Contract Documents as well as the financial stability of such subcontractors. Contractor shall not recommend any subcontractor or other person or firm, whether initially or as a substitution against whom County, at County's sole discretion, may have

reasonable objection. If County who has no duty to investigate, but has the right to do so, after due investigation, has a reasonable objection to any subcontractor, supplier or material man proposed by Contractor, Contractor shall propose an acceptable substitute.

6.5.2 Contractor shall be fully responsible for all acts and omissions of his subcontractors, and of persons and organizations directly or indirectly employed by them and of persons and organizations for whose acts any of them may be liable to the same extent that he is responsible for the acts and omissions of persons directly employed by him. Nothing in the Contract Documents shall create any contractual relationship between the County, Project Manager or Architect and any subcontractor, or other person or organization having a direct contact with the Contractor, nor shall it create any obligation on the part of County, Project Manager or Architect to pay or see to the payment of any monies due any subcontractor or other persons or organizations.

6.5.3 The divisions and sections of the Specifications and the identifications of any Drawings shall not control the Contractor in dividing the work among subcontractors or delineating the work to be performed by any specific trade. Neither the Architect, nor Project Manager, nor County will act as arbiter to determine subcontract limits.

6.5.4 Contractor agrees to bind specifically every subcontractor to the applicable terms and conditions of the Contract Documents for the benefit of the County including, but not limited to, all time and notification requirements.

6.5.4 All work performed for Contractor by a subcontractor shall be pursuant to an appropriate agreement between Contractor and subcontractor which shall contain provisions for the waiver of all rights the contracting parties may have against one another for damages caused by fire or other perils covered by insurance. Contractor shall pay each subcontractor a just share of any such insurance moneys received by Contractor.

6.6 Patent Fees and Royalties

6.6.1 Contractor shall pay license fees and royalties and assume all costs incident to the use, in the performance of the work, of any invention, design, process, product or device which is the subject of patent rights or copyrights held by others. If a particular invention, design, device or product is specified in the Contract Documents for use in the performance of the work, and to the actual knowledge of County and Architect its use is subject to patent rights or copyrights calling for the payment of any license fee or royalty to others, the existence of such rights shall be disclosed by County in the Contract Documents. Contractor shall indemnify and hold harmless County, Project Manager, their employees, officers and agents, and Architect, his consultants, and anyone directly or indirectly employed by either of them from and against consultants' and other experts' fees and expenses arising out of any infringement of patent rights incident to the use in the performance of the work or resulting from the incorporation in the work of any invention, design, process, product or device not specified in the Contract Documents, and shall defend all such claims in connection with alleged infringement of such rights.

6.7 Permits & Utility Costs:

6.7.1 Permits: Contractor shall be responsible to obtain all building permits, construction permits, fugitive dust permits, fees and licenses necessary for the prosecution of the work. The County will make payment of permit fees directly to the permitting agency. The Contractor shall be responsible for all delays in obtaining all permits, licenses, and utility connection agreements. No delay claim may be made by Contractor for any delay in obtaining any permit, license or utility connection agreement.

6.7.2 Utility Costs: Contractor shall be permitted reasonable use of the existing utilities available at the project site without charge. In the event that any additional temporary utilities are necessary, Contractor shall be responsible for obtaining and paying for such temporary utilities at Contractor's expense.

6.8 Laws and Regulations:

6.8.1 Contractor shall give notices and comply with all laws, ordinances, rules and regulations applicable to the work. Contractor shall use reasonable care and skill in determining whether or not the Specifications or Drawings are at variance therewith, and, if he observes such variance, he shall give the Project Manager and Architect prompt written notice thereof. If Contractor performs any work knowing it to be contrary to such laws, ordinances, rules and regulations, and without such notice to the Project Manager and Architect, he shall bear all costs arising therefrom.

6.9 Taxes:

6.9.1 Contractor shall pay all sales, consumer use and other similar taxes required to be paid by him in accordance with the law of the place where the work is to be performed.

6.10 Use of the Premises:

6.10.1 Contractor shall confine his equipment, the storage of materials and equipment and the operations of his workmen to areas permitted by law, ordinance, permits or the requirements of the County and of the Contract Documents, and shall not unreasonably encumber the premises with materials or equipment.

6.10.2 Contractor shall not load nor permit any part of any structure to be loaded with weight that will endanger the structure, nor shall he subject any part of the work to stresses or pressure that will endanger it.

6.11 Record Drawings:

6.11.1 Contractor shall keep one current record copy of all Specifications, Drawings, Addenda, Modifications, and Shop Drawings at the site in good order and annotated to show all changes made during the construction process. These shall be available to the Architect and Project Manager at all times, and shall be reviewed monthly concurrent with the Progress Payment Request. Upon completion of the project the Contractor shall deliver the record documents to the Project Manager for review and approval. These record documents shall be prepared in accordance with Section 01720 of the Specifications.

6.12 Safety and Protection:

6.12.1 Contractor shall be responsible for initiating, maintaining, and supervising all safety precautions and programs in connection with the work. He shall take all necessary precautions for the safety of, and shall provide the necessary protection to prevent damage, injury or loss:

6.12.1.1 All employees on the work and other persons who may be affected thereby:

6.12.1.2 All the work and all materials or equipment to be incorporated therein, whether in storage on or off the site; and

6.12.1.3 Other property at the site or adjacent thereto, including trees, shrubs, lawns, pavements, roadway, structures and utilities not designated for removal, relocation or replacement in the course of construction.

6.12.1.4 The Contractor represents that he has read and is thoroughly familiar with the California State Occupational Safety and Health Act, and regulations for construction promulgated thereunder, and agrees to comply with the Act and all such regulations applicable to the performance of the work. The Contractor accepts the duty of enforcing those regulations by federal, state or County Safety and Health Inspectors at the Contractor's work place at the job site or any area within the limits of construction and of the outcome of any such inspections. Contractor assumes exclusive responsibility for, and agrees to defend, indemnify and hold harmless Tehama County, Project Manager, Architect, and their elected officials, officers, agents, employees, consultants and representatives against all consequences of any violations of those regulations by the Contractor, including the payment of any fine, penalty and interest assessed in connection therewith, any court costs, undertakings, interest, and attorneys', accountants' consultants' and experts' expenses and fees incurred by the County.

6.12.2 Contractor shall comply with all applicable laws, ordinances, rules, regulations and orders of any public body having jurisdiction for the safety of persons or property or to protect them from damage, injury or loss. He shall erect and maintain, as required by the conditions and progress of the work, all necessary safeguards for its safety and protection. He shall notify owners of adjacent utilities when prosecution of the work might affect them. All damage, injury or loss to any property caused, directly or indirectly, in whole or in part, by Contractor, and/or subcontractor, or anyone employed by them shall be remedied by Contractor at his own expense. Contractor's duties continue until such time as all the work is completed and Project Manager has issued a notice in accordance with paragraph 14.9 that work is acceptable.

6.12.3 Contractor shall designate a responsible member of his organization, at the site, satisfactory to the Project Manager, whose duty shall be the prevention of accidents. This person shall be Contractor's superintendent unless otherwise designated in writing by Contractor to Project Manager.

6.13 <u>Shop Drawings, Product Data, and Samples</u>:

6.13.1 Shop drawings, product data, and/or samples are required by the Specifications for certain portions of the work. These shall be submitted according to a schedule of submittals to be accepted by the Project Manager and Architect. Where a shop drawing, product data, or sample submittal is required by the Specifications, no related work shall be commenced until the submittal has been reviewed by the Architect. A copy of each reviewed shop drawing and each approved sample shall be kept in good order by Contractor at the site and shall be available to the Project Manager, Architect and Inspector.

6.13.2 The Contractor may submit a request for substitutions. The Contractor shall propose for approval all samples as specified or directed by the Architect. The provisions of subparagraph 6.4 shall apply in such case.
6.13.3 Contractor shall check and verify all field measurements and submit shop or setting coordination drawings in 1/4"=1'0" scale to verify clearances for various trades, and schedules required for the work of the various trades, with such promptness as to cause no delay to the work.

6.13.4 Samples: Unless otherwise specified, submit samples in triplicate and of adequate size to show the quality, type and finish. Label each sample with the manufacturer's name, material name and quality, the Contractor's name, the project name and other pertinent data. Submit, with samples in

triplicate a transmittal letter requesting approval. Prepay transportation charges to the Architect's office on samples forwarded.

6.13.5 Contractor shall not order materials until receipt of written approval of shop drawings, product data, and samples.

6.13.6 Project Manager's or Architect's review of shop drawings and samples shall not relieve Contractor from his responsibility for any deviation from the requirements of the Contract Documents. Nor shall any action by Architect relieve Contractor from any responsibility for errors or omissions in the shop drawings.

6.14 Cleaning:

6.14.1 Contractor shall keep the premises free from accumulations of waste materials, rubbish and other debris resulting from the work, and at the completion of the work he shall remove all waste materials, rubbish and debris from and about the premises, as well as all tools, construction equipment and machinery, and surplus materials. He shall leave the site clean and ready for occupancy by County. Contractor shall restore to original condition those portions of the site not designated for alteration by the Contract Documents.

6.15 Indemnification:

6.15.1 Contractor shall indemnify and hold harmless to the fullest extent permitted by law, Tehama County, Architect, Project Manager and their elected officials, officers, consultants, agents and employees, from and against all claims, damages, losses and expenses, including attorneys', accountants', consultants', and experts' fees and expenses, arising out of or resulting from the performance of the work attributable to bodily injury, sickness or death, or to injury to or destruction of tangible property, including the loss of use resulting therefrom, and caused in whole or in part by any negligent or other act or omission of Contractor, any subcontractor, anyone directly or indirectly employed by any of them or anyone for whose acts any of them may be liable, regardless of whether indemnification shall extend to claims, demands, or liability for injuries occurring after completion of the project as well as during the work's progress. Such obligation shall not be construed to negate, abridge or otherwise reduce any other obligation of indemnity which otherwise exists under the Contract Documents or at law as to any party or person described in this paragraph or otherwise.

6.15.2 In any and all claims against Tehama County, Architect, Project Manager, their elected officials, officers, employees, consultants or agents by an employee of Contractor, any subcontractor, anyone directly or indirectly employed by any of them or anyone for whose acts any of them may be liable, the indemnification obligation under subparagraph 6.15.1 shall not be limited in any way by any limitation on the amount or type of damages, compensation or benefits payable by or for Contractor or any subcontractor under workmen's compensation acts, disability acts or other employee benefit acts.

6.16 Books and Records:

6.16.1 Contractor shall maintain books, records, documents and other evidence pertinent to the work in accordance with generally accepted accounting principles and practices. Such books, records, documents and other evidence shall be maintained for at least three years after the date of completion of the project. Access to the aforementioned books, records, documents and other evidence shall be available to the County or the Board, or any authorized representative of either, during the course of construction and for at least three years after completion of the project. Suitable facilities shall be provided for said access, and for the inspection and copying thereof.

ARTICLE 7 - WORK BY OTHERS

7.1 County may perform additional work related to the project or it may award other direct contracts therefore. Contractor shall afford the other persons or contractors who are parties to such direct contracts reasonable opportunity for the storage of materials and equipment and the execution of work. He shall properly connect and coordinate his work with theirs. No claim for time extension will be made by the Contractor due to any alleged problems or difficulties suffered due to work performed by others unless written notice within twenty-four hours of the commencement of said alleged delaying activities is given to the County.

7.2 If any part of Contractor's work depends, for proper execution or results, upon the work of any other such person or contractor, Contractor shall inspect and promptly report to Project Manager and Architect in writing any defects or deficiencies in such work that render it unsuitable for such proper execution and results. His failure so to report shall constitute an acceptance of the other work as fit and proper for the relationship of his work, except as to defects and deficiencies which may appear in the other work after the execution of his work.

7.3 Contractor shall do all cutting, fitting, and patching of his work that may be required to make the several parts come together properly and fit to receive or be received by such other work. Contractor shall not endanger any work of others by cutting, excavating or otherwise altering their work, and will only cut or alter their work with the written consent of the County and of the other contractors whose work will be affected.

7.4 If the performance of additional work by other persons or contractors is not noted in the Contract Documents prior to the execution of the Agreement, written notice thereof shall be given to Contractor prior to starting any such additional work.

ARTICLE 8 - COUNTY'S RESPONSIBILITIES

8.1 Communications: County will forward all instructions and decisions to Contractor through the Project Manager.

8.2 Right to Stop Work: The County has the right to stop or suspend work, and to award other work.

8.3 Project Manager

8.3.1 The County will designate a Project Manager and assistants to enable it to carry out its responsibilities at the site. The Project Manager is the County's agent and shall act as directed by and under the supervision of the County Administrator.

8.3.2 The Project Manager will be the County's sole authorized representative for the project. All correspondence to Architect from Contractor will be copied to the Project Manager.

8.4 Disputes Resolution

8.4.1 A dispute, or claim, or other matter in question arising out of or relating to the Contract Documents which is not disposed of by agreement shall be decided by the Project Manager promptly and in writing as provided in the Contract Documents. The decision of the Project Manager shall be final and conclusive on the Contractor unless, within 5 days from the receipt of such decision,

Contractor submits to Project Manager a written claims submission and documentation as defined in paragraph 8.6 below.

8.5 Disputed Work

8.5.1 Should Contractor object to any decision, order, directive, notice, action, or omission of Project Manager, Contractor may, within 5 days after receipt or occurrence of the same, or before commencing with the disputed work, whichever occurs first, furnish to Project Manager a written notice stating such objections.

8.5.2 Contractor shall furnish to Project Manager, beginning with the first day and at the end of each day detailed hourly records for labor, construction equipment, and services; and itemized records of materials and equipment used that day in performance of the disputed work. Such records shall be of a form approved by Project Manager. Such records shall be signed by Contractor and verified by Project Manager.

8.5.3 Failure by Contractor to furnish such written notice and records specified in 8.5.1 and 8.5.2 shall constitute a waiver of Contractor's right to furnish a claim for the disputed work.

8.6 Claims Submission and Documentation

8.6.1 Contractor may furnish a claim concerning a matter noticed in accordance with 8.5 to Tehama County Administrative Office, 727 Oak Street, Red Bluff CA 96080.

8.6.2 Contractor shall furnish 3 certified copies of claim documentation. The claim documentation shall be complete when furnished. The evaluation of the Contractor's claim will be based on County's records and the Contractor's furnished claim documentation.

8.6.3 Claim documentation shall conform to generally accepted auditing standards and shall be in the following format:

1. General Introduction
2. General Background
3. Issues
   a) Index of Issues
   b) For each Issue
      1) Background
      2) Chronology
      3) Contractor's Position (reason for County's potential liability)
      4) Supporting Documentation of Merit
      5) Supporting Documentation of Damages
4. Critical Path Method Schedules, As-Planned and As-Built
5. Productivity Exhibits
6. Summary of Issues and Damages

8.6.4 Supporting documentation of merit for each issue shall be cited by reference, photocopied, or explained. Supporting documentation may include, but not be limited to general conditions, technical specifications, drawings, correspondence, conference notes, shop drawing, survey books, inspection reports, delivery schedules, test reports, daily reports, subcontracts, fragmentary critical path method

schedules, photographs, technical reports, requests for information, field instructions, and other related records.

8.6.5 Supporting documentation of damages for each issue shall be cited, photocopied, or explained. Supporting documentation may include but not be limited to certified detailed labor, materials, equipment, and construction equipment and services costs; purchase orders; invoices; project as-planned and as-built costs; subcontractor payment releases; quantity reports; other related records; general ledger and any other accounting materials.

8.6.6 Each copy of claim documentation shall include the following certification:

1. I certify under penalty of perjury, according to the laws of the State of California that this claim is made in good faith, that the supporting documentation is accurate and complete to the best of my knowledge and belief; and that the amount requested accurately reflects the contract adjustments for which County is responsible.

2. Certification shall be signed in the same manner as the proposal was signed.

8.6.7 Should Contractor be unable to support any part of the claim and it is determined that such inability is attributable to falsity of such certification or misrepresentation of fact or fraud on the part of Contractor, Contractor shall be liable to County for three times the amount of damages which the County sustains, plus the cost of civil action and may be liable to the County for a civil penalty of up to ten thousand dollars for each false claim.

8.7 Decisions on Claims

8.7.1 Claims of Contractor arising under and by virtue of the contract will be decided by the County Steering Committee consisting of the County Administrator, County Counsel, the Architect and the Project Manager who will furnish the decisions to Contractor in writing.

8.8 Release of Undecided Claims

8.8.1 Undecided claims furnished to County Steering Committee before execution of the final release of claims provided in 8.6 and not excepted therefrom shall be deemed released by Contractor upon execution of such release and will not be further considered by County.

8.9 Exhaustion

8.9.1 Contractor must exhaust all remedies and comply with all dispute resolution procedures set forth in paragraph 8.4 prior to filing suit which names the County, Architect, Project Manager or any officer, employee, agent or affiliate thereof.

ARTICLE 9 - ARCHITECT'S STATUS DURING CONSTRUCTION

9.1 Visits to Site:

9.1.1 Progress and quality of the executed work and to determine if the work is proceeding in accordance with the Contract Documents. However, the Architect will not be required to make exhaustive or continuous on-site observations to check quality or quantity of the work. On the basis of on site observations as an Architect, the Architect will keep the Project Manager informed of progress of the work, and will endeavor to guard the County against defects and deficiencies in the work.

9.1.2 Architect and his representatives will have access to the work at all times for the observation of the building operations, including the right to accept or reject materials and/or workmanship. The Architect and his representatives shall perform their duties in accordance with Section 4-213 and 4-217, Title 24, California Code and Regulations.

9.1.3 In cases of emergency the Architect may give directions to the Contractor, his authorized representative, or if neither are available, to the superintendent or foreman in charge of the particular work concerning which directions are given. Such directions will be confirmed in writing by the Project Manager.

9.2 Clarifications and Interpretations:

9.2.1 Architect will issue with reasonable promptness through the Project Manager such written Field Orders, which will clarify or interpret the design intent of the Contract Documents as he may determine to be necessary. These Field Orders shall not entitle Contractor to any adjustment to the contract price or time.

9.3 Rejecting Defective Work:

9.3.1 Architect and/or the Project Manager will have authority to disapprove or reject work which is "defective" (which term includes without limitation work that is unsatisfactory, faulty, does not conform to the requirements of the Contract Documents, does not meet the requirements of any inspection, test or approval referred to in paragraph 13.2, or has been damaged prior to approval of final payment). He will also have authority to recommend to the Project Manager that he require special inspection or testing of the work as provided in paragraph 13.4, whether or not the work is fabricated, installed or completed.

9.4 Shop Drawings and Samples:

9.4.1 The Architect is responsible for the review of samples. (See paragraph 6.13)

9.4.2 The Contractor shall submit for review, with reasonable promptness, all samples as specified or directed by the Architect. The Architect shall review samples, with reasonable promptness, only for conformance with the design concept of the project and for compliance with information given in the Contract Documents. The work shall be in accordance with reviewed samples.

9.5 Shop Drawings

9.5.1 The Architect shall review, with reasonable promptness, schedules and drawings for conformance with the design concept of the project and compliance with the Contract Documents. The Architect's review of such drawings or schedules shall not relieve the Contractor from responsibility for deviations from Drawings and Specifications, nor shall it relieve him from responsibility for errors in shop drawings or schedules.

9.5.2 Architect shall be permitted a reasonable time to review such drawings and no claim for time extension or damages will be allowed for this time.

9.5.3 Satisfactory shop drawings shall be so identified by Architect, dated, and a reproducible copy returned to the Contractor.

9.5.4 Should shop drawings be rejected, one reproducible copy set will be returned to the Contractor with indicated corrections and changes to be made. After making such corrections and changes, Contractor shall resubmit shop drawings, in numbers of copies required, until approval is obtained. Any corrections or changes indicated on the shop drawings shall not be considered as an extra work order.

9.6 Architect will be the interpreter of the design and technical requirements of the Contract Documents and the compliance by the Contractor therewith. Neither the Project Manager, Architect, nor County will be liable to the Contractor for the result of any interpretation or decision rendered in good faith. Disputes with respect to interpretations will be processed and resolved as provided for in paragraph 8.4.

9.7 Limitations on Architect's Responsibilities

9.7.1 Neither Architect's authority to act under this Article 9 or elsewhere in the Contract Documents, nor any finding or decision made by him in good faith, shall give rise to any duty or responsibility of Architect to Contractor, any subcontractor, any material man, fabricator, supplier or any of their agents or employees or any other person performing any of the work.

9.7.2 Architect will not be responsible for Contractor's means, methods, techniques, sequences, division and allocation of the work or procedures of construction, or the safety precautions and programs incident thereto, and he will not be responsible for Contractor's failure to perform the work in accordance with the Contract Documents.

9.7.3 Architect will not be responsible for the acts or omissions of Contractor, or any subcontractors, or any of his or their agents or employees, or any other persons at the site or otherwise performing any of the work.

9.7.4 Nothing in these General Conditions or in the Contract Documents shall be deemed to establish a contractual relationship, direct or otherwise, between Architect and Contractor.

ARTICLE 10 - CHANGES IN THE WORK:

10.1 The County may at any time or from time to time order additions, deletions or revisions in the general scope of the work without invalidating the Contract Documents and without notice to the sureties.

10.2 Changes will be authorized by a Change Order. Upon receipt of a Change Order, Contractor shall immediately proceed with the work involved. All such work shall be executed under the applicable conditions of the Contract Documents. If any Change Order causes an increase or decrease in the contract price or any extension or shortening of the contract time, an adjustment will be made as provided in Articles 11 and 12, on the basis of a claim made by either Contractor or County.

10.3 Changes, Omissions, or Additions shall be made only through a standard written order of the Architect and approved by the Owner. Change Orders will be issued only before or at the time of change, and the expense or responsibility for any change or damage without said order shall rest entirely with the Contractor.

10.4 County may order minor changes or alterations in the work not involving extra costs or extension of time, and not inconsistent with the overall intent of the Contract Documents. Such changes may be ordered by a Field Order.

10.5 When necessary, in order to avoid delay to the work, the Project Manager may authorize the Contractor to proceed with the work pending completion of a change order. This prior authorization may be verbal; however, it must be confirmed in writing as soon as possible by the authorizing individual. Whenever work is to proceed on the basis of such prior authorization, the Contractor must be notified in writing to proceed with the work pending approval of the change order. In the case of a change order requested by the Contractor, the County must have positive assurance that he will execute the change order before allowing work to proceed. Preparation and final approval of change orders for work covered under prior authorization must be actively pursued. Prior authorization does not include authority to make payment for the work.

10.6 No claims for adjustment of contract price or time for delays or costs due to material shortage, transportation difficulties, labor shortage, or dewatering, will be paid by County except as defined in *sub*paragraphs 12.1.2 and 12.1.3.

10.7 Additional work performed by Contractor without authorization of a change order shall be at his own expense. Contractor shall not be entitled to an increase in the contract price or an extension of the contract time, except in the case of an emergency as provided in subparagraphs 6.1.4 or 9.1.3, for such work performed without a change order.

10.8 The County may order changes in the work. Notwithstanding any dispute or controversy that may arise in connection with a claim for adjustment of contract price, in the event of such changes Contractor shall proceed with the work promptly and diligently upon written order from Project Manager. The contract price may be changed pursuant to Article 11 without notice to the Surety.

10.9 In the event that there is any dispute between County and Contractor with relation to any payment to be made under this contract, whether by reason of change order; progress payment; or otherwise, Contractor shall submit a claim pursuant to Articles 11 and 12 but will not be entitled to walk off the job or stop work in any manner and is under a full obligation to complete each and every term and condition of the contract.

10.10 Dispute resolutions provisions of paragraphs 8.5 and 8.6 are applicable to changes in the work except as in Articles 11 and 12.

ARTICLE 11 - CHANGE OF CONTRACT PRICE

11.1 Contract Price:

11.1.1 The Contract Price constitutes the total amount payable to Contractor for performing the work under the Contract Documents. All duties, responsibilities and obligations assigned to or undertaken by Contractor in respect to work under the Contract Documents shall be at his expense without change of the Contract Price.

11.1.2 If Contractor wishes to make a claim for an increase to the contract price, he shall give Project Manager written notice thereof not later than five (5) days after the occurrence of the event giving rise to such claim. Within ten (10) days thereafter, Contractor shall supply all supporting documents for such claim, including but not limited to time slips for labor and time slips for equipment. Failure to provide all supporting documents shall constitute a waiver of such claim by Contractor.

11.1.3 The written notice shall set forth the reasons for which the Contractor believes additional compensation is due, the nature of the costs involved and the amount thereof. The notice must be

given to the Project Manager prior to Contractor's performing the work-giving rise to the claim for additional compensation.

11.1.4 Differences between the parties arising under and by virtue of the contract shall be brought to the attention of the respective parties at the earliest possible time in order that such matters may be promptly settled. The Contractor hereby agrees that he shall have no right to additional compensation for any claim for which written notice was not filed in strict compliance with this paragraph.

11.2 The cost or credit to the County resulting from a change in the work, from a prior authorization, or from any claim for an increase or decrease in the contract price shall be determined by the Project Manager in one of the following ways:
11.2.1 By a lump sum properly itemized, and showing direct cost and markup, and supported by such substantiating data as may be required by the Project Manager to permit evaluation; allowable markup shall not in any case exceed the amount set forth below:

1. For work performed by the Contractor's own forces, for changes up to $30,000.00, an additional 10% for overhead and 5% for profit may be added;

2. For changes in excess of $30,000, the sums in excess of $30,000 are allowed an additional 8% for overhead and 5% for profit;

3. For work performed by subcontractors, the subcontractors' billings shall be limited to the markups as described for the Contractor, except the Contractor may add 10% to the gross amount as set forth by the subcontractor, as his fee for coordinating and implementing such changed work by the subcontractor;

4. Overhead includes, but is not limited to, the costs of bonds, insurance, supervision, office expense, management, transportation and small tools allowance.

11.2.2 Where the work involved is related to unit prices, by application of unit prices to quantities involved; or

11.2.3 On the basis of force account as provided for in paragraph 11.3 which shall be employed only at the Project Manager's sole discretion, which shall not be an election of the Contractor.

11.2.4 All work undertaken by prior authorization shall be on the basis of force account, until and unless a lump sum is agreed upon.

11.3 Force Account Payment - When extra work is to be paid for on a force account basis, the labor, materials, and equipment used in the performance of such work shall be subject to the approval of the Project Manager and compensation will be determined as follows:

11.3.1 Work Performed by Contractor - The Contractor will be paid the direct costs for labor, materials and equipment used in performing the work determined as hereinafter provided in Sections "Labor," "Materials" and "Equipment Rental," except where agreement has been reached to pay in accordance with Section "Work Performed by Special Forces or Other Special Services."

11.3.2 To the total direct costs computed as provided in Sections "Labor," "Materials," and "Equipment Rental," there will be added a markup as defined in paragraph 11.2.1.

11.3.3 The above markups shall constitute full compensation for all overhead costs which shall be deemed to include all items of expense not specifically designated as cost or equipment rental in Sections "Labor," "Materials," and "Equipment Rental." The total payment made as provided above shall be deemed to be the actual cost of such work and shall constitute full compensation therefore.

11.3.4 When extra work paid for on a force account basis is performed by forces other than the Contractor's organization, the Contractor shall reach agreement with such other forces as to the distribution of the payment made by the Owner of such work. No additional payment therefore will be made by the Owner by reason of the performance of the work by a subcontractor or other forces.

11.3.4.1 Labor - The Contractor will be paid the cost of labor for the workmen (including foremen when authorized by the Project Manager) used in the actual and direct performance of the work. The cost of labor, whether the employer is the Contractor, subcontractor, or other forces, will be the sum of the following:

11.3.4.2 Actual Wages - The actual wages paid shall include any employer payments to or on behalf of the workmen for health and welfare, pension, vacation, and similar purposes.

11.3.4.3 Labor Surcharge - To the actual wages, as defined in Section 11.4.2 will be added a labor surcharge set forth in the Department of Transportation publication entitled Labor Surcharge and Equipment Rental Rates, which is in effect on the date upon which the work is accomplished and which is part of the contract. Said labor surcharge shall constitute full compensation for all payments imposed by State and Federal laws, specifically worker's compensation, social security, Medicare, Federal unemployment insurance, State unemployment insurance and State training taxes, and for all other payments made to, or on behalf of, the workmen, other than actual wages as defined in Section 11.4.2 and subsistence and travel allowance as specified in Section 11.3.4.4.

11.3.4.4 Subsistence and Travel Allowance - The actual subsistence and travel allowance paid to such workmen.

11.3.4.5 Materials - The Owner reserves the right to furnish such materials as it deems advisable, and the Contractor shall have no claims for costs and markup on such materials.

Only materials furnished by the Contractor and necessarily used in the performance of the work will be paid for. The cost of such materials will be the cost to the purchaser, whether Contractor, subcontractor, or other forces, from the supplier thereof, except as the following are applicable:

11.3.4.6 If materials are procured by the purchaser by any method which is not a direct purchase from and a direct billing by the actual supplier to such purchaser, the cost of such materials shall be deemed to be the price paid to the actual supplier as determined by the Project Manager plus the actual costs, if any, incurred in the handling of such materials.

11.3.4.7 If the materials are obtained from a supply or a source owned wholly or in part by the purchaser, the cost of such materials shall not exceed the price paid by the purchaser for similar materials furnished from said source on contract items or the current wholesale price for such materials delivered to the job site, whichever price is lower.

11.3.4.8 If the cost of such materials is, in the opinion of the Project Manager, excessive, then the cost of such materials shall be deemed to be the lowest current wholesale price at which such materials are available in the quantities concerned delivered to the job site, less any discounts as provided in Section 11.4.1.

11.3.4.10 Equipment Rental - The Contractor will be paid for the use of equipment at the rental rates listed for such equipment in the Department of Transportation publication entitled Labor Surcharge and Equipment Rental Rates, which is in effect on the date upon which the work is accomplished and which is a part of the contract, regardless of ownership and any rental or other agreement, if such may exist, for the use of such equipment entered into by the Contractor. If it is deemed necessary by the Project Manager to use equipment not listed in the said publication, a suitable rental rate for such equipment will be established by the Project Manager. The Contractor may furnish any cost data, which might assist the Project Manager in establishment of such rental rates.

The rental rates paid as above provided shall include the cost of fuel, oil, lubrication, supplies, small tools, necessary attachments, repairs, and maintenance of any kind, depreciation, storage, insurance, and all incidentals.

Operators of rented equipment will be paid for as provided in Section 11.4.1(1) "Labor."

All equipment shall, in the opinion of the Project Manager, be in good working condition and suitable for the purpose for which the equipment is to be used.

Unless otherwise specified, manufacturer's ratings and manufacturer's approved modifications shall be used to classify equipment for the determination of applicable rental rates. Equipment that has no direct power unit shall be powered by a unit of at least the minimum rating recommended by the manufacturer.

Individual pieces of equipment or tools not listed in said publication and having a replacement value of $150 or less, whether or not consumed by use, shall be considered to be small tools and no payment will be made therefore.

Rental time will not be allowed while equipment is inoperative due to breakdowns.

11.3.4.11 Equipment on the Work - The rental time to be paid for equipment on the work shall be the time the equipment is in operation on the extra work being performed, and in addition, shall include the time required to move the equipment to the location of the extra work and return it to the original location or to another location requiring no more time than that required to return it to its original location, except that moving time will not be paid for if the equipment is used at the site of the extra work on other than such extra work. Loading and transporting costs will be allowed, in lieu of moving time, when the equipment is moved by means other than its own power, except that no payment will be made if equipment is used at the site of the extra work on other than such extra work.

The following shall be used in computing the rental time of equipment on the work:

(1) When hourly rates are listed, less than 30 minutes of operation shall be considered to be ½ hour of operation.

(2) When daily rates are listed, less than 4 hours of operation shall be considered to be ½ day of operation.

11.3.4.12 Equipment Not on the Work - For the use of equipment moved in on the work and used exclusively for extra work paid for on a force account basis, the Contractor will be paid the rental rates listed in the Department of Transportation publication entitled Labor Surcharge and Equipment Rental Rates, which is in effect on the date upon which the work is accomplished and which is a part of the contract, and for the cost of transporting the equipment to the location of the work and its return to its original location, all in accordance with the following provisions:

(1) The original location of the equipment to be hauled to the location of the work shall be agreed to by the Project Manager in advance.

(2) The Owner will pay the costs of loading and unloading such equipment.

(3) The cost of transporting equipment in low bed trailers shall not exceed the hourly rates charged by established haulers.

(4) The cost of transporting equipment shall not exceed the applicable minimum established rates of the Public Utilities Commission.

(5) The rental period shall begin at the time the equipment is unloaded at the site of the extra work, shall include each day that the equipment is at the site of the extra work, excluding Saturdays, Sundays, and legal holidays unless the equipment is used to perform the extra work on such days, and shall terminate at the end of the day on which the Project Manager directs the Contractor to discontinue the use of such equipment. The rental time to be paid per day will be in accordance with the following:

Hours Equipment is in Operation	Hours to be Paid
0	4
0.5	4.25
1	4.5
1.5	4.75
2	5
2.5	5.25
3	5.5
3.5	5.75
4	6
4.5	6.25
5	6.5
5.5	6.75
6	7
6.5	7.25
7	7.5
7.5	7.75
8	8
Over 8	Hours in operation

The hours to be paid for equipment which is operated less than 8 hours due to breakdowns, shall not exceed 8 less the number of hours the equipment is inoperative due to breakdowns.

When hourly rates are listed, less than 30 minutes of operation shall be considered to be ½ hour of operation.

When daily rates are listed, payment for ½ day will be made if the equipment is not used. If the equipment is used, payment will be made for one day.

(6) Should the Contractor desire the return of the equipment to a location other than its original location, the Owner will pay the cost of transportation in accordance with the above provisions, provided such payment shall not exceed the cost of moving the equipment to the work.

(7) Payment for transporting and loading and unloading equipment, as above provided will not be made if the equipment is used on the work in any other way than upon extra work paid for on a force account basis.

When extra work, other than work specifically designated as extra work in the plans and specifications, is to be paid for on a force account basis, and the Project Manager determines that such extra work required the Contractor to move on to the work equipment which could not reasonably have been expected to be needed in the performance of the contract, the Project Manager may authorize payment for the use of such equipment at equipment rental rates in excess of those listed as applicable for the use of such equipment subject to the following additional conditions:

(a) The Project Manager shall specifically approve the necessity for the use of particular equipment on such work.

(b) The Contractor shall establish to the satisfaction of the Project Manager that such equipment cannot be obtained from his normal equipment source or sources and those of his subcontractors.

(c) The Contractor shall establish to the satisfaction of the Project Manager that the proposed equipment rental rate for such equipment from his proposed source is reasonable and appropriate for the expected period of use.

(d) The Project Manager shall approve the equipment source and the equipment rental rate to be paid by the County before the Contractor begins work involving the use of said equipment.

11.3.4.13 Owner-Operated Equipment - When owner-operated equipment is used to perform extra work to be paid for on a force account basis, the Contractor will be paid for the equipment and operator, as follows:

Payment for the equipment will be made in accordance with the provisions in Section 11.3.4.10, "Equipment Rental."

Payment for the cost of labor and subsistence or travel allowance will be made at the rates paid by the Contractor to other workmen operating similar equipment already on the project, or in the absence of such workmen, at the rates for such labor established by collective bargaining agreements for the type of workman and location of the work, whether or not the owner-operator will be added to the cost of labor described herein, in accordance with provision in Section 11.3.4.3 "Labor Surcharge."

To the direct cost of equipment rental and labor, computed as provided herein, will be added the markups for equipment rental and labor as provided for in Section 11.3.1 "Work Performed by Contractor."

11.4.1 Work Performed by Special Forces or Other Special Services - When the Project Manager and the Contractor, by agreement, determine that a special service for an item of extra work cannot be performed by the forces of the Contractor or those of any of his subcontractors, such services or extra work item may be performed by a specialist. Invoices for such service of item of extra work on the basis of the current market price thereof may be accepted without complete itemization of labor, material and equipment rental costs when it is impractical and not in accordance with the established practice of the special service industry to provide such complete itemization.

In those instances wherein a Contractor is required to perform extra work necessitating a fabrication or machining process in a fabrication or machine shop facility away from the job site, the

charges for that portion of the extra work performed in such facility, may, by agreement, be accepted as a specialty billing.

To the specialist invoice price, less a credit to the County for any cash or trade discount offered or available, whether or not such discount may have been taken, will be added 15 percent in lieu of the percentages provided in Section 11.3.1 "Work Performed by Contractor."

11.4.2 Records - The Contractor shall maintain his records in such a manner as to provide a clear distinction between the direct costs of extra work paid for on a force account basis and the costs of other operations.

11.5 The amount of credit to be allowed to County for any change which results in a net decrease in cost of the work, will be the amount of the actual net decrease as determined by the Project Manager. When both additions and credits are involved in any one change, any Contractor's fee under paragraph 11.3.3 shall be calculated on the basis of the net increase, if any.

11.6 Whenever the cost of any work is to be determined pursuant to paragraph 11.3, Contractor will submit in form prescribed by County an itemized cost breakdown together with supporting data.

11.7 Disputes, claims and matters in question arising out of or relating to the interpretation of implementation of Article 11 shall be submitted and resolved in accordance with paragraph 8.5.

11.8 Cash Allowances - NOT APPLICABLE

Contract Change Order Form

11.9 All parties agree that the following form shall be used for all change orders:

CONTRACT CHANGE ORDER NO._____
Date _____
Sheet _____ of_____
_____. You are hereby directed to make the herein-described changes from the plans and specifications, or do the following described work in accordance with applicable provisions of the Contract Documents. Work described herein shall include furnishing of all materials, equipment, labor and services necessary for its completion.

This Change Order constitutes a full accord and satisfaction as to claims for all additional costs and extensions of the contract time relating to the portion of the work described under the term "Item." The execution of this Change Order is a waiver of any rights or claims by the Contractor to any additional compensation for the "Item" work or extensions of the contract time for that work.
ITEM:
The above changes result in the following adjustments to the Contract Price:
Add/Deduct $_____.

Contract Time is increased/decreased/unchanged _____working days by this Change Order.

I, the undersigned Contractor, have given careful consideration to the change proposed and hereby agree to do the work above specified and will accept as full payment therefore the prices shown above.

By_____
CONTRACTOR
By_____
Title
Date_____

Date_____

SUBMITTED BY:

_____
ARCHITECT

RECOMMENDED FOR APPROVAL:

By_____
PROJECT MANAGER

Date_____

APPROVED BY:

COUNTY APPROVAL:

By_____
CHIEF ADMINISTRATOR

Date_____

Distribution:
District (Master)
Contractor (Master)
Architect (Copy)
Project Manager (Copy)

1 of 2 *Change Order __*

CONTRACT CHANGE ORDER NO. _____
PROJECT _____
Date: _____

The Contract is changed as follows:

CCO #	COR #	DESCRIPTION		AMOUNT
		Requested by: Reason:	ADD	
		Requested by: Reason:	ADD	
		Requested by: Reason:	ADD	
		Requested by: Reason:	ADD	
		Requested by: Reason:		
		TOTAL CHANGE ORDER NO. ___	**ADD**	**$0.00**

The original Contract Sum	$0
Net Change by previously authorized Change Orders	$0
The Contract Sum prior to this Change Order	$0
The Contract Sum will be increased by this Change Order in the amount of	$0
The New Contract Sum including this Change Order will be	**$0**
The Contract Time will be extended	(-0-) work days

2 of 2 *Change Order __*

ARTICLE 12 - CHANGE OF THE CONTRACT TIME

12.1 Contract Time

12.1.1 The County may extend, reduce or adjust the contract time without invalidating the Contract Documents and without notice to the Surety. The contract time may only be changed by a change order. Any claim for an extension in the contract time shall be based on written notice to Project Manager within five (5) days of commencement of the event giving rise to the claim. The notice shall set forth the reasons for the delay, the date of its commencement, the extent of the delay, together with such supporting data as may be required by Project Manager. Change in the contract time shall be incorporated in a change order. Failure to present notice of claim in writing within the stated five days constitutes a waiver for any delay claim.

12.1.2 In the event it is deemed necessary to extend the time for completion of the work, such extensions shall in no way release any guarantee given by the Contractor pursuant to the provisions of the Contract Documents, or the contract let hereunder, nor shall such extension of time relieve or release the Sureties on the bonds executed pursuant to said provision. The Sureties in executing such bonds shall be deemed to have expressly agreed to any such extension of time. The amount of time allowed in any extension of time shall be limited to the period of the delay giving rise to the same as determined by the County.

12.1.3 The amount of time extension, if any, to which the Contractor is entitled shall be determined by the Project Manager. No damages of any sort shall be paid to Contractor for delay, disruption, halting, cessation or temporary abandonment, no matter from what cause. Parties acknowledge that on this project, revisions to the plans and specifications will be needed, and Contractor waives, by entering into the Agreement with County, any damages caused by such revision or any other source during the term of this contract. Notwithstanding any dispute which may arise in connection with a claim for adjustment of the contract time, Contractor shall proceed with the work promptly and directly.

12.2 Liquidated Damages

12.2.1 The work prescribed by the Contract Documents must be completed within the time set forth in the Agreement, or damage will be sustained by the County. Any delay could cause delay to operations of the County depriving the County of the scheduled beginning of the use of the facility under construction. The parties hereto recognize that, because of the foregoing special circumstances, it is impractical and extremely difficult to fix the actual damages.

12.2.2 Accordingly, the parties hereto agree, and by execution of the Agreement the Contractor acknowledges that he understands, has ascertained and agrees, that the Contractor shall pay to the County, as liquidated damages, and not as a penalty or forfeiture, the amounts herein set forth for the failure of the Contractor to substantially complete the entire work within the time specified.

12.2.3 Time is therefore of the essence in these Contract Documents and it is imperative that the work included in these Contract Documents be substantially completed within the specified time.

12.2.4 Since it is impossible or extremely impractical, presently, to determine the actual amount of damages which the County will sustain by reason of such delay, it is, therefore, agreed that the Contractor will pay to the County liquidated damages in the amount as set forth in subparagraph 12.2.6, for each and every calendar day beyond the time set forth in the Agreement, as adjusted, until the time of completion as determined in paragraph 14.5. The Contractor agrees to promptly pay such liquidated damages as are herein provided. In case the same are not so paid, Contractor agrees that the County

may deduct the amount thereof from any money due or that may become due the Contractor under the contract.

12.2.5 The parties have endeavored to estimate the actual damages likely to be suffered by the County in the event of a delay in completion beyond the time set forth in the Agreement, and agree that the amount is a reasonable estimate of the County's actual damages and are just and reasonable sums under the circumstances presently existing.

12.2.6 It is agreed that the amount of liquidated damages to be paid by the Contractor to the County for failure to complete the entire work specified by the Contract Completion Date or to meet any deadline set forth in the Agreement for the completion of specified work (as extended, if applicable) is two hundred fifty dollars and no/cents ($250.00) for each calendar day, continuing after the Substantial Completion Date, as indicated in the Agreement, to the date of actual substantial completion, or until the time of completion of the work necessary to meet such a deadline, as the case may be.

12.2.7 In the event the Contractor shall become liable for liquidated damages under this Section, the County in addition to all other remedies provided by law, shall have the right to require the Project Manager to withhold any and all retained percentages of payments, subject to the requirements of Sections 10263 and 22300 of the Public Contracts Code, which would otherwise be or become due the Contractor until the liability of the Contractor under this Section has been finally determined. The County shall have the right to use and apply such retained percentages, in whole or in part, to reimburse the County for all liquidated damages due or to become due to the County. Any remaining balance of such retained percentages shall be paid to the Contractor only after discharge in full of all liability incurred by the Contractor under this Section or otherwise. If the retained percentage is not sufficient to discharge all such liabilities of the Contractor, the Contractor shall continue to remain liable to the County until all such liabilities are satisfied in full.

12.2.8 Such amount will be in each case the actual cash value agreed upon as the loss to the County resulting from the Contractor's default.

12.2.9 Disputes, claims and matters in question arising out of or relating to the interpretation or implementation of Article 12 shall be submitted and resolved in accordance with paragraph 8.4.

ARTICLE 13 - WARRANTY AND GUARANTEE; TEST AND INSPECTIONS; CORRECTION, REMOVAL OR ACCEPTANCE OF DEFECTIVE WORK

13.1 Warranty and Guarantee

13.1.2 Contractor warrants and guarantees to County that all materials and equipment will be unless otherwise specified, all work will be of good quality, free from faults or defects, in accordance with the requirements of the Contract Documents and of any inspections, tests or approvals referred to in paragraph 13.2. All unsatisfactory work, all faulty or defective work, and all work not conforming to the requirements of the Contract Documents at the time of acceptance thereof or of such inspections, tests or approvals shall be considered defective. All defective work, whether or not in place, may be rejected, corrected or accepted as the County may direct.

13.2 Tests and Inspections

13.2.1 If laws, ordinances, rules, regulations or orders of any public authority having jurisdiction require any work to be specifically inspected, tested or approved by some public body, Contractor shall

assume full responsibility therefore, pay all costs in connection therewith, and furnish the Project Manager with the required certificates of inspection, testing or approval. All other inspections, tests and approvals required by the Contract Documents shall be performed by County and the costs be paid by County unless otherwise specified.

13.2.2 Contractor shall give Project Manager and Architect timely notice of readiness of the work for all inspections, tests or approvals. If any such work required so to be inspected, tested or approved is covered before such inspections, tests, or approvals are made, without written approval of the Project Manager, it must, if requested by the Project Manager or Architect, be uncovered for observation, and such uncovering and replacement shall be at Contractor's expense.

13.2.3 Neither observations by Project Manager and Architect nor inspections, tests or approvals shall relieve Contractor from his obligations to perform the work in accordance with the requirements of the Contract Documents.

13.2.4 Any defective work, which may be discovered before final acceptance of the work, shall be corrected immediately by the Contractor, and any unsatisfactory materials shall be rejected, notwithstanding that they may have been overlooked by an inspector. The inspection of the work shall not relieve the Contractor of any of his obligations to perform satisfactory work as herein prescribed.

13.2.5 Failure or neglect on the part of the County or any of its authorized agents to condemn or reject bad or inferior work or materials shall not be construed to imply an acceptance of such work or materials if it becomes evident at any time prior to final acceptance of the work; neither shall it is construed as barring the County at any subsequent time from recovery of damages or of such a sum of money as may be needed to build all portions of the work in which fraud was practiced or improper materials used whenever found.

13.3 Access to Work

13.3.1 The County and its representative and the Architect and his representatives will at all times have access to the work. Contractor shall provide proper and safe facilities for such access and observation of the work and also for any inspection or testing thereof by others.

13.4 Uncovering the Work

13.4.1 Work, which is supposed to be tested prior to covering or inspecting, and which has been covered prior to testing or inspection must, if requested by Project Manager or Architect, be uncovered for observation and replaced at Contractor's expense.

13.4.2 The Project Manager may request any work to be uncovered and inspected and tested. If such work is found to be defective, Contractor shall bear the expense of uncovering, exposure, inspection, testing, correction and recovering. If the work is not found to be defective, Contractor shall be allowed an increase in contract price and, if necessary, an extension of time to cover all-time and cost expended. Such increase and extension shall be granted pursuant to Articles 10, 11, and 12.

13.5 County May Stop the Work

13.5.1 If the work is defective, or Contractor fails to supply sufficient skilled workmen or suitable materials or equipment, or if Contractor fails to make prompt payments to subcontractors or for labor, materials or equipment, County may order Contractor to stop the work, or any portion thereof, until the

cause for such order has been eliminated. This right of County to stop the work shall not give rise to any duty on the part of County to exercise this right for the benefit of Contractor or any other party.

13.6 Correction or Removal of Defective Work

13.6.1 The Project Manager may require the Contractor, prior to approval of final payment, without cost to County and as specified by Project Manager, to either correct any defective work, whether or not fabricated, installed or completed, or, if the work has been rejected by Project Manager or Architect, remove it from the site and replace it with nondefective work. If Contractor does not correct such defective work or remove and replace such rejected work within a reasonable time, all as specified in a written notice from Project Manager, County may have the deficiency corrected or the rejected work removed and replaced by other persons. All direct or indirect costs of such correction or removal and replacement, including compensation for additional professional services, shall be paid by Contractor. Contractor shall also bear the expenses of making good all work of others destroyed or damaged by his correction, removal or replacement of his defective work.

13.6.2 The Contractor shall remove from the site within 48 hours, when so directed by the Project Manager, any materials which are not in conformance with the Contract Documents.

13.7 One Year Correction Period

13.7.1 If, after the approval of final payment and prior to the expiration of one year after the date of Notice of Completion or such longer periods of time as may be prescribed by law or by the terms of any applicable special guarantee required by the Contract Documents, any work is found to be defective, Contractor shall promptly, without cost to County and in accordance with County's written instructions, either correct such defective work, or, if it has been rejected by County, remove it from the site and replace it with nondefective work. If Contractor does not promptly comply with the terms of such instructions, County may have the defective work corrected or the rejected work removed and replaced by other persons and all direct and indirect costs of such removal and replacement, including compensation for additional professional services, shall be paid by Contractor. The requirements of this paragraph shall be cumulative with such other indemnification, warranties and guarantees as provided by the Contract Documents, at law and in equity, and shall not be deemed a limitation of any sort on the rights and remedies of the County against the Contractor

13.7.1.1 The warranties, extended warranties and guarantees in these General Conditions and in the Specification shall be cumulative with such other indemnification, warranties and guarantees as provided by the Contract Documents, or at law or in equity, and shall be deemed a limitation of any sort on the rights and remedies of the County against the Contractor.

13.8 Acceptance of Defective Work

13.8.1 If, instead of requiring correction or removal and replacement of defective work, County prefers to accept it, it may do so. In such case, if acceptance occurs prior to approval of final payment, a change order shall be issued incorporating the necessary revisions in the Contract Documents, including appropriate reduction in the contract price; or, if the acceptance occurs after approval of final payment, an appropriate amount shall be paid by Contractor to County.

13.9 Work Neglected by Contractor

13.9.1 If Contractor fails to prosecute the work in accordance with the Contract Documents, including any requirements of the construction schedule, County may give Contractor written notice. Contractor

shall respond to County within 24 hours' receipt of said notice, and conform to said notice within 7 days. County may, without prejudice to any other remedy it may have, make good deficiencies, and the cost thereof (including compensation for additional professional services) shall be charged against Contractor. If the payments then or thereafter due Contractor are not sufficient to cover such amount, Contractor shall pay the difference to County.

ARTICLE 14 - PAYMENTS AND COMPLETION

14.1 Schedules:

14.1.1 Work Schedule and activity cost data developed in connection therewith as described in the General Requirements. No progress payment will be made until after the Schedule has been updated as of the date of application. The activity cost data will be incorporated into the form of Application for Payment furnished by the County.

14.2 Application for Progress Payment:

14.2.1 Once a month Contractor shall submit to Project Manager and Architect for review an Application for Payment filled out and signed by Contractor covering the work completed as of the date of the application and accompanied by such data, vouchers and schedules as may reasonably be required. No payment shall be made for any work or material not specifically incorporated in the project, except equipment purchased by Contractor, delivered to and stored in a bonded warehouse acceptable to the Owner. Payment for 95% of the invoiced value of such equipment may be made, subject to the inspection by and approval of the Owner. Equipment that qualified for such payment while not incorporated into the work, is limited to: special order transformers, generators, pumps, valves, and motors. Items which are "stock" or "off the shelf" which are readily available are not, under any circumstances, eligible for payment under this provision.

14.2.2 Mobilization, bonds, and insurance premiums will be paid as part of the first progress payment if these costs are identified as part of the cost allocation required under General Requirements, Section 01310. Each subsequent Application for Payment shall include an affidavit of Contractor stating that all previous progress payments received on account of the work have been applied to discharge in full all of Contractor's obligations reflected in prior Applications for Payment and otherwise. Failure to submit any data and affidavits as may be required by this paragraph shall be grounds for rejection of the Application for Payment. This payment will be made pursuant to paragraph 14.11

14.3 Contractor's Warranty of Title:

14.3.1 Contractor warrants and guarantees that title to all work, materials and equipment covered by any Application for Payment, whether incorporated in the project or not, will pass to County at the time of payment, free and clear of all liens, claims, security interests and encumbrances (hereinafter in these General Conditions referred to as "liens"). The County may, at any time, require the Contractor to post, at Contractor's expense, a lien release bond as to any lien filed against the project.

14.4 Approval of Payments:

14.4.1 The Project Manager will, within fifteen days after receipt of each Application for Payment, either indicate in writing his approval for payment or return the application to Contractor indicating his reasons for refusing to approve payment. County shall, within 30 days of presentation to it of an

approved Application for Payment, review said application and if found acceptable in form and amount, pay Contractor the amount approved.

14.4.2 The County will pay 95% of the amount due the Contractor as progress payments. The remaining monies will be paid pursuant to paragraph 14.9.1.

14.4.3 The Contractor may elect to receive 100% of payments due under the contract from time to time, without retention of any portion of the payment by the public agency, by depositing securities of equivalent value with the public agency in accordance with the provisions of Section 4590 of the Government Code. Such securities, if deposited by the Contractor, shall be valued by the public agency's Finance Director (Treasurer), whose decision on valuation of the securities shall be final.

14.4.4 The granting of any progress payment, or the receipt thereof by the Contractor, shall not constitute acceptance of the work or any portion thereof, and shall in no way lessen the liability of the Contractor to replace unsatisfactory work or material, though the unsatisfactory character of such work or material may not have been apparent or detected at the time such payment was made.

14.4.5 It is mutually understood and agreed that when under any provision of this contract the County shall charge any sum of money against the Contractor, the amount of such charge shall be deducted and retained by the County from the amount of the next succeeding progress estimate, or from any other moneys due or that may become due the Contractor on account of the contract. If on completion or termination of the contract such moneys due the Contractor are found insufficient to cover the County's charges against him the County shall have the right to recover the balance from the Contractor or his sureties.

14.4.6 The County may withhold up to 125% of the estimated cost of remedial work from payments otherwise due the Contractor, if in the judgment of the Project Manager or Architect the Contractor has failed to make satisfactory progress on the completion of remedial work, or is otherwise in violation of any requirement, duty, obligation or covenant contained in the Contract Documents. Such withholding is supplementary to the retention amount required by these Contract Documents.

14.4.7 County may refuse to approve the whole or any part of any payment because of subsequently discovered evidence, change in circumstances or the results of subsequent inspections or tests, and may nullify any such payments previously approved to such extent as may be necessary in their opinion to protect County from loss, because:

14.4.7.1 the work is defective, or completed work has been damaged requiring correction or replacement;

14.4.7.2 claims or liens have been filed, or there is reasonable cause to believe such may be filed;

14.4.7.3 the contract price has been reduced because of modification;

14.4.7.4 County has been required to correct defective work or complete the work;

14.4.7.5 of unsatisfactory prosecution of the work including failure to furnish acceptable submittals; or

14.4.7.6 the Contractor has failed to comply with the Contract Documents, direction of County or with the requirements of the law.

14.5 Notice of Completion:

14.5.1 Contractor will certify in writing to County, prior to final payment, that the entire project is substantially complete and request that County issue a Notice of Completion. Within a reasonable time thereafter, Project Manager, Contractor, and Architect shall make a review of completeness. If Project Manager does not consider the project substantially complete, Project Manager will notify Contractor in writing giving his reasons. If Project Manager considers the project substantially complete, Project Manager will prepare a provisional Notice of Completion which shall fix the tentative date of Substantial Completion and the responsibilities for maintenance and utilities. There shall be attached to the provisional certificate a list of items to be completed or corrected before final payment, and the provisional certificate shall fix the time within which such items be completed or corrected, said time to be within the contract time. Section 01700 shall apply to this paragraph.

14.5.2 Contractor shall have seven days after receipt of the provisional certificate during which he may make written objection to Project Manager as to any provisions of the provisional certificate or attached list. If, after considering such objection, Project Manager concludes that the project is not substantially complete, Project Manager will within seven days after submission of the objection notify Contractor thereof in writing stating the reasons. Upon Contractor's completion of the items listed on the provisional certificate, and upon satisfaction of the terms and conditions of the provisional certificate, the Project Manager shall issue a final Notice of Completion, which shall fix date as may be necessary or appropriate. Project Manager's determination of the date of Substantial Completion and other items under this paragraph shall be final and conclusive on Contractor. Section 01700 shall apply to this paragraph.

14.5.3 Project Manager shall have the right to exclude Contractor from the project site after the date of Substantial Completion, but Project Manager shall allow Contractor reasonable access to complete punch list items or perform correction and warranty work.

14.6 Partial Utilization:

14.6.1 Prior to final payment, Project Manager may request Contractor in writing to permit County to use a specified part of the project which it believes it may use without significant interference with construction of the other parts of the project. If Contractor agrees, it will certify to Project Manager and Architect that said part of the project is substantially complete and request Project Manager to issue a certificate of Substantial Completion for that part of the project. Within a reasonable time thereafter Project Manager, Contractor and Architect shall make an inspection of that part of the project to determine its status of completion. If Project Manager determines that such part is substantially complete, Project Manager shall issue a Certificate of Substantial Completion. If Project Manager does not consider that it is substantially complete, Project Manager will notify Contractor thereof in writing, giving its reasons. In case of partial utilization by the County, the provisions of General Requirements Section 01700 will govern with respect to the responsibilities of Contractor and County.

14.6.2 Partial utilization shall not limit any warranty or guarantee by the Contractor, nor shall it constitute a waiver of any right of the County, its successors or assigns.

14.7 Final Inspection:

14.7.1 The Contractor shall give written notice that the project is complete. Project Manager and Architect will make a final review of completeness with Contractor, and will notify Contractor in writing of all particulars in which this review reveals that the work is incomplete or defective. Contractor shall immediately take such measures as are necessary to remedy such deficiencies.

14.8 Final Application for Payment:

14.8.1 The Contractor shall complete all such corrections to the satisfaction of the Project Manager and deliver all maintenance and operating instructions, schedules, guarantees, bonds, certificates of inspection and other documents required by the Contract Documents or by the Project Manager. He may then make application for final payment following the procedure for progress payments. The final Application for Payment shall be accompanied by such data as the Project Manager may reasonably require, together with complete releases - waivers of liens in a form satisfactory to the Project Manager. Contractor shall also be required to furnish receipts or releases in full; and affidavit that the releases and receipts include all labor, all payrolls, material and equipment for which a lien could be filed, and that all payrolls, material and equipment bills, and other indebtedness connected with the work for which County or his property might in any way be responsible, have been paid or otherwise satisfied; and consent of the Surety to final payment. If any subcontractor, material man, fabricator or supplier fails to furnish a release or receipt in full, Contractor may be required at Project Manager's sole discretion to furnish a bond or other collateral satisfactory to Project Manager to indemnify County against any lien, stop notice, or any other loss or liability. This payment is made pursuant to paragraph 14.11 and Section 01700.

14.9 Approval of Final Payment:

14.9.1 If, on the basis of observation and review of the work during construction, final inspection and review of the final Application for Payment, as required by the Contract Documents, Project Manager is satisfied that the work has been fully and satisfactorily completed and that Contractor has fulfilled all his obligations under the Contract Documents, Project Manager will file a Notice of Completion and, within fifteen days after receipt of the final Application for Payment, approved by Project Manager, indicate in writing its approval for payment.

14.9.2 If, on the basis of observation and review of the work during construction, final inspection and review of the final Application for Payment, as required by the Contract Documents, Project Manager is not satisfied that the work has been fully and satisfactorily completed, and that Contractor has not fulfilled all his obligations under the Contract Documents, Project Manager will, within fifteen days after receipt of the final Application for Payment, indicate in writing his disapproval for payment. Thereupon Project Manager will give written notice to Contractor indicating in writing the reasons for refusing to approve final payment, in which case Contractor shall make the necessary corrections and resubmit the Application.

14.9.3 County shall make payment, including retention, to Contractor, pursuant to an approved final application for Payment, within 15 days of its approval, or on the 30th day following the recording of the Notice of Completion, whichever date is later. The approval and payment procedures described in paragraphs 14.10, 14.11, and 11.4 shall apply to this paragraph.

14.9.4 The Contractor and each assignee under any assignment in effect at the time of final payment shall, if required by the Project Manager, execute and deliver at the time of final payment and as a condition precedent to final payment, a release in form and substance satisfactory to and containing such exemptions as may be found appropriate by the County, discharging the County, Project Manager, and their elected officials, officers, agents, and employees of and from all liabilities, obligations and claims arising under this contract.

14.10 Contractor's Continuing Obligation:

14.10.1 Contractor's obligation to perform the work and complete the project in accordance with the Contract Documents shall be absolute. Neither approval of any progress or final payment by County, nor the issuance of a Notice of Completion, nor any payment by County to Contractor under the Contract Documents, nor any use or occupancy of the project by County shall constitute an acceptance of work not in accordance with the Contract Documents.

14.11 Waiver of Claims:

14.11.1 The making and acceptance of each progress payment and of final payment shall constitute a waiver of all prior claims by Contractor against County which have not been brought to the notice of the County as provided in the Contract Documents.

14.11.2 If any claim or lien or stop-notice or any other demand for payment or security therefore, including claims or demands upon the performance and payment bond sureties, is made or filed with or against County, the project or the premises by any person claiming that Contractor or any subcontractor or other person under it has failed to perform its contractual obligations or to make payment for any labor, services, materials equipment, taxes or other items or obligations furnished or incurred for or in connection with the work, or if at any time there shall be evidence of such non-performance or non-payment or of any claim or lien or stop-notice or other demand for which, if established, County might become liable and which is chargeable to Contractor; or if Contractor or any subcontractor or other person under it causes damage to the work or to any other work on the project; or if the Contractor fails to perform or is otherwise in default under any of the terms or provisions of the Contract Documents, the Project Manager shall have the right to retain from any payment then due or thereafter to become due an amount which in his sole discretion he deems sufficient to:

14.11.2.1 satisfy, discharge and defend against any such claim or lien or stop-notice or other demand, or any action which may be brought or judgment which may be recovered thereon;

14.11.2.2 make good any such non-payment, nonperformance, damage, failure or default; and

14.11.2.3 compensate County for and indemnify it against any and all losses, liability, damages, costs and expenses (including attorneys', accountants', consultants' and experts' fees and costs) which may be sustained or incurred in connection therewith.

14.11.3 County shall have the right to apply and charge against Contractor as much of the amount retained as may be required for the foregoing purposes. If the amount retained is insufficient therefore, Contractor shall be liable for the difference and upon written demand immediately pay the same to the County. The provisions of this paragraph are in addition to such other rights and entitlements as the County may enjoy against Contractor as elsewhere provided in the Contract Documents, and at law and in equity.

14.11.4 Should any subcontractor, material man, supplier or other such person file or maintain any action on or respecting a claim of mechanic's lien, stop-notice, against payment or performance bond, Contractor shall immediately and at his own expense procure, furnish and record appropriate release bonds in accordance with California Civil Code Section 8000 et. seq., and California Code of Civil Procedure Sections 405 through 405.24, inclusive. Upon Contractor's failure immediately to procure, furnish and record such release bonds, County shall have right to procure and record such release bonds, and to retain from Contractor's payment the cost thereof. The provisions of this paragraph are in addition to such other rights and entitlements as enjoyed by the County against Contractor as elsewhere provided in the Contract Documents, and at law and in equity.

14.12 Price Reduction For Defective Cost or Pricing Data

14.12.1 If the Owner determines that any price (including profit) negotiated in connection with the contract, or any cost reimbursable under this contract, was increased by any significant sums because the Contractor, or any subcontractor furnished incomplete or inaccurate cost or pricing data or data not current, then such price or cost or profit shall be reduced accordingly and the contract shall be modified in writing to reflect such reduction. Failure to agree on a reduction shall be subject to the Disputes Resolution clause of this contract.

14.12.2 Since the contract is subject to reduction under this clause by reason of defective cost or pricing data submitted in connection with certain subcontracts, the Contractor may wish to include a clause in each such subcontract requiring the subcontractor to appropriately indemnify the Contractor. It is also expected that any subcontractor subject to such indemnification will generally require substantially similar indemnification for defective cost or pricing data required to be submitted by his lower tier subcontractors.

14.13 Covenant Against Contingent Fees

14.13.1 The Contractor warrants that no person or selling agency has been employed or retained to solicit or secure this contract upon an agreement or understanding for a commission, percentage, brokerage, or contingent fee, excepting bona fide employees or bona fide established commercial or selling agencies maintained by the Contractor for the purpose of securing business. For breach or violation of this warranty the County shall have the right to annul this contract without liability or in its discretion to deduct from the contract price or consideration, or otherwise recover, the full amount of such commission, percentage, brokerage, or contingent fee.

14.14 Gratuities

14.14.1 If the Owner finds, after notice and hearing, that the Contractor or any of the Contractor's agents or representatives offered or gave gratuities (in the form of entertainment, gifts, or otherwise) to any official, employee, or agent of the Owner in an attempt to secure a contract or favorable treatment in the awarding, amending, or making any determinations related to the performance of this contract, the County may, by written notice to the Contractor, terminate the right of the Contractor to proceed under this contract. The County may also pursue other rights and remedies that the law or this contract provides. However, the existence of the facts upon which the County makes such findings shall be in issue and may be reviewed in proceedings under the remedy clause of this contract.

14.14.2 In the event this contract is terminated as provided in this clause, the County shall be entitled (1) to pursue the same remedies against the Contractor as it could pursue in the event of a breach of the contract by the Contractor, and (2) as a penalty in addition to any other damages to which it may be entitled by law, to exemplary damages in an amount (as determined by the County) which shall be not less than 3 nor more than 10 times the costs the Contractor incurs in providing any such gratuities to any such officer or employee.

ARTICLE 15 - SUSPENSION OF WORK AND TERMINATION

15.1 County May Suspend Work

15.1.1 The County may, at any time and without cause, suspend the work or any portion thereof by notice in writing to Contractor. Contractor shall resume the work when so ordered in writing by County.

15.2 County May Terminate

15.2.1 The County may, without prejudice to any other right or remedy and after giving Contractor and his Surety seven calendar days written notice, terminate the services of Contractor and take possession of the project and of all materials, equipment, tools, construction equipment and machinery thereon owned by Contractor, and finish the work by whatever method it may deem expedient, if the Contractor is adjudged as bankrupt or insolvent, or if he makes a general assignment for the benefit of his creditors, or if a trustee or receiver is appointed for Contractor or for any of his property, or if he files a petition to take advantage of any debtor's act, or to reorganize under the bankruptcy or similar laws, or if he fails to supply sufficient skilled workmen or suitable materials or equipment, or if he fails to make prompt payments to subcontractors or for labor, materials or equipment or if he disregards laws, ordinances, rules, regulations or orders of any public body having jurisdiction, or if he disregards the authority of Project Manager, or if he otherwise violates any provisions of the Contract Documents. In such case Contractor shall not be entitled to receive any further payment until the work is finished. If the unpaid balance of the contract price exceeds the direct and indirect costs of completing the project, including compensation for additional professional services, such excess shall be paid to Contractor. If the costs exceed such balance, Contractor shall pay the difference to County.

15.2.2 The termination of the Contractor's services by the County shall not affect any rights of the County against the Contractor then existing or which thereafter accrue. The retention of any payment of money by County due Contractor will not release the Contractor from liability.

15.2.3 The County may, after seven calendar days' written notice to Contractor, without cause and without prejudice to any other right or remedy, elect to abandon the project and terminate the agreement. In such case, Contractor shall be paid for all work then executed, any expense sustained, plus a reasonable profit.

15.2.4 The Contractor may not, under any condition, terminate or stop work because of a dispute, claim or any matter in controversy under the Contract Documents, then under submission, or previously resolved by a final and conclusive decision under paragraph 8.4.

ARTICLE 16 - MISCELLANEOUS

16.1 Giving Notice

16.1.1 Notice shall be deemed to have been validly given if delivered in writing to the individual or member of the firm or to an officer of the corporation for whom it is intended, or if delivered at or sent by registered or certified mail, postage prepaid, to the last business address known to him who gives the notice. Notice shall be effective as of the date of personal service or mailing.

16.2 General

16.2.1 All moneys not paid when due hereunder shall bear interest at the rate of 7% annually.

16.2.2 All specifications, drawings, and copies thereof furnished by the Architect shall be the property of County. They shall not be used on another project, and, with the exception of those sets that have been signed in connection with the execution of the Agreement, shall be returned to the County on request upon completion of the project.

16.2.3 The duties and obligations imposed by these General Conditions and the rights and remedies available hereunder, and, in particular but without limitation, the warranties, guarantees and obligations imposed upon Contractor by the General Conditions and the rights and remedies available to County and Project Manager thereunder, shall be in addition to, and shall not be construed in any other way as a limitation of, any rights and remedies available to them which are otherwise imposed or available by law, by special guarantee or by other provisions of the Contract Documents.

16.2.4 Should County or Contractor suffer injury or damage to his person or property because of any error, omission or act of the other or any of his employees or agents or others for whose acts he is legally liable, notice of said injury shall be made in writing to the County within five days of the first observance of such injury or damage.

16.2.5 The Contract Documents shall be governed by the laws of the State of California. In case any provision of the Contract Documents, including without limitation these General Conditions, shall be invalid, illegal or unenforceable, the validity, legality and enforceability of the remaining provisions shall not in any other way be affected or impaired.

16.2.6 No waiver by County of any provision of the Contract Documents, including without limitations these General Conditions, shall constitute a waiver of any other provision thereof.

16.2.7 The waiver of any instance is not a waiver in the second instance.

ARTICLE 17 - EQUAL OPPORTUNITY

17.1 The Contractor shall maintain policies of employment as follows:

17.1.2 The Contractor and all subcontractors shall not discriminate against any employee or applicant for employment because of race, religion, color, sex, or national origin. The Contractor shall take affirmative action to insure that applicants are employed, and that employees are treated during employment without regard to race, religion, color, sex or national origin. Such action shall include, but not be limited to the following: employment, upgrading, demotion or transfer; recruitment or recruitment advertising; layoff or termination; rates of pay or other forms of compensation; and selection for training, including apprenticeship. The Contractor agrees to post in conspicuous places, available to employees and applicants for employment, notices setting forth the policies of non-discrimination.

17.2 See also Federal, State and County requirements in - SUPPLEMENTARY CONDITIONS.

SECTION 00 73 00

SUPPLEMENTARY CONDITIONS

1. Statements and Payrolls

1.1 The Contractor and each subcontractor shall preserve his payroll records for a period of three years from the date of completion of this contract.

1.2 The Contractor shall submit weekly a copy of all payrolls to the Project Manager. The copy shall be accompanied by a statement signed by the employer or his agent indicating that the payrolls are correct and complete and that the wage rates contained therein are not less than those determined by the Department of Industrial Relations. The Contractor and subcontractor may use standard forms furnished by the Project Manager or any other form approved by the Project Manager. The Contractor shall be responsible for the submission of copies of payrolls of all subcontractors.

1.3 The payrolls and payroll records shall contain the full name, address and social security number of each employee, his correct classification, rate of pay, daily and weekly number of hours worked, itemized deductions made and actual wages paid. They shall also indicate apprentices and ratio of apprentices to journeymen. The employees' address and social security number need only appear on the first payroll on which his name appears.

1.4 If, on or before the 20th of the month, the Contractor has not submitted satisfactory payrolls for all work performed during the monthly period ending on or before the 6th of that month, the Owner will retain an amount equal to 5 percent of the estimated value of the work performed during the month from the next monthly estimate, except that such retention shall not exceed $10,000 nor be less than $1,000. Retention for failure to submit satisfactory payrolls shall be additional to all other retention's provided for in this contract. The retention for failure to submit payrolls for any monthly period will be released for payment on the monthly estimate for partial payments next following the date that all the satisfactory payrolls for which the retention was made are submitted.

2. Accident Prevention

2.1 Precautions shall be exercised at all times for protection of persons (including employees) and property. These shall include, but not be limited to, installation of adequate safety guards and protective devices for all equipment and machinery, whether used in the performance of work or permanently installed as part of the work. Contractor shall comply with all applicable laws relating to safety precautions, including safety regulations of CAL-OSHA.

2.2 Where conditions of the work present unreasonable risk or death to persons, or property damage, in the judgment of the Owner, it may direct Contractor at his sole expense, to close down the work and not commence work again until the hazardous condition is eliminated.

2.3 Nothing herein shall be deemed to allow use of shoring, sloping or protective system less effective than that required by the Construction Safety Orders of CAL-OSHA.

3. Air Pollution - State Requirements

3.1 In connection with Public Contracts Code Section 10231, Contractor and his subcontractors shall comply with all air pollution control rules, regulations, ordinances, and statutes which apply to any work performed pursuant to the contract, including any air pollution control rules, regulations, ordinances, and statutes specified in Government Code Section 11017. Fugitive Dust Permit and construction emission dust/control plan will be required by the Tehama County Air Pollution Control District (TCAPCD). They advised that open burning without a permit is restricted.

4. Anti-Trust Claims

4.1 By execution of this contract, Contractor agrees to and does hereby assign to awarding body all right, title, and interest in and to all causes of action it may have under the Clayton Act (15 U.S.C. Sec. 15) Section 4 or under the Cartwright Act (Business and Professions Code) Section 16700 et. seq., arising from purchases of goods, services, or materials made in performance of this contract. The parties shall deem this assignment effective at the time of the tender of final payment to Contractor without further acknowledgment. Contractor shall include, or cause to be included, similar provision in any subcontract entered into for any part of the work of this contract.

5. Anti-Kick Back

5.1 The Contractor must comply with the provisions in the Copeland "Anti-Kick Back Act" (18 USC 874) as supplemented in Department of Labor Regulations (29 CFR, Part 3). This Act provides that each contractor shall be prohibited from inducing, by any means, any person employed in the construction, completion or repair of public work, to give up any part of the compensation to which he is otherwise entitled.

6. Equal Opportunity - Federal Requirements

6.1 Selection of Labor: During the performance of this contract, the Contractor shall not discriminate against labor from any other State, possession or territory of the United States.

6.2 Employment Practices: During the performance of this contract, Contractor agrees as follows:

a. The Contractor will not discriminate against any employee or applicant for employment because of race, color, religion, sex, or national origin. The contract will take affirmative action to ensure that applicants are employed, and that employees are treated during employment without regard to their race, color, religion, sex or national origin. Such action shall include, but not be limited to the following: employment, upgrading, demotion or transfer; recruitment or recruitment advertising; layoffs or termination; rates of pay or other forms of compensation; and selection for training, including apprenticeship. The Contractor agrees to post in conspicuous places, available to employees and applicants for employment, notices to be provided by the Owner setting forth the provisions of this nondiscrimination clause.

b. The Contractor will, in all solicitation or advertisements for employees placed by or on behalf of the Contractor, state that all qualified applicants will receive considerations for employment without regard to race, color, religion, sex or national origin.

c. The Contractor will send to each labor union or representative of workers with which he has a collective bargaining agreement or other contract or understanding, a notice to be

provided by the Owner advising the said labor union or workers' representative of the Contractor's commitments under this section and shall post copies of the notice in conspicuous places available to employees and applicants for employment.

d. The Contractor will comply with all provisions of Executive Order 11246 of September 24, 1965, and of the rules, regulations (41 CRF, Part 60) and relevant orders of the Secretary of Labor.

e. The Contractor will furnish all information and reports required by Executive Order 11246 of September 24, 1965, and by rules, regulations and order of the Secretary of Labor, or pursuant thereto, and will permit access to his books, records, and accounts by the Secretary of Labor for purposes of investigation to ascertain compliance with such rules, regulations and orders.

f. In the event of the Contractor's noncompliance with the nondiscrimination clauses of this contract or with any of the said rules, regulations or orders, this contract may be canceled, terminated or suspended in whole or in part and the Contractor may be declared ineligible for further Government contracts of Federally-assisted construction contracts in accordance with procedures authorized in Executive Order 11246 of September 24, 1965, and such other sanctions may be imposed and remedies invoked as provided in Executive Order 11246 of September 24, 1965, or by rule, regulation or order of the Secretary of Labor, or as otherwise provided by law.

g. The Contractor will include the provisions of this Section in every subcontract or purchase order unless exempted by rules, regulations or orders of the Secretary of Labor issued pursuant to Section 204 of Executive Order 11246 of September 24, 1965, so that such provisions will be binding upon each subcontractor or vendor.

No otherwise qualified handicapped individual in the United States as defined in Section 7 (5) of the Rehabilitation Act of 1973 (P.L. 93-112) shall, solely by reason of his handicap, be excluded from the participation in, be denied the benefits of, or be subjected to discrimination under this contract.

6.3 Air Pollution - Federal Requirements: The Contractor agrees to comply with all applicable standards, orders, or regulations issued pursuant to the Clean Air Act of 1970.

6.4 Assurance of Minority Business Enterprise Participation

6.4.1 The bidder's execution of the signature portion of this proposal shall also constitute execution of this assurance.

6.4.2 The bidder hereby gives assurance pursuant to the requirements of the code of federal regulations, that bidder has made a reasonable effort to employ Minority Business Enterprises. Bidder further gives assurance that bidder will submit the documentation listing Minority Business Enterprises with which the bidder will subcontract if the contract is awarded to bidder and if bidder is unable to obtain MBE participation, of the steps bidder has taken to obtain MBE participation.

7. Fair Employment Practices - State Requirements

7.1 In connection with the performance of work under this contract, Contractor agrees as follows:

a. Contractor will not willfully discriminate against any employee or applicant for employment because of race, color, religious creed, physical handicap, medical condition, marital status, ancestry, sex or national origin. Contractor will take affirmative action to ensure that applicants are employed, and that employees are treated during employment, without regard to their race, color, religion, ancestry, sex or national origin. Such action shall include, but not be limited to, the following: employment, upgrading, demotion, or transfer; recruitment or recruitment advertising; layoff or termination; rates of pay or other forms of compensation; and selection for training, including apprenticeship. Contractor agrees to post in conspicuous places, available to employees and applicants for employment, notices to be provided by the awarding authority setting forth the provision of this Fair Employment Practices section.

b. Contractor will send to each labor union or representative of workers with which he has collective bargaining agreement or other contract or understanding, a notice, to be provided by awarding authority, advising said labor union or workers' representative of Contractor's commitments under this section, and shall post copies of the notice in conspicuous places available to employees and applicants for employment.

c. Contractor will permit access to his records of employment, employment advertisements, application forms and other pertinent data and records by the Fair Employment and Housing Commission, awarding authority or any other appropriate agency of the State of California designated by awarding authority for purposes of investigation to ascertain compliance with Fair Employment Practices section of this contract.

d. A finding of willful violation of the Fair Employment Practices section of this contract or of the Fair Employment and Housing Act shall be regarded by awarding authority as a basis for determining Contractor to be not a "responsible bidder" as to future contracts for which such Contractor may submit bids, for revoking the Contractor's prequalification rating, if any, and for refusing to establish, re-establish or re prequalification rating for the Contractor.

Contractor shall immediately notify Awarding Authority if it the Fair Employment and Housing Commission has determined that a complaint alleging that Contractor has violated the Fair Employment and Housing Act is valid. Contractor shall immediately provide to Awarding Authority any agreement Contractor entered into under Government Code section 12964 and immediately notify Awarding Authority of any civil action brought against Contractor pursuant to Government Code section 12964.

Awarding authority shall deem a finding of willful violation of the Fair Employment and Housing Act to have occurred upon receipt of notice any such notice from Contractor, the Fair Employment and Housing Commission, and or Superior or Federal Court.

Upon receipt of such written notice, Awarding authority shall notify Contractor that unless he demonstrates to the satisfaction of Awarding authority within a stated period that the violation has been corrected, his prequalification rating will be revoked at the expiration of such period.

e. Contractor agrees, that should the awarding authority determine the Contractor has not complied with the Fair Employment Practices section of this contract, then pursuant to Labor Code Sections 1735 and 1775, Contractor shall, as a penalty to the awarding authority, forfeit, for each calendar day, or portion thereof, for each person who was denied employment as a result of such non-compliance, the penalties provided in the Labor Code for violation of prevailing wage rates. Such moneys may be recovered from Contractor. Awarding authority may deduct any such damages from any moneys due Contractor from the State of California.

f. Nothing contained in this Fair Employment Practices Section shall be construed in any manner or fashion so as to prevent awarding authority of the State of California from pursuing other remedies that may be available at law.

Nothing contained in this Fair Employment Practices section shall be construed in any manner or fashion so as to require or permit hiring of an employee not permitted by the National Labor Relations Act.

g. Prior to award of the contract, Contractor shall certify to awarding authority that he has or will meet the following standards for affirmative compliance, which shall be evaluated in each case by awarding authority:

(1) Contractor shall provide evidence, as required by the awarding authority, that he has notified all supervisors, foremen, and other personnel officers in writing of the content of the anti-discrimination clause and their responsibilities under it.

(2) Contractor shall provide evidence, as required by awarding authority, that he has notified all sources of employee referrals (including unions, employment agencies, advertisements, Department of Employment Development) of the content of the anti-discrimination clause.

(3) Personally, or through his representative, Contractor shall, through negotiations with unions with whom he has agreements, attempt to develop an agreement, which will:

(a) Spell out responsibilities for non-discrimination in hiring, referral, upgrading and training.

(b) Otherwise implement an affirmative anti-discrimination program in terms of the unions' specific areas of skill and geography, to the end that qualified minority workers will be available and given equal opportunity for employment.

(4) Contractor shall notify contracting agency of opposition to the anti-discrimination clause by individuals, firms or organizations during the period of its prequalification.

h. Contractor shall include the provisions of the foregoing paragraphs (a) through (g) in every first tier subcontract, so that such provisions will be binding upon each such subcontractor.

8. <u>Additional Division of Labor Standards Enforcement Requirements</u>

8.1 On each job site that is subject to compliance monitoring and enforcement by the Department of Industrial Relations, the prime contractor is required to post job site notices prescribed by regulation (See 8 Calif. Code Reg. §16451(d).

8.2 All contractors and subcontractors must furnish electronic certified payroll records directly to the Labor Commissioner (AKA Division of Labor Standards Enforcement) in compliance with California Labor Code Section 1776, with exceptions as specified in Labor Code section 1771.4(a)(4). .

SECTION 01 11 00

SUMMARY OF WORK

PART 1 GENERAL

1.1 SUMMARY

A. Project consists of construction of the Corning Veteran's Hall Remodel project as indicated in Contract Documents.

1.2 REQUIREMENTS INCLUDED

A. This section includes administrative provisions:
1. Work sequence.
2. Work by County.
3. Contractor use of premises.
4. Field engineering.
5. Regulatory requirements and reference standards.
6. County furnished, Contractor installed products.

1.3 WORK SEQUENCE

A. Coordinate construction schedule and operations with County.

1.4 WORK BY COUNTY

A. A. Furniture and Equipment.

1.5 CONTRACTOR USE OF PREMISES

A. Limit use of premises for Work and construction operations and to allow for work by other contractors.

B. Coordinate use of premises and access to site under direction of County.

1.6 FIELD ENGINEERING

A. Provide field engineering services; establish lines and levels by use of recognized engineering survey practices.

B. Locate and protect control and reference points.

1.7 REGULATORY REQUIREMENTS AND REFERENCE STANDARDS

A. Regulatory Requirements:
1. Architect has contacted governing authorities and reviewed design requirements of local, state and federal agencies for applicability to Project.
2. Contractor shall be responsible for contacting governing authorities directly for necessary information and decisions bearing upon performance of Work.
3. Reference Standards:
4. For Products specified by association or trade standards, comply with requirements of

referenced standard, except when more rigid requirements are specified or are required by applicable codes.

5. Applicable date of each standard is that in effect as of date on proposal or date on Contract where no proposal is available, except when a specific date is specified.

1.8 COUNTY FURNISHED, CONTRACTOR INSTALLED PRODUCTS

A. Select products are to be furnished and paid for by County and installed by Contractor:
   1. Refer to Drawings.

B. County's Responsibilities:
   1. Arrange for and deliver shop drawings, product data, and samples to Contractor.
   2. Arrange and pay for product delivery to site.
   3. Inspect products jointly with Contractor on delivery.
   4. Submit claims for transportation damage.
   5. Arrange for replacement of damaged, defective, or missing items.
   6. Arrange for manufacturer's warranties, inspections, and service.

C. Contractor's Responsibilities:
   1. Review shop drawings, product data, and samples.
   2. Receive and unload products at site.
   3. Inspect jointly with County for completeness and damage.
   4. Handle, store, and install products.
   5. Finish products as required after installation.
   6. Repair or replace items damaged by Work of this Contract.

PART 2 PRODUCTS

Not Used

PART 3 EXECUTION

Not Used

END OF SECTION

SECTION 01 23 00

ALTERNATES

PART 1 GENERAL

SUMMARY

A. This Section includes administrative and procedural requirements for alternates.

DEFINITIONS

B. Alternate: An amount proposed by bidders and stated on the Bid Form for certain work defined in the Bidding Requirements that may be added to or deducted from the Base Bid amount if County decides to accept a corresponding change either in the amount of construction to be completed or in the products, materials, equipment, systems, or installation methods described in the Contract Documents.
   1. The cost or credit for each alternate is the net addition to or deduction from the Contract Sum to incorporate alternate into the Work. No other adjustments are made to the Contract Sum.

PROCEDURES

C. Coordination: Modify or adjust affected adjacent work as necessary to completely integrate work of the alternate into Project.
   1. Include as part of each alternate, miscellaneous devices, accessory objects, and similar items incidental to or required for a complete installation whether or not indicated as part of alternate.

D. Notification: Immediately following award of the Contract, notify each party involved, in writing, of the status of each alternate. Indicate if alternates have been accepted, rejected, or deferred for later consideration. Include a complete description of negotiated modifications to alternates.

E. Execute accepted alternates under the same conditions as other work of the Contract.

F. Schedule: A Schedule of Alternates is included at the end of this Section. Specification Sections referenced in schedule contain requirements for materials necessary to achieve the work described under each alternate.

G. Acceptance of alternate bids will not change the number of days allowed for work under this contract.

PART 2 PRODUCTS

Not Used

PART 3 EXECUTION

Not Used

END OF SECTION

SECTION 01 26 00

CONTRACT MODIFICATION PROCEDURES

PART 1 GENERAL

1.1 SUMMARY

A. Documentation of Change in Contract Sum/Price and Contract Time.

B. Change Procedures.

C. Stipulated Price Change Order.

D. Unit Price Change Order.

E. Time and Material Change Order.

F. Execution of Change Orders.

G. Change Order Breakdown / Markup

1.2 DOCUMENTATION OF CHANGE IN CONTRACT SUM/PRICE AND CONTRACT TIME

A. Maintain detailed records of work done on a time and material basis. Provide full information required for evaluation of proposed changes, and to substantiate costs of changes in the Work.

B. Document each quotation for a change in cost or time with sufficient data to allow evaluation of the quotation. At a minimum, documentation shall include:
1. Origin and date of claim.
2. Dates and times work was performed, and by whom.
3. Time records and wage rates paid
4. Quantities of products, labor, and equipment.
5. Taxes, insurance and bonds.
6. Overhead and profit (See Paragraph 1.9 Below)
7. Justification for any change in Contract Time with sufficient detail to demonstrate how the change affected the critical path.
8. Credit for deletions from Contract, similarly documented.
9. Invoices and receipts for products, equipment, and subcontracts, similarly documented.

1.3 CHANGE PROCEDURES

A. The Architect will advise of minor changes in the Work not involving an adjustment to Contract Sum/Price or Contract Time by issuing supplemental instructions on AIA Form G710.

B. The Architect may issue a Change Order Request which includes a detailed description of a proposed change with supplementary or revised Drawings and specifications, a change in Contract Time for executing the change with a stipulation of any overtime work required and the period of time during which the requested price will be considered valid. Contractor will prepare and submit an estimate.

C. The Contractor may propose a change by submitting a request for change to the Architect, describing the proposed change and its full effect on the Work, with a statement describing the reason for the change, and the effect on the Contract Sum/Price and Contract Time with full documentation and a statement describing the effect on Work by separate or other contractors. Document any requested substitutions.

1.4 STIPULATED SUM PRICE CHANGE ORDER

A. Based on Change Order Request and Contractor's fixed price quotation or Contractor's request for a Change Order as approved by County.

1.5 UNIT PRICE CHANGE ORDER

A. For predetermined unit prices and quantities; the Change Order will be executed on a fixed unit price basis.

B. For unit costs or quantities of units of work that are not predetermined, execute Work under a Construction Change Authorization.

C. Changes in Contract Sum/Price or Contract Time will be computed as specified for Time and Material Change Order.

1.6 TIME AND MATERIAL CHANGE ORDER

A. Submit itemized account and supporting data after completion of change, within time limits indicated in the Conditions of the Contract.

B. Architect will determine the change allowable in Contract Sum/Price and Contract Time as provided in the Contract Documents.

C. Maintain detailed records of work done on Time and Material basis.

D. Provide full information required for evaluation of proposed changes, and to substantiate costs for changes in the Work.

1.7 EXECUTION OF CHANGE ORDERS

A. Execution of Change Orders: Architect will issue Change Orders for signatures of parties as provided in the Conditions of the Contract.

1.8 CHANGE ORDER BREAKDOWN/MARKUPS

A. The Contractor's written response to all change order requests (CORs) shall be formatted with an itemized breakdown of all increases or decreases in the ***cost*** of the Contractor's and all Subcontractor's work. *Cost means an itemized breakdown of all labor (by crafts), materials, sales taxes, equipment rentals, etc. for each portion of the work which comprises the change order including any Subcontractors itemized breakdowns, plus mark-up not exceeding that described in paragraph B below, which represent all profits, overhead, and administration costs.* Contractor shall provide at least the following detail:
   1. Material quantities and unit cost.
   2. Labor costs (identified with specific item of material to be placed or operation to be performed).
   3. Construction equipment.
   4. Overhead.
   5. Profit.

6. Taxes.

B. The mark-up on work will be limited to the following and shall represent all profits, overhead and administration costs. No additional mark-ups will be allowed. On proposals covering both increases and decreases in the amount of the contract the mark-up will be computed on the net change only. On proposals for decreases in the amount of the contract the mark-up will be part of the decrease in direct cost.

1. Change Orders of $0 - $5,000:

   a. Fifteen percent (15%) of the cost of that portion of the change order to be performed by the General Contractor with its own forces.
   b. Fifteen percent (15%) of the cost of that portion of the change order to be performed by a subcontractor with its own forces, plus five percent (5%) for the General Contractor. Total combined General Contractor and Subcontractor mark-up shall not exceed twenty percent (20%).
   c. Fifteen percent (15%) of the cost of that portion of the change order to be performed by a lower tier Subcontractor with its own forces, plus five percent (5%) for the Subcontractor, plus five percent (5%) for the General Contractor. Total combined General Contractor, Subcontractor, and lower tier Subcontractor mark up shall not exceed twenty-five percent (25%).
   d. All mark-ups to be calculated on actual construction costs, not marked up figures.

2. Change Orders of $5,001- $30,000:

   a. Thirteen percent (13%) of the cost of that portion of the change order to be performed by the General Contractor with its own forces.
   b. Twelve percent (12%) of the cost of that portion of the change order to be performed by a subcontractor with its own forces, plus four percent (4%) for the General Contractor. Total combined General Contractor and Subcontractor mark-up shall not exceed seventeen percent (16%).
   c. Twelve percent (12%) of the cost of that portion of the change order to be performed by a lower tier Subcontractor with its own forces, plus four percent (4%) for the Subcontractor, plus four percent (4%) for the General Contractor. Total combined General Contractor, Subcontractor, and lower tier Subcontractor mark-up shall not exceed twenty percent (20%).
   d. All mark-ups to be calculated on actual construction costs, not marked up figures.

3. Change Orders of $30,001 or more:

   a. Ten percent (10%) of the cost of that portion of the change order to be performed by the General Contractor with its own forces.
   b. Ten percent (10%) of the cost of that portion of the change order to be performed by a subcontractor with its own forces, plus three percent (3%) for the General Contractor. Total combined General Contractor and Subcontractor mark-up shall not exceed seventeen percent (13%).
   c. Ten percent (10%) of the cost of that portion of the change order to be performed by a lower tier Subcontractor with its own forces, plus three percent (3%) for the Subcontractor, plus three percent (3%) for the General Contractor. Total combined General Contractor, Subcontractor, and lower tier Subcontractor mark-up shall not exceed sixteen percent (16%).
   d. All mark-ups to be calculated on actual construction costs, not marked up figures.

C. Costs of change order work shall not include costs of any of the following:
   1. Superintendent(s) – unless performing physical work associated with the change order

2. Assistant Superintendent(s) – unless performing physical work associated with the change order
3. Project Engineer
4. Project Manager
5. Scheduler
6. Estimator
7. Drafter or Detailer
8. As-built Plans
9. Small Tools (replacement value that does not exceed $800)
10. Office expenses including staff, materials, and supplies
11. Workman's Compensation and Public Liability Insurance
12. On-site or off-site trailer and storage rental and expenses
13. Site fencing
14. Utilities, including gas, electric, sewer, water, telephone, fax or copier equipment
15. Data processing personnel and equipment
16. Home office overhead
17. Vehicles generally used by contractor staff unless it can be demonstrated that the vehicle was uses specifically to perform work necessitated by the change order.

PART 2 PRODUCTS
Not Used

PART 3 EXECUTION
Not Used

END OF SECTION

SECTION 01 26 13

REQUESTS FOR INTERPRETATION

PART 1 GENERAL

1.1 DESCRIPTION

A. This section covers general requirements for Contractor's Requests for Interpretation (RFIs).

1.2 CONTRACTORS REQUESTS FOR INTERPRETATION

A. Submit a Request for Interpretation to the Architect when:
   1. An unforeseen condition or constructability question occurs.
   2. Questions regarding information in the Contract Documents arise.
   3. Information not found in the Contract Documents is required.

B. When possible, request such clarification in writing at the next scheduled Project meeting. When the RFI is answered at the Project meeting, number the RFI and enter the response into the meeting minutes.
   1. When the urgency of the need, or the complexity of the item makes clarification at the next scheduled Project meeting impractical, prepare and submit a formal written RFI to the Architect without delay.

C. Submit RFIs within a reasonable time frame so as not to interfere with or impede the progress of the work. Keep the number of RFIs to a minimum.
   1. When an answer to an RFI has an effect on cost or time, notify the Architect and County in accordance with the Contract Documents at the time of submittal. Notification shall occur prior to commencing such work, so that the change order process can be initiated.
   2. At the time of submitting an RFI, alert the Architect to the time available before the response will cause an impact to the Project.

D. Submit the RFI through Alliance2Build ® Project Collaboration System:
   1. Submit an electronic Request for Interpretation by logging into Alliance system and selecting the link "Submit RFI" on the Project Home Page. The next consecutive number will be assigned automatically. Fill in the text boxes with the following information:
      a. Reference such as Drawing numbers, Detail references or specification numbers, as appropriate.
      b. Subject of RFI in a concise form describing the nature of the problem
      c. Importance factor with four available options: Urgent, High, Medium and Low
      d. Clear, concise explanation of information or clarification requested.
      e. Contractor's Suggested Resolution for the described request, if appropriate.
      f. Attach files, drawing references, sketches, images, any types of electronic information that pertain to the request.

E. Allow a minimum of 5 working days for review and response time; the response time will be increased if inadequate information is provided, when the RFI is submitted out-of-sequence, or if in the opinion of the Architect, more time is needed to answer the RFI.

1.3 QUALITY ASSURANCE

A. Carefully study the Contract Documents to assure that the requested information is not

available therein. RFIs requesting information available in the Contract Documents may not be answered by the Architect.

B. In all cases where an RFI is issued to request clarification of coordination issues, for example, pipe and duct routing, clearances, specific locations of work shown diagrammatically, and similar items, the Contractor shall fully lay-out a suggested solution using drawings or sketches drawing to scale and submit same with the RFI. An RFI which fails to include a suggested solution will not be answered.

C. Do not use RFI for the following purposes:
   1. To request approval of submittals.
   2. To request approval of substitutions.
   3. To request changes to the Contract Documents to confirm action taken by the Contractor for requested changes/substitutions to the Contract Documents.

D. If the Contractor believes that a clarification by the Architect may result in a change in Contract price, the contractor shall not proceed with the work indicated by the RFI until a change order or other acceptable tracking device is prepared and approved by the County.
   1. If the Contractor believes that a clarification by the Architect results in additional cost, the Contractor shall identify in the RFI the basis of the Contractor's bid as it relates to the RFI.
   2. Answered RFIs shall not be construed as an approval to perform extra work.

PART 2 PRODUCTS
Not Used

PART 3 EXECUTION
Not Used

END OF SECTION

SECTION 01 29 00

PAYMENT PROCEDURES

PART 1 GENERAL

1.1 SUMMARY

A. Procedures for preparation and submittal of Applications for Payment.

1.2 SCHEDULE OF VALUES

A. General: Coordinate Contractor's Schedule of Values and Project Schedule.

B. Form and Content:
1. Type or print the Schedule of Values on the form stipulated in the Contract. Upon request, Contractor's own standard form with automated printout will be considered by the County for acceptance.
2. List the installed cost of the component parts of the Work broken down into sufficient detail to serve as a basis for computing values for progress payments. Further break down mechanical, electrical, plumbing and fire sprinkler systems by floor and by rough finish Work.
3. For each major line-item sub-costs of major products and operations.
4. For the various portions of the Work:
   a. Include a separate line item for the amount of overhead and profit drawn on an even monthly basis spread over the entire project duration.
   b. Include mobilization as a separate item.
5. The sum of all costs listed in the schedule, plus the overhead and profit shall equal the total Contract Sum.
6. Revise and resubmit Schedule of Values as follows:
   a. With each properly executed Change Order.
   b. As required by the County.

C. Sub-schedule of Unit Material Costs:
1. Submit for products on which progress payments will be requested for stored products.
2. The form of submittal shall parallel that of the Schedule of Values, with each item identified the same as the line item in the Schedule of Values.
3. The unit quantity for bulk materials shall include an allowance for normal waste.
4. The unit costs for materials shall exclude overhead and profit and shall be divided into:
   a. Cost of the material, delivered and unloaded at the Site, with applicable taxes paid.
   b. Installation costs.
5. Installed unit for cost multiplied by the quantity listed shall equal the cost of that item in the Schedule of Values.

D. Distribute one (1) copy to the County.

E. Submit Schedule of Values to the County for review and approval a minimum of thirty (30) days prior to the Contractor's first Application for Payment in compliance with requirements of the Contract.

1.3 FORMAT

A. AIA G702 Application and Certificate for Payment: Application for Payment including continuation sheets when required.

B. For each item, provide a column for listing: Item Number; Description of work; Scheduled Value, Previous Applications: Work in Place and Stored Materials under this Application: Authorized Change Orders; Total Completed and Stored to Date of Application; Percentage of Completion; Balance to Finish; and Retainage.

C. Prior to submitting the first application for payment submit a schedule of values, per paragraph 1.2 of this section.

D. Provide spaces for signatures of the following:
1. Contractor
2. Architect
3. Project Inspector
4. County

1.4 PREPARATION OF APPLICATIONS

A. Present required information in typewritten form.

B. Execute certification by signature of authorized officer.

C. Use data from approved Schedule of Values. Provide dollar value in each column for each line item for portion of work performed and for stored products.

D. List each authorized Change Order as an extension on continuation sheet, listing Change Order number and dollar amount as for an original item of Work.

E. Certificates for payment as recommended by the Architect or the County shall include a 10% retention that will be held by the County until such a time as outlined in Section 01 77 00.

F. Prepare Application for Final Payment as specified in Section 01 77 00.

1.5 PAYMENT APPLICATION SUBMITTAL PROCEDURES

A. Review Pay Application with Project Inspector prior to submitting to Architect.

B. Submit three copies of each Application for Payment or submit through Alliance2Build.

C. Submit an updated construction schedule with each Application for Payment.

D. Payment Period: Monthly.

1.6 SUBSTANTIATING DATA

A. When Architect/Engineer requires substantiating information, submit data justifying dollar amounts in question.

B. Provide one copy of data with cover letter for each copy of submittal. Show Application number and date, and line item by number and description.

PART 2 PRODUCTS
Not Used

PART 3 EXECUTION
Not Used

END OF SECTION

SECTION 01 31 00

PROJECT MANAGEMENT COORDINATION

PART 1 GENERAL

1.1 SECTION INCLUDES

A. Coordination.

B. Cutting and patching.

C. Preconstruction conference.

D. Site mobilization conference.

E. Progress meetings.

F. Preinstallation conferences.

1.2 COORDINATION

A. Coordinate scheduling, submittals, and Work of the various Sections of specifications to assure efficient and orderly sequence of installation of interdependent construction elements, with provisions for accommodating items installed later.

B. Verify that utility requirements and characteristics of operating equipment are compatible with building utilities. Coordinate work of various Sections having interdependent responsibilities for installing, connecting to, and placing in service, such equipment.

C. Coordinate space requirements and installation of mechanical and electrical work which are indicated diagrammatically on Drawings. Follow routing shown for pipes, ducts, and conduit, as closely as practicable; place runs parallel with line of building. Utilize spaces efficiently to maximize accessibility for other installations, for maintenance, and for repairs.
   1. Priority of right of way in attic and other interstitial spaces shall be as follows:
      a. First Priority: Electrical lights, electrical panels and sloped drain piping.
      b. Second Priority: Ductwork.
      c. Third Priority: Fire protection piping, domestic hot water, domestic cold water and condenser water piping.
      d. Other.
   2. Coordinated shop drawing reflecting the multiple trade coordination shall be prepared with any minor modifications documented and submitted as a record document. Provide electronic files to the Architect of all system coordination drawing record document files with the record documents.
   3. The Contractor is responsible for translating the data coming to and from the format provided by the Architect without loss of data integrity. Architect will only receive data in the AutoCAD format in which the background(s) are provided.

D. In finished areas except as otherwise indicated, conceal pipes, ducts, and wiring within the construction. Coordinate locations of fixtures and outlets with finish elements.

E. Coordinate completion and clean-up of Work of separate Sections in preparation for

Substantial Completion.

F. After County occupancy of premises, coordinate access to site for correction of defective Work and Work not in accordance with Contract Documents, to minimize disruption of County's activities.

1.3 CUTTING AND PATCHING

A. Employ skilled and experienced installer to perform cutting and patching.

B. Submit written request in advance of cutting or altering elements which affects:
1. Structural integrity of element.
2. Integrity of weather-exposed or moisture-resistant elements.
3. Efficiency, maintenance, or safety of element.
4. Visual qualities of sight-exposed elements.
5. Work of County or separate contractor.

C. Execute cutting, fitting, and patching including excavation and fill, to complete Work, and to:
1. Fit the several parts together, to integrate with other Work.
2. Uncover Work to install or correct ill-timed Work.
3. Remove and replace defective and non-conforming Work.
4. Remove samples of installed Work for testing.
5. Provide openings in elements of Work for penetrations of mechanical and electrical Work.

D. Execute work by methods which will avoid damage to other Work, and provide proper surfaces to receive patching and finishing.

E. Cut rigid materials using masonry saw or core drill.

F. Restore Work with new products in accordance with requirements of Contract Documents.

G. Fit Work tight to pipes, sleeves, ducts, conduit, and other penetrations through surfaces.

H. Maintain integrity of wall, ceiling, or floor construction; completely seal voids.

I. Refinish surfaces to match adjacent finishes. For continuous surfaces, refinish to nearest intersection; for an assembly, refinish entire unit.

J. Identify any hazardous substance or condition exposed during the Work to the Architect/Engineer for decision or remedy.

1.4 PRECONSTRUCTION CONFERENCE

A. County will schedule a conference after Notice of Award.

B. Attendance Required: County, Architect, and Contractor’s Superintendent.

C. Agenda:
1. Execution of County-Contractor Agreement.
2. Submission of executed bonds and insurance certificates.
3. Distribution of Contract Documents.
4. Submission of Schedule of Values.
5. Designation of personnel representing the parties in Contract, and the Architect/Engineer.

6. Procedures and processing of submittals, substitutions, applications for payments, proposal request, Requests for Interpretation, Change Orders, record documents and Contract closeout procedures.
7. Submission of Construction Schedule.
8. Scheduling activities of inspector and geotechnical Engineer.
9. Use of premises by County and Contractor.
10. County's requirements and any partial occupancy requirements.
11. Construction facilities and controls provided by County.
12. Temporary utilities provided by County.
13. Survey and building layout.
14. Security and housekeeping procedures.
15. Procedures for testing.

1.5 PROGRESS MEETINGS

A. Coordinate with County to schedule and administer meetings throughout progress of the Work at two week intervals.

B. Contractor will prepare agenda with copies for participants, preside at meetings, record minutes, and distribute copies within seven days to Architect, County, participants, and those affected by decisions made.

C. Attendance Required: Job superintendent, major Subcontractors and suppliers, County, Architect, as appropriate to agenda topics for each meeting.

D. Agenda:
1. Review minutes of previous meetings.
2. Review of Work progress.
3. Field observations, problems, and decisions.
4. Identification of problems which impede planned progress.
5. Review of submittals schedule and status of submittals.
6. Review of off-site fabrication and delivery schedules.
7. Maintenance of progress schedule.
8. Corrective measures to regain projected schedules.
9. Planned progress during succeeding work period.
10. Coordination of projected progress.
11. Maintenance of quality and work standards.
12. Effect of proposed changes on progress schedule and coordination.
13. Other business relating to Work.
14. Inspection and acceptance of any equipment put into service during construction period.

1.6 PREINSTALLATION CONFERENCES

A. When required in individual specification Section, convene a preinstallation conference at site prior to commencing work of the Section.

B. Require attendance of parties directly affecting, or affected by, work of the specific Section.

C. Notify Architect seven days in advance of meeting date.

D. Prepare agenda, preside at conference, record minutes, and distribute copies within seven days after conference to participants, with seven copies to Architect/Engineer.

E. Review conditions of installation, preparation and installation procedures, and coordination with related work.

PART 2 PRODUCTS
Not Used

PART 3 EXECUTION
Not Used

END OF SECTION

SECTION 01 31 10
CONSTRUCTION SCHEDULE

PART 1 GENERAL

1.1 SCOPE

A. The work under this section consists of the planning, scheduling and reporting procedures required in conjunction with the progress of the work. It is the intent that the Contractor shall develop a schedule-demonstrating fulfillment of all contract requirements. The levels of detail and submittal procedures are described hereinafter.

B. The schedule shall be updated a minimum of once a month at a joint meeting with the Project Manager, General Contractor and required subcontractors.

C. Development and maintenance of the construction schedule and supplementary information as detailed hereinafter is the responsibility of the Contractor.

D. The Contractor shall use the accepted schedule at all times in planning, coordinating and performing the work under this contract including all activities of the subcontractors, vendors and suppliers.

1.2 THE COMPLETE PROJECT SCHEDULE

A. Within 10 working days after receipt of Notice to Proceed, the Contractor shall submit the schedule in accordance with all requirements of this section. The schedule shall reflect the Contractor's approach to scheduling the COMPLETE project, including all submittals; procurement and all required testing and operational requirements called for elsewhere in the documents.

B. Within 5 working days after receipt of the schedule, the County will meet with the Contractor for joint review, correction or adjustment of the proposed schedule. Within five (5) working days after the joint review, the Contractor shall if necessary revise and shall resubmit the COMPLETE Schedule to the County. The resubmission will be reviewed by the County, and, if found to be as previously agreed upon, will be accepted.

C. The accepted schedule shall constitute the project work schedule until subsequently revised in accordance with requirements of this section.

1.3 SCHEDULE REQUIREMENTS

A. The schedule shall show the sequence and interdependence of activities required for complete performance of all items of work under the contract or portion thereof

B. The Contractor shall submit the following supporting data with the submittal of his original CPM construction schedule:

1. The proposed number of working days per week.

2. The holidays to be observed during the duration of the contract (by day, month and year).

3. The planned number of shifts per day.

4. The number of hours per shift.

5. The planned usage of major construction equipment on the site, on a monthly basis.

6. The average weekly manpower usage for each trade to be employed on the project. Any changes to the above information shall be submitted with successive updates and revisions.

C. To the extent that the schedule or any revised schedule shows anything not jointly agreed upon, it shall be deemed to have not been accepted by the Project Manager. Failure to include any element of work required for the performance of this contract shall not excuse the Contractor from completing all work required within any applicable completion date of each phase notwithstanding the Project Manager's acceptance of the schedule.

1.4 ACTIVITY COST DATA

A. The contractor shall furnish the County with a cost allocation (schedule of values) totaling to the contract amount, for all items detailed in the schedule. The County will prepare a Payment Request form this allocation. Once accepted by the County, the Payment Request form will become the basis for determining the progress payments for the balance of the project and the Contractor must submit his monthly Payment Request based upon progress reported on this form. No payment will be made unless supported by this Payment Request form completed to show monthly progress.

B. The cost distribution may include cost for delivered equipment and material and the County will pay for only such items as identified elsewhere in these Contract Documents. All costs represented will include a pro rata distribution for overhead and profit: No separate item shall be shown for overhead and profit.

C. Where the work of several trades is combined into one activity, the Contractor shall furnish for each such combined activity the cost breakdown of each trade on sheets separate from the network diagram. The sum of the costs for each trade shall equal the total dollar value of each such combined activity.

D. Revisions to the schedule may require reallocation of costs. Revised activity cost data shall be submitted with revised Schedules as necessary, and a revised Payment Request form will be provided after approval of revised cost allocations.

1.5 PROGRESS REPORTING, UPDATING, AND REVISIONS

A. On a date mutually agreed upon by the County and the Contractor, a job site progress meeting will be held each month at which time the schedule will be reviewed and updated. Attendees of this meeting shall include the County, the General Contractor and subcontractors if requested by the County. The Contractor shall have his copy of the Payment Request form and all other data required by the Contract Documents accurately filled in and completed prior to this meeting. Job progress and the Schedule will be reviewed to verify:

1. Payment due to the Contractor based on percentage complete of items in the submitted Payment Request form.

2. Logic, time and cost data for change order work that is to be incorporated into the schedule or Payment Request form.

3. Status of as-built record drawings and as-built record specifications.

B. The Contractor shall submit a narrative report as a part of his monthly progress review and update in a form agreed upon by the Contractor and the County.

The narrative report shall include:

1. Actual start and finish dates of activities completed during update period since the last accepted revision.

2. Explanation of all changes in logic or in the scheduled work sequence, in durations, manpower and equipment.

3. A description of the critical path for the remainder of the project.

4. An explanation of corrective action taken or proposed.

C. After each monthly update or revision, the Contractor shall submit to the County one complete schedule showing all revisions and changes in accordance with the monthly review meeting.

D. Within five (5) working days after receipt of notice from the County, the Contractor shall submit a revised Schedule for any of the following reasons:

1. When delay in completion of any activity or group of activities indicates an overrun of the contract time or milestone requirement, by 20 working days or ten percent (10%) of the remaining duration, whichever is less.

2. Delays in submittals or deliveries or work stoppage are encountered which make replanning or rescheduling of the work necessary.

3. The schedule does not represent the actual prosecution and progress of the project as being performed in the field.

E. Acceptance of any revised Schedule and all supporting data is contingent upon compliance with all other paragraphs of this section and any other previous agreements or requirements with or by the County.

F. The cost of revisions to the Schedule resulting from contract changes shall be included in the cost for the change in work, and shall be based on the complexity of the revisions or contract change, man-hours expended in analyzing the change, and the total cost of the change.

1.6 RESPONSIBILITY FOR COMPLETION

A. The Contractor agrees that whenever it becomes apparent from the monthly progress review meeting or the schedule that contract completion dates will not be met, he shall take some or all of the following action at no additional cost to the Owner:

1. Increase construction manpower in such quantities and crafts as will bring the progress of the work into conformance with all other requirements of this section.

2. Increase the number of working hours per shift, shifts per working day, workdays per week, the amount of construction equipment or any combination of the foregoing, to bring the scheduling and progress of the work into conformance with all requirements of the Contract Documents.

3. Reschedule the work under this contract in conformance with all other contract requirements to demonstrate completion of the contract work within the contract time.

1.7 ADJUSTMENT OF THE CONTRACT TIME

A. The contract time will be adjusted only for causes specified in the Contract Documents. In the event the Contractor requests an adjustment of the contract time, he shall furnish such justification, schedule data and supporting evidence as the Project Manager may deem necessary for a determination as to whether or not the Contractor is entitled to an adjustment of time under the provisions of the contract. Submissions of proof based on revised activity logic, durations and costs is obligatory with any request.

B. The Contractor shall submit each request for an adjustment in the contract time to the Project Manager in accordance with all other requirements of the Contract Documents. The Contractor shall include, as part of each request:

1. Justification for the delay in narrative form.

2. A subnetwork showing all CPM logic revisions, duration changes, and cost changes, for the work in question and its relationship to other activities on the Schedule.

C. The schedule must clearly display that the Contractor has used, in full, all the float time available for the work involved in this request. Actual delays in activities, which according to the schedule, do not affect the critical path work in the Schedule, will not be the basis for an adjustment to the contract time.

D. The Project Manager's determination as to the adjustment of the contract time shall be based upon the latest schedule that has been accepted at the time of the alleged delay and all other relevant information. The Contractor shall submit with every request, an updated Schedule whenever the actual field progress of the work does not conform to the accepted schedule in force at the time of the alleged delay. The data if approved by the Project Manager shall be included in the next monthly updating of the schedule.

E. The Project Manager shall, within a reasonable time after receipt of a request for extension of the contract time and supporting evidence, review the facts and shall advise the Contractor, in writing of his decision.

F. When the Project Manager has not yet made a final determination as to the adjustment of the contract time, and the parties are unable to agree as to the amount of the adjustment to be reflected in the Schedule, the Contractor shall reflect that amount of time adjustment in the Schedule as the Project Manager may determine to be appropriate for interim purposes. It is understood and agreed that any such interim determination by the Project Manager shall not be binding and shall be made only for the purpose of continuing to schedule the work until such time as the Project Manager has made a final determination as to any adjustment of the contract time. The Contractor shall revise the Schedule prepared thereafter in accordance with the final decision.

END OF SECTION

SECTION 01 33 00

SUBMITTAL PROCEDURES

PART 1 GENERAL

1.1 SUMMARY

A. Section includes:
1. General Submittal Procedures
2. Physical Submittal Procedure
3. Contractor Responsibilities
4. Product Data
5. Shop Drawings
6. Samples
7. Manufacturer’s Instructions
8. Manufacturers' certificates.
9. Agency deferred approvals.

1.2 DESCRIPTION

A. Types of Submittals: Submittal procedures specified in this section include construction progress schedules, shop drawings, product data, samples, manufacturers’ certificates, manufacturer's installation instructions, and agency deferred approvals.

B. Intent: Architect's review of shop drawings is intended to be a preview of what the Contractor intends to provide, and will function as an effort to foresee unacceptable materials or assemblies and to avoid the possibility of their rejection at the Project Site. Architect will review submittals only for conformance with the design concept of the Project and with the information given in the Contract Documents.

C. The Architect's review of shop drawings will be general and shall not be construed:
1. As permitting departure from the Contract requirements except as otherwise provided for under "substitution" provisions of Section 01 62 00;
2. As relieving Contractor of responsibility for omissions or errors, including details, dimensions, materials, etc.;
3. That review of a separate item indicates acceptance of an assembly in which the item functions. Architect will only review acceptance of an assembly in which the item functions. Architect will only review submittals required by Contract Documents for conformance with design concept of the Project and with the information given in the Contract Documents.

1.3 GENERAL SUBMITTAL PROCEDURES

A. All submittals shall be made electronically through the Alliance2Build. Only Samples for verification should be submitted physically.

B. Transmit each Sample submittal with AIA Form G810 or other Architect-accepted form.

C. Sequentially number the submittals and transmittal forms as shown in each section requiring submittals with the project manual section number from which the submittal is being

requested followed by the alphabetic suffix. (I.E. 01 33 00A) Resubmittals are to have original number followed by an underscore and an additional numerical suffix beginning with ‘1’ and then consecutively thereafter with each resubmittal. (I.E. 01 33 00A_1)

D. Identify Project, Contractor, Subcontractor or supplier; pertinent Drawing sheet and detail number(s), and specification Section number, as appropriate.

E. Apply Contractor's stamp and signature or initial (electronically or physically) certifying that review, verification of Products required, field dimensions, adjacent construction Work, and coordination of information, is in accordance with the requirements of the Work and Contract Documents.

F. Unless otherwise authorized by the Architect, all of the submittals required by a specification section shall be submitted together at the same time. Electronic submittals of product data, shop drawings, etc. may be submitted ahead of physical color samples with approval of the Architect. Submittals that do not include all required submittals for a given specification section will be returned without review.

G. Schedule submittals to expedite the Project. Late submittals shall not be considered a valid reason for product substitution. Deliver Samples to architect at business address. Coordinate submission of related items.

H. Identify variations from Contract Documents and Product or system limitations that may be detrimental to successful performance of the completed Work.

I. Substitutions must be submitted according to Section 01 62 00. Substitutions submitted without following this procedure will be rejected.

J. Provide space for Contractor and Architect review stamps.

K. Revise and resubmit submittals as required, identify all changes made since previous submittal.

L. Distribute copies of reviewed submittals to concerned parties. Instruct parties to promptly report any inability to comply with provisions.

1.4 PHYSICAL SUBMITTAL PROCEDURES

A. Samples and Color Charts shall be physical submittals with accurate representation of color and other physical characteristics.

B. Submit a minimum of two (2) copies of each submittal including samples and resubmittals, as the Architect will retain a one.

1.5 CONTRACTOR RESPONSIBILITIES

A. Review shop drawings, product data and samples prior to submission.

B. Determine and verify:
1. Field measurements.
2. Field construction criteria.
3. Catalog numbers and similar data.
4. Conformance with specifications.
5. Conformance with applicable codes.

C. Submittals giving inadequate indication of contractor review and approval will be returned without review, for resubmission.

D. Coordinate each submittal with requirements of the Work and of the Contract Documents.

E. Notify the Architect in writing, at time of submission, of any deviations in the submittals from requirements of the Contract Documents.

F. Begin no fabrication or construction activity that requires submittals until return of submittals with Architect's stamp and initials or signature indicating finish review.

G. After Architect's final review, distribute copies.

1.6 PRODUCT DATA

A. Mark the submittal to identify applicable products, models, options, and other data. Supplement manufacturers' standard data to provide information unique to this Project.

1.7 SHOP DRAWINGS

A. After review and distribution in accordance with Submittal Procedures, retain one copy of all reviewed shop drawings at the job and label them "PROJECT RECORD" as described in Section 01 77 00 Execution and Close-out Requirements.

1.8 SAMPLES

A. Submit samples to illustrate functional and aesthetic characteristics of the Product, with integral parts and attachment devices. Provide units identical with final condition of proposed materials or products for the work. Coordinate sample submittals for interfacing work.

B. Submit samples of finishes from the full range of manufacturers' standard colors textures, and patterns for Architect's selection.

C. Include identification on each sample, with full Project information.

D. Submit the number or samples specified in individual specification Sections; one of which will be retained by Architect.

E. Reviewed samples which may be used in the Work are indicated in individual specification Sections.

1.9 MANUFACTURER'S INSTRUCTIONS

A. When specified in individual specification Sections, submit manufacturers' printed instructions for delivery, storage, assembly, installation, start-up, adjusting, and finishing, in quantities specified for Product Data.

B. Identify conflicts between manufacturers' instructions and Contract Documents.

1.10 MANUFACTURER'S CERTIFICATES

A. When specified in individual specification Sections, submit manufacturers' certificate to Architect for review, in quantities specified for Product Data.

B. Indicate material or product conforms to or exceeds specified requirements. Submit supporting reference date, affidavits, and certifications as appropriate.

C. Certificates may be recent or previous test results on material or Product, but must be acceptable to Architect.

1.11 ACTION ON SUBMITTALS

A. Architect's Action: Architect will review each submittal, mark with "Action" and where possible, return within a reasonable period of time from date of receipt. Where submittal must be held for coordination, Contractor will be so advised without delay. Action markings shall be interpreted as follows:

No Exceptions Noted	NEN	Work may proceed, provided it complies with Contract Documents.
Furnish As Corrected	FAC	Work may proceed, provided it complies with notations and corrections indicated on submittal and with Contract Documents.
Revise and RESubmit	RES	Do not proceed with work. Revise submittal in accordance with notations thereon, and resubmit without delay to obtain a different action marking.
Submit Additional Material	SAM	Do not proceed with work. Resubmit submittal with additional material as requested without delay to obtain a different action marking.
REJected	REJ	Do not proceed with work. Revise submittal in accordance with notations thereon, and resubmit without delay to obtain a different action marking.
See Summary Sheet	SSS	Refer to summary sheet attached to submittal for direction.
Reviewed By Consultant	RBC	Submittal has been reviewed by the Architect's consultant. Refer to consultant submittal stamp for direction.

B. Sample Architect's Action Stamp:

Submittal Number: _____

☐ No Exceptions Taken ☐ REJected
☐ Furnish As Corrected ☐ See Summary Sheet
☐ Revise and RESubmit ☐ Reviewed By Consultant
☐ Submit Additional Materials ☐ Not Reviewed

Notes and/or comments made on shop drawings during this review do not relieve Contractor from compliance with requirements of the Contract Documents. This review has been performed by the Architect to check general conformance with the design concept of the project and general compliance with the information in the Contract Documents. Review of a specific item shall not include review of an assembly of which said item is a component. Contractor is responsible for confirming and correlating quantities and dimensions; selecting fabrication processes and construction techniques; coordinating his/her work with that of other trades and performing his/her work in a safe and satisfactory manner. This review shall not be interpreted as an approval of Contractor's means and methods of construction.

NICHOLS, MELBURG & ROSSETTO
300 Knollcrest Drive
Redding, CA 96002

By: _____ Date: _____

PART 2 PRODUCTS

Not Used

PART 3 EXECUTION

Not Used

END OF SECTION

SECTION 01 40 00

QUALITY REQUIREMENTS

PART 1 GENERAL

1.1 SUMMARY

A. This section describes general quality control requirements.
   1. General quality control.
   2. Manufacturers' field services.
   3. Mock-ups.
   4. Independent testing laboratory services.
   5. Inspection Services.

1.2 QUALITY CONTROL, GENERAL

A. Maintain quality control over suppliers, manufacturers, products, services, site conditions, and workmanship, to produce work of specified quality.

B. Comply fully with manufacturers' instructions, including each step in sequence.

C. Should manufacturers' instructions conflict with Contract Documents, request clarification from Architect/Engineer before proceeding.

D. Secure products in place with positive anchorage devices designed and sized to withstand stresses, vibration, physical distortion or disfigurement.

1.3 MANUFACTURER'S FIELD SERVICES

A. When specified in respective Specification sections, require manufacturer or supplier to have qualified personnel provide on-site observations and recommendations.
   1. Observe field conditions, including conditions of surfaces and installation.
   2. Observe quality of workmanship.
   3. Provide recommendations to assure acceptable installation and workmanship.
   4. Where required, start, test, and adjust equipment as applicable.

B. Representative shall submit written report to Architect or Owner listing observations and recommendations.

1.4 MOCK-UPS

A. Erect field samples and field mock-ups at locations on site as approved in advance and in accordance with requirements where included in Specifications section.
   1. Test mock-ups requiring special equipment may be erected at location having access to necessary equipment; coordinate with Architect.

B. Field samples and mock-ups not approved and not capable of being acceptably revised shall be removed from site.

C. Approved field samples and mock-ups may be used as part of Project.

1.5 INDEPENDENT TESTING LABORATORY SERVICES

A. County will employ and pay for services of an approved independent testing laboratory to perform inspections, tests, and other services required by applicable codes and various Specification sections.
   1. County or Architect may also require independent testing of items where doubts exists that product or system conforms to Contract Documents.
      a. Contractor shall employ and pay for testing laboratory under above circumstances.

B. Services shall be performed in accordance with requirements of governing authorities and with specified standards.

C. Reports will be submitted to County and Architect in duplicate giving observations and results of tests, indicating compliance or non-compliance with specified standards and with Contract Documents.
   1. Where required, testing laboratory will submit copy of test results directly to enforcing agency.

D. Contractor shall cooperate with testing laboratory personnel; furnish tools, samples of materials, design mix, equipment, storage and assistance as requested.
   1. Notify County, Architect and testing laboratory sufficiently in advance of expected time for operations requiring testing services.

1.6 INSPECTION SERVICES

A. County may employ and pay for services of a project inspector to provide continuous, full time inspection of the project. The duties of the inspector are defined in Section 4-342, California Building Standards Administrative Code (Part 1, Title 24, CCR).
   1. Notify Architect and Inspector 48 hours prior to expected time for operations requiring specific inspection.
   2. Make arrangements with independent firm and pay for additional samples and tests required for Contractor's use.

PART 2 PRODUCTS
Not Used

PART 3 EXECUTION
Not Used

END OF SECTION

SECTION 01 42 00

REFERENCES

PART 1 GENERAL

1.1 SUMMARY

A. Definitions.

B. Schedule of references.

C. Schedule of governing codes.

1.2 DEFINITIONS

A. General: Basic Contract definitions are included in the Conditions of the Contract.

B. "Approved": When used to convey Architect's action on Contractor's submittals, applications, and requests, "approved" is limited to Architect's duties and responsibilities as stated in the Conditions of the Contract.

C. "Directed": A command or instruction by Architect. Other terms including "requested," "authorized," "selected," "approved," "required," and "permitted" have the same meaning as "directed."

D. "Indicated": Requirements expressed by graphic representations or in written form on Drawings, in Specifications, and in other Contract Documents. Other terms including "shown," "noted," "scheduled," and "specified" have the same meaning as "indicated."

E. "Regulations": Laws, ordinances, statutes, and lawful orders issued by authorities having jurisdiction, and rules, conventions, and agreements within the construction industry that control performance of the Work.

F. "Furnish": Supply and deliver to Project site, ready for unloading, unpacking, assembly, installation, and similar operations.

G. "Install": Operations at Project site including unloading, temporarily storing, unpacking, assembling, erecting, placing, anchoring, applying, working to dimension, finishing, curing, protecting, cleaning, and similar operations.

H. "Provide": Furnish and install, complete and ready for the intended use.

I. "Project Site": Space available for performing construction activities. The extent of Project site is shown on Drawings and may or may not be identical with the description of the land on which Project is to be built.

1.3 QUALITY ASSURANCE

A. For products or workmanship specified by association, trade, or Federal Standards, comply with requirements of the standard, except when more rigid requirements are specified or are

required by applicable codes.

B. Conform to reference standard by date of issue current on date of Contract Documents unless specifically noted.

C. Obtain copies of standards when required by Contract Documents directly from publication source.

D. Maintain copy at jobsite during submittals, planning, and progress of the specific work, until Substantial Completion.

E. Should specified reference standards conflict with Contract Documents, request clarification from Architect/Engineer before proceeding.

F. The contractual relationship of the parties to the Contract shall not be altered from the Contract Documents by mention or inference otherwise in any reference document.

G. Schedule of references is general in nature; disregard any reference standard listed that is not applicable to this project.

1.4 STANDARDS AND REGULATIONS

A. Abbreviations and Acronyms for Standards and Regulations: Where abbreviations and acronyms are used in Specifications or other Contract Documents, they shall mean the recognized name of the standards and regulations in the following list.

ABA	Architectural Barriers Act
ADA	Americans with Disabilities Act
CFR	Code of Federal Regulations
CRD	Handbook for Concrete and Cement
DOD	Department of Defense Military Specifications and Standards
DSCC	Defense Supply Center Columbus (See FS)
FED-STD	Federal Standard (See FS)
FS	Federal Specification
FTMS	Federal Test Method Standard (See FS)
ICC-ES	ICC Evaluation Service, Inc.
MIL	(See MILSPEC)
MILSPEC	Military Specification and Standards
MIL-STD	(See MILSPEC)
NES	National Evaluation Service (See ICC-ES)
UFAS	Uniform Federal Accessibility Standards

B. Schedule of Governing Codes:
1. California Code of Regulations (C.C.R.) PARTIAL LIST OF APPLICABLE CODES AS OF January 1, 2023
   a. 2022 California Administrative Code (CAC), Part 1, Title 24 CCR
   b. 2022 California Building Code (CBC), Part 2, Title 24 CCR
      (2021 International Building Code, Vol. 1 & 2, and 2022 California amendments)
   c. 2022 California Electrical Code (CEC), Part 3, Title 24 CCR
      (2021 National Electrical Code and 2022 California Amendments)
   d. 2022 California Mechanical Code (CMC), Part 4, Title 24 CCR
      (2021 IAPMO Uniform Mechanical Code and 2022 California amendments)
   e. 2022 California Plumbing Code (CPC), Part 5, Title 24 CCR

(2021 IAPMO Uniform Plumbing Code and 2022 California amendments)
f. 2022 California Energy Code (CEC), Part 6, Title 24 CCR
g. 2022 California Fire Code (CFC), Part 9, Title 24 CCR
(2021 International Fire Code and 2022 California Amendments)
h. 2022 California Existing Building Code (CEBC), Part 10, Title 24 CCR
(2021 International Existing Building Code and 2022 California Amendments)
i. 2022 California Green Building Standards Code (CALGreen), Part 11, Title 24 CCR
j. 2022 California Referenced Standards Code, Part 12, Title 24 CCR
k. Title 19 CCR, Public Safety, State Fire Marshal Regulations
l. Title 8 Elevator Safety Orders for Elevator Safety Standards

2. California Code of Regulations (C.C.R.) PARTIAL LIST OF APPLICABLE STANDARDS
(The latest edition of each of the below standards shall be used)
a. NFPA 10 – Standard for Portable Fire Extinguishers (CA amended)
b. NFPA 13 - Standard for the Installation of Sprinkler Systems (CA amended)
c. NFPA 14 - Standard for the Installation of Standpipe and Hose Systems (CA amended)
d. NFPA 17 - Standard for Dry Chemical Extinguishing Systems
e. NFPA 17A - Standard for Wet Chemical Extinguishing Systems
f. NFPA 20 - Standard for the Installation of Stationary Pumps for Fire Protection
g. NFPA 22 - Standard for Water Tanks for Private Fire Protection
h. NFPA 24 - Standard for the Installation of Private Fire Service Mains and their Appurtenances (CA amended)
i. NFPA 72 - National Fire Alarm and Signaling Code (CA amended)
j. NFPA 80 - Standard for Fire Doors and Other Opening Protectives
k. NFPA 2001 - Standard on Clean Agent Fire Extinguishing Systems (CA amended)
l. UL 300 - Standard for Fire Testing of Fire Extinguishing Systems for Protection of Commercial Cooking Equipment
m. UL 464 - Audible Signaling Devices for Fire Alarm and Signaling Systems Including Accessories
n. UL 521 - Standard for Heat Detectors for Fire Protective Signaling Systems
o. UL 1971 - Standard for Signaling Devices for the Hearing Impaired
p. ICC 300 - Standard for Bleachers, Folding and Telescopic Seating, and Grandstands
3. For a complete list of applicable NFPA standards refer to 2022 CBC (SFM) Chapter 35 and California Fire Code Chapter 80.

4. See California Building Code Chapter 35 for State of California amendments to the NFPA Standards.

5. Standard Specifications for Public Works Constructions.

1.5 SCHEDULE OF REFERENCES

A. Industry Organizations: Where abbreviations and acronyms are used in Specifications or other Contract Documents, they shall mean the recognized name of the entities listed in the 2019 California Building Code Title 24, Part 2, Chapter 35.

1.6 JOB-SITE PUBLICATIONS

A. Contractor shall keep a copy of Title 24, Parts 1 through 5, at the jobsite at all times.

PART 2 PRODUCTS

Not Used

PART 3 EXECUTION

3.1 SUMMARY

A. All work shall be done in accordance with the codes referenced in Section 1.4.B Schedule of Governing Codes, and as required by all agencies having jurisdiction.

END OF SECTION

BIDDER'S BOND
(Public Contract)

KNOW ALL MEN BY THESE PRESENTS: That as Principal _____(herein called "Principal") and as surety _____(hereinafter called "Surety" are held and firmly bound unto the **County** of **Tehama** (herein called the "Obligee"), in the just and full sum of ten percent (10%) of the total amount of the base bid submitted by Principal for the herein described work of improvement, which sum is Dollars ($_____) lawful money of the United States of America, for the payment of which, well and truly to be made, we hereby bind ourselves and our, and each of our, heirs, executors, administrators, successors, and assigns, jointly and severally firmly by these presents.

WHEREAS, Principal is bidding, or is about to bid, for the following described work of improvement, all in accordance with the Notice to Contractors and the Contract Documents for the project entitled:

"*CORNING VETERAN'S HALL REMODEL*"

NOW, THEREFORE, THE CONDITION OF THE OBLIGATION IS SUCH THAT, if Obligee shall make an award to Principal for said work of improvement according to the terms of such bid, and Principal shall duly execute, or cause to be executed, and delivered to Obligee the Contract, bonds, and evidence of insurance coverage as, and within the time, required by the Contract Documents for the above-named project, which Contract Documents are incorporated herein by this reference, then this obligation shall be null and void; OTHERWISE, it shall remain in full force and effect, and if Obligee shall make such an award to Principal and Principal shall fail to execute, or caused to be executed and delivered to Obligee said instruments as required by the Contract Documents, then surety will pay Obligee the full sum of the bond.

No extension of time granted to the Principal and no change or alteration in any of the terms of the bid or bid requirement, whether made after notice or not, shall release or otherwise affect the obligations of Surety hereunder, and Surety waives notice of any such extension, change, or alteration. Surety, by the execution of this bond, represents and warrants that this bond has also been duly executed by Principal with proper authority, and Surety hereby waives any defense which it might have by reason of any failure of Principal to execute or properly execute this bond.

In the event suit is brought upon this bond by Obligee and judgment is recovered by Obligee, court costs, including reasonable attorneys' fees, shall be an additional obligation of this bond for which Principal and Surety shall be liable.
Signed and sealed the _____day of _____, 20__.

_____ _____

_____ _____
PRINCIPAL (Notary Certificate Attached) SURETY (Notary Certificate Attached)

NOTE TO SURETY COMPANY: The following form of acknowledgment should be used. If any other form of acknowledgment is used, there must be submitted a certified copy of unrevoked resolution of authority for the attorney-in-fact.

A notary public or other officer completing this certificate verifies only the identity of the individual who signed the document, to which this certificate is attached, and not the truthfulness, accuracy, or validity of that document.

NOTARY ACKNOWLEDGMENT

STATE OF _____)

COUNTY OF_____)

On _____, before me, _____, a Notary Public in
Name of Notary Public

and for said State, personally appeared _____,
Name(s) of Signer(s)

who proved to me on the basis of satisfactory evidence to be the person(s) whose name(s) is/are subscribed to the within instrument and acknowledged to me that he/she/they executed the same in his/her/their authorized capacity(ies), and that by his/her/their signature(s) on the instrument the person(s), or the entity upon behalf of which the person(s) acted, executed the instrument.

I certify under PENALTY OF PERJURY under the laws of the State of California that the foregoing paragraph is true and correct.

WITNESS my hand and official seal

_____ (SEAL)
Signature of Notary Public

A notary public or other officer completing this certificate verifies only the identity of the individual who signed the document, to which this certificate is attached, and not the truthfulness, accuracy, or validity of that document.

NOTARY ACKNOWLEDGMENT

STATE OF _____)

COUNTY OF_____)

On _____, before me, _____, a Notary Public in
Name of Notary Public

and for said State, personally appeared _____,
Name(s) of Signer(s)

who proved to me on the basis of satisfactory evidence to be the person(s) whose name(s) is/are subscribed to the within instrument and acknowledged to me that he/she/they executed the same in his/her/their authorized capacity(ies), and that by his/her/their signature(s) on the instrument the person(s), or the entity upon behalf of which the person(s) acted, executed the instrument.

I certify under PENALTY OF PERJURY under the laws of the State of California that the foregoing paragraph is true and correct.

WITNESS my hand and official seal

_____ (SEAL)
Signature of Notary Public

SECTION 01 50 00

TEMPORARY FACILITIES AND CONTROLS

PART 1 GENERAL

1.1 SUMMARY

A. This section describes temporary construction facilities and temporary controls.
   1. Temporary Utilities: Electricity, lighting, heat, ventilation, telephone service, water, and sanitary facilities.
   2. Temporary Controls: Barriers, enclosures and fencing, protection of the Work, construction aids, water control and construction waste management program.
   3. Construction Facilities: Access roads, parking, progress cleaning, Project identification, Field offices, telephone service, and storage.

B. Provide temporary construction facilities and temporary controls as required to conform to applicable authorities and as required to complete Project in accordance with Contract Documents.
   1. Authorities: Contact governing authorities to establish extent of temporary facilities and temporary controls required by authorities.

1.2 ELECTRICITY AND LIGHTING

A. Provide electrical service required for construction operations, with branch wiring and distribution boxes located to allow service and lighting by means of construction-type power cords.
   1. Contractor shall arrange and pay for temporary power to the site.
   2. Comply with NEMA, NECA and UL standards and regulations for temporary electric service. Install service in compliance with CEC.

B. Provide lighting for construction operations.
   1. Permanent lighting may not be used during construction; maintain temporary lighting.

1.3 HEAT AND VENTILATION

A. Provide heat and ventilation as required to maintain specified conditions for construction operation, to protect materials and finishes from damage due to temperature and humidity.

B. Systems being installed as part of the Work shall not be used for construction heat and ventilation. All ductwork, vents and diffusers shall be completed sealed from construction.

C. Ventilate enclosed areas to assist cure of materials, to dissipate humidity, and to prevent accumulation of dust, fumes, vapors, or gases.

1.4 WATER AND SANITARY FACILITIES

A. Contractor may connect to on site supply at no charge.

B. Provide and maintain required sanitary facilities and enclosures. Existing or new facilities shall not be used.

1.5 ACCESS ROADS

A. Construct and maintain temporary roads accessing public thoroughfares to serve construction area.

B. Extend and relocate as Work progress requires. Provide detours necessary for unimpeded traffic flow.

C. Provide and maintain access to fire hydrants, free of obstructions.

D. Provide means of removing mud from vehicle wheels before entering streets.

1.6 PARKING

A. Parking will be allowed on the project site.

1.7 CONSTRUCTION AIDS

A. Noise, Dust and Pollution Control: Provide materials and equipment necessary to comply with local requirements for noise, dust and pollution control.

B. Fire Protection: Maintain on-site fire protection facilities as required by applicable authorities and insurance requirements.

C. Dewatering: Provide and operate drainage and pumping equipment; maintain excavations and site free of standing water.

1.8 ENCLOSURES

A. Temporary Exterior Closures: Provide temporary weather-tight closures for exterior openings for acceptable working conditions, for protection for materials, to protect interior materials from dampness, for temporary heating, and to prevent unauthorized entry.
   1. Provide doors with self-closing hardware and locks.

1.9 BARRIERS

A. Barriers: Provide barriers as required to prevent public entry to construction areas and to protect adjacent properties from damage from construction operations.
   1. Fence: Provide minimum 6 foot high commercial grade chain link or painted solid wood fence around construction site; equip with gates with locks.

B. Barricades: Provide barricades as required by governing authorities.

C. Tree Protection: No parking of vehicles will be allowed under trees. Provide barriers around trees and plants designated to remain; protect plants at their drip lines against vehicular traffic. Protect against stored materials, dumping, chemically injurious materials, and puddling or continuous running water.

1.10 CLEANING DURING CONSTRUCTION

A. Control accumulation of waste materials and rubbish; recycle or dispose of off-site.

B. Clean interior areas prior to start of finish work, maintain areas free of dust and other contaminants during finishing operations.

1.11 PROJECT IDENTIFICATION

A. Project Sign: Provide minimum 32 square foot Project identification sign of wood frame and exterior grade plywood construction, painted, with exhibit lettering by professional sign painter.
   1. Design: As furnished by Architect.
   2. Submit to County and Architect additional names or changes proposed to Project sign for prior written approval.
   3. Erect on site at location established by Architect.

B. Other Signs: Subject to approval of Architect and County.

1.12 FIELD OFFICES, COMMUNICATIONS, AND STORAGE

A. Office: Provide weather-tight field office, with lighting, electrical outlets, data outlets, heating, and ventilating equipment, and equipped with furniture.

B. A space near the area of the work will be designated by the County for the contractor's use as a field office during construction.
   1. Meeting Space: In addition, provide space for Project meetings with table and chairs to accommodate minimum six persons.

C. COMMUNICATION
   1. Telephone Service: Provide telephone service to field office. Cellular service is acceptable.
   2. Copier: Provide separate plain paper copier with enlargement and reduction capability.
   3. Internet Service: Provide broadband internet service to field office.
   4. Computer: Provide desktop computer system at Project field office with e-mail capacity and word processing system compatible with Architect’s systems and Alliance2Build project Management system; include separate e-mail line; provide plain paper printer.
      a. Digital Camera: Maintain operational digital camera on-site during construction long with software allowing transmission of digital pictures taken on-site via e-mail to County and Architect.

D. Storage for Tools, Materials, and Equipment: Limit on-site storage to Project area; provide weather-tight storage, with heat and ventilation for products requiring controlled conditions.
   1. Maintain adequate space for organized storage and access.
   2. Provide lighting for inspection of stored materials.

PART 2 PRODUCTS

Not Used

PART 3 EXECUTION

3.1 WATER CONTROL

A. Grade site to drain. Maintain excavations free of water. Provide, operate, and maintain pumping equipment.

B. Protect site from puddling or running water. Provide water barriers as required to protect site from soil erosion.

3.2 PROTECTION OF INSTALLED WORK

A. Protect installed Work and provide special protection where specified in individual specification Sections.

B. Provide temporary and removable protection for installed Products. Control activity in immediate work area to minimize damage.

C. Provide protective coverings at walls, projections, jambs, sills, and soffits of openings.

D. Protect finished floors, stairs, and other surfaces from traffic, dirt, wear, damage, or movement of heavy objects, by protecting with durable sheet materials.

E. Prohibit traffic or storage upon waterproofed or roofed surfaces. If traffic or activity is necessary, obtain recommendations for protection from waterproofing or roofing material manufacturer.

F. Prohibit traffic from landscaped areas.

3.3 SECURITY

A. Provide security and facilities to protect Work, and existing facilities, and County's operations from unauthorized entry, vandalism, or theft.

B. Coordinate with County's security program.

3.4 CONSTRUCTION WASTE

A. Construction Waste Management: Comply with applicable regulations for diverting Project waste from landfill; aim for waste management goal of 50% or higher.
   1. Effect optimum control of solid wastes.
   2. Prevent environmental pollution and damage.

B. Reports: Provide as required by applicable authorities.

C. Recycling: Implement recycling program that includes separate collection of waste materials of types as applicable to Project; recycling program to be applied by Contractors and subcontractors.

D. Handling: Keep materials free of dirt, adhesives, solvents, petroleum contamination, and other substances deleterious to recycling process.
   1. Clean materials contaminated prior to placing in collection containers.
   2. Arrange for collection by or delivery to appropriate recycling center or transfer station that accepts construction and demolition waste for purpose of recycling.

E. Participate in Re-Use Programs: Rebates, tax credits, and other savings obtained for recycled or re-used materials shall accrue to Contractor.

3.5 REMOVAL

A. Remove temporary materials, equipment, services, and construction prior to Substantial Completion Inspection.

B. Clean and repair damage caused by installation or use of temporary facilities.

C. Restore existing facilities used during construction to specified or original condition.

END OF SECTION

SECTION 01 60 00

PRODUCT REQUIREMENTS

PART 1 GENERAL

1.1 SUMMARY

A. This section describes basic product requirements governing material and equipment.
   1. General product requirements.
   2. Product list.
   3. Quality assurance.
   4. Delivery, storage, and handling.

1.2 GENERAL PRODUCTS REQUIREMENTS

A. Products include material, equipment, and systems.

B. Comply with Specifications, referenced standards, and applicable codes and regulations as minimum requirements.

C. Provide new materials except as specifically allowed by Contract Documents.

D. Materials to be supplied in quantity within a Specification section shall be by one manufacturer, shall be the same, and shall be interchangeable.

E. Provide equipment and systems composed of materials from a single manufacturer except where otherwise recommended by equipment or systems manufacturer or where otherwise indicated in Contract Documents.

1.3 SUBMITTALS

A. Product List: Prior to submittal of second Request for Payment, submit to Architect complete list of major products that are proposed for installation, with name of manufacturer, trade name, and model.
   1. Tabulate products by Specification number and title.

B. Substitutions: Refer to Section 01 62 00 - Product Options.

1.4 QUALITY ASSURANCE

A. Comply with industry standards and applicable codes except when more restrictive tolerances or requirements indicate more rigid standards or precise workmanship.

B. Comply with manufacturer’s instructions.

C. Perform work by persons qualified to produce workmanship of specified quality.

D. Install products straight, true-to-line, and in correct relationship to adjacent materials, with hairline joints, free of rough, sharp and potentially hazardous edges.

E. Secure products in place with positive anchorage devices designed and sized to withstand

stresses, vibration, and racking.
1. Seismic Anchors: Conform to code requirements.

1.5 DELIVERY, STORAGE, AND HANDLING

A. Transport products by methods to avoid product damage, deliver in undamaged condition in manufacturer's unopened containers or packaging.

B. Store products in accordance with manufacturer's instructions, with seals and labels intact and legible.

C. Store sensitive products in weather-tight enclosures; maintain within temperature and humidity ranges required by manufacturer's instructions.

D. For exterior storage of fabricated products, place on sloped supports above ground.

E. Store loose granular materials on solid surfaces in a well-drained area; prevent mixing with foreign matter.

F. Arrange storage to provide access for inspection; periodically inspect to assure products are undamaged and are maintained under required conditions.

G. Provide equipment and personnel to handle products by methods to prevent soiling and prevent damage.

H. Promptly inspect shipments to assure products comply with requirements, quantities are correct, and products are undamaged.

I. Immediately remove from Project products damaged, wet, stained, and products with mold and products with mildew.
1. Take special care to prevent absorbent products such as gypsum board and acoustical ceiling units from becoming wet.

PART 2 PRODUCTS
Not Used

PART 3 EXECUTION
Not Used

END OF SECTION

SECTION 01 62 00

PRODUCT OPTIONS

PART 1 GENERAL

1.1 SUMMARY

A. Provide products listed in Contract Documents, products by manufacturers listed in Contract Documents, and products meeting specified requirements.
   1. Contract Amount: Base on materials and products included in Contract Documents.
      a. Where listed in Contract Documents, materials and products by manufacturers not listed shall not be used without County's and Architect's approval of Contractor's written request for substitution.

B. Procedures are described for requesting substitution of unlisted materials in lieu of materials named in Specifications or approved for use in addenda.

1.2 CONTRACTOR'S OPTIONS

A. Products Identified by Reference Standards: Select product meeting referenced standard for products specified only by reference standard.

B. Named Manufacturers and Named Products: Select products of any named manufacturer meeting Specifications for products specified by naming one or more products or manufacturers.

C. Substitutions for Named Manufacturers and Named Products: Submit request for substitution for products and for manufacturers not specifically named where products or manufacturers are named in Specifications.

D. "Or Equal" Clauses: Submit request for substitution for product or manufacturer not specifically named in Specifications where terms "or equal", "or accepted equal", or similar references are made.

1.3 SUBSTITUTIONS

A. Architect/Engineer will consider requests for Substitutions only within 20 days after date established in Notice to Proceed.

B. Substitutions may be considered when a product becomes unavailable through no fault of the Contractor.

C. Substitutions will not be considered when they are indicated or implied on shop drawing or product data submittals, without separate written request, or when acceptance will require revision to the Contract Documents.

D. Substitution Submittal Procedure:
   1. Submit three physical copies or one electronic copy of Request for Substitution data for consideration. Submit completed "Product Substitution Request Form 01 62 33". Limit each request to one proposed Substitution.

2. Submit shop drawings, product data, and certification test results attesting to the proposed product equivalence.
3. The Architect will notify Contractor, in writing, of decision to accept or reject request.
4. Incomplete substitution requests will be rejected without explanation.
5. The Architect may reject any substitution request on the basis of aesthetics.

E. "Accepted Equal" or "Equal" shall mean in the opinion of the Architect.

F. Substitutions will not be considered for acceptance when:
1. They are indicated or implied on submittals without a formal request from Contractor.
2. They are requested directly by a subcontractor or supplier.
3. Acceptance will require substantial revision of Contract Documents.

G. Substitute products shall not be ordered without written acceptance of County and Architect.

H. County and Architect will determine acceptability of proposed substitutions and reserve right to reject proposals due to insufficient information.

1.4 CONTRACTOR'S REPRESENTATION

A. Requests constitute a representation that Contractor:
1. Has investigated proposed product and determined it meets or exceeds, in all respects, specified product.
2. Will provide same warranty or longer warranty for substitution as for specified product.
3. Will coordinate installation and make other changes that may be required for Work to be complete in all respects.
4. Waives claims for additional costs or time that subsequently become apparent.
5. Will pay costs of changes to Contract Documents, Drawings, details and Specifications required by accepted substitutions.

1.5 ARCHITECT'S DUTIES

A. Review Contractor's requests for substitutions with reasonable promptness.
1. Architect will recommend that County accept or reject substitution request.
2. Architect/Engineer will provide estimate of cost to be borne by Contractor for changes to Contract Documents, Drawings, details and Specifications that are required by substitutions. Written acceptance of charges by Contractor is required prior to any cost being incurred by the Architect/Engineer.

B. Notify Contractor in writing of decision to accept or reject requested substitution.

PART 2 PRODUCTS
Not Used

PART 3 EXECUTION
Not Used

END OF SECTION

Project _____

NMR Project No. _____ Substitution Request No. _____

Submittal No. _____ Date _____

To:
Nichols, Melburg & Rossetto Architects
300 Knollcrest Drive
Redding, CA 96002

From:
_____
_____
_____
_____

1	Specification Section of Item:		
2	Specified Item (*Attach Product Data as required by Section 01 33 00.):*		
3	Proposed Substitution (*Attach Product Data as required by Section 01 60 00 and 01 62 00.):*		
4	Itemized quality and performance comparison of proposed substitution with specified product. Indicate variations and appropriate specification section references. Attach summary.		
5	Reasons for submitting the Substitution:		
6	Does substitution affect dimensions shown on Drawings? *If yes, clearly indicate changes.*	Yes No	
7	What effect does the substitution have on other trades or products?		
8	What effect does the substitution have on the construction schedule?		
9	What effect does the substitution have on project cost?		
10	What effect does the substitution have on maintenance services and replacement materials?		

11	Provide any other information on changes to Drawings and Specifications that proposed substitution will require for its proper installation.		
12	Do the guarantee and warranty provided with the proposed substitution equal or exceed those of the specified product?	Yes No	

The undersigned agrees to pay for changes to the building design, including Architectural, Engineering, Agency Approval and Detailing costs caused by the requested substitution.

The undersigned states that the performance, function, appearance and quality of the proposed substitution are equivalent or superior to the specified item.

Submitted by _____
Signature

_____
Company Name

DESIGN CONSULTANT REVIEW					
☐	No Exception Taken	☐	Revise and Resubmit	☐	Rejected
☐	Submit Specified Item	☐	Furnish as Corrected	☐	See Summary Sheet Item
☐	Rejected, Request submitted after the specified 20-day Substitution Review period.				
☐	Rejected, Request and data are incomplete for review.				

By _____ Date _____

END OF SECTION

SECTION 01 70 00

EXECUTION REQUIREMENTS

PART 1 GENERAL

1.1 SUMMARY

A. This section describes execution requirements.
   1. Installer qualifications.
   2. Examination.
   3. Manufacturer’s instructions.
   4. Installation.
   5. Protection.

1.2 INSTALLER QUALIFICATIONS

A. Experienced Installers: Unless noted otherwise by a particular specification Section, installers shall have minimum of five years successful experience installing items similar to those required for Project, except for individuals in training under direct supervision of experienced installer.

1.3 EXAMINATION

A. Acceptance of Conditions: Beginning installation of a product signifies installer has examined substrates, areas, and conditions for compliance with manufacturer requirements for tolerances and other conditions affecting performance.

B. Field Measurements: Take field measurements as required to fit Work properly; recheck measurements prior to installing each product.
   1. Where portions of Work are to fit to other construction verify dimensions of other construction by field measurements before fabrication; allow for cutting and patching in order to avoid delaying Work.

C. Space Requirements: Verify space requirements and dimensions of items shown diagrammatically on Drawings.

1.4 MANUFACTURERS' INSTRUCTIONS

A. Manufacturer’s Recommendations: When work is specified to comply with manufacturers' recommendations or instructions, distribute copies to persons involved and maintain one set in field office.

B. Perform work in accordance with details of recommendations and instructions and specified requirements.
   1. Should a conflict exist between Specifications and recommendations or instructions consult with Architect.

C. Where manufacturer's information notes special recommendations in addition to installation instructions, comply with both recommendations and instructions.

1.5 INSTALLATION

A. Pre-Installation Meetings: Installers and suppliers are to attend pre-installation meetings scheduled by Contractor.

B. Comply with manufacturers written recommendations and installation instructions unless more restrictive requirements are specified.

C. Locate Work and components accurately, in correct alignment and elevation.
   1. Make vertical work plumb and horizontal work level.
   2. Install components to allow space for maintenance and ease of removal for replacement.

D. Install products at time and under conditions to ensure best possible results; maintain conditions required for product performance until Substantial Completion.

E. Conduct operations so no part of Work is subject to damaging operations or loading in excess of that expected during normal conditions.

F. Securely anchor permanent construction in place, accurately located and aligned with other portions of Work.

G. Allow for building movement including thermal expansion and contraction.

H. Make joints of uniform width; arrange joints as indicated, for best visual effect where not otherwise indicated; fit exposed connections together to form hairline joints except where otherwise indicated.

1.6 PROTECTION

A. Protect products subject to deterioration with impervious cover. Provide ventilation to avoid condensation and trapping water.

B. Take care to use protective covering and blocking materials that do not soil, stain, or damage materials being protected.

C. After installation, provide coverings to protect products from damage from traffic and construction operations, remove when no longer needed.

D. Protect interior materials from water damage; immediately remove wet materials from site to prevent growth of mold and mildew on site.

PART 2 PRODUCTS
Not Used.

PART 3 EXECUTION
Not Used.

END OF SECTION

SECTION 01 73 29

CUTTING AND PATCHING

PART 1 GENERAL

1.1 SUMMARY

A. Contractor shall be responsible for cutting, fitting and patching required to complete Work and to:
   1. Make its parts fit together properly.
   2. Uncover work to provide for installation of ill-timed work.
   3. Remove and replace defective work.
   4. Remove and replace work not conforming to Contract Documents.
   5. Remove samples of installed work as required for testing.
   6. Provide routine penetrations of non-structural surfaces for installation of piping and electrical conduit.

1.2 REQUESTS FOR INFORMATION

A. Submit a written request to Architect well in advance of executing cutting or alteration which affects:
   1. Work of County or separate contractor.
   2. Structural value or integrity of any element of Project.
   3. Integrity of weather-exposed or moisture-resistant elements.
   4. Efficiency, operational life, maintenance or safety of operational elements.
   5. Visual qualities of sight-exposed elements.

B. Requests shall include:
   1. Identification of Project and description of affected work.
   2. Necessity for cutting or alteration.
   3. Effect on work of County or separate contractor.
   4. Effect on structural integrity, or weatherproof integrity of Project.
   5. Alternatives to cutting and patching.
   6. Cost proposal, when applicable.
   7. Written permission of separate contractor whose work will be affected.
   8. Description of proposed work including:
      a. Scope of cutting, patching, alteration, or excavation.
      b. Products proposed to be used.
      c. Extent of refinishing to be included.

PART 2 PRODUCTS

2.1 MATERIALS

A. Comply with Specifications and standards for each specific product involved.

B. Where Specifications and standards have not been provided, provide materials and fabrication consistent with quality of Project and intended for commercial construction.

C. Provide new materials for cutting and patching unless otherwise indicated.

PART 3 EXECUTION

3.1 INSPECTION

A. Inspect existing conditions of Project, including elements subject to damage or to movement during cutting and patching.

B. After uncovering work, inspect conditions affecting installation of products, or performance of work.

C. Report unsatisfactory or questionable conditions to Architect in writing; do not proceed with work until Architect has provided further instructions.

3.2 PREPARATION

A. Provide adequate temporary support as necessary to assure structural value or integrity of affected portion of Work.
   1. Provide services of licensed engineer for designing temporary support where required by applicable authorities for temporary supports and for shoring; submit engineering calculations directly to applicable authorities upon request.

B. Protect other portions of Project from damage.

3.3 PERFORMANCE

A. Execute cutting by methods that provide proper surfaces to receive installation of repairs and finishes.
   1. Execute excavating and backfilling by methods which will prevent settlement and which will prevent damage to other work.

B. Employ same installer or fabricator to perform cutting and patching work as employed for new construction for:
   1. Weather-exposed or moisture resistant elements.
   2. Sight-exposed finished surfaces.

C. Execute fitting and adjustment of products to provide a finished installation to comply with specified products, functions, tolerances and finishes.

D. Restore work that has been cut or removed; install new products to provide completed Work in accordance with requirements of Contract Documents.

E. Fit work tight to pipes, sleeves, ducts, conduit and penetrations through surfaces.

F. Refinish entire surfaces as necessary to provide even finish to match adjacent finishes:
   1. For continuous surfaces, refinish to nearest intersection.
   2. For an assembly, refinish entire unit.

END OF SECTION

SECTION 01 74 00

CLEANING

PART 1 GENERAL

1.1 SUMMARY

A. This Section includes requirements for Progress Cleaning during progress of the Work and Final Cleaning at completion of the Work.

1.2 GENERAL CLEANING

A. Conduct cleaning and waste-removal operations to comply with local laws and ordinances, Federal and local environmental and antipollution regulations.

B. Employ experienced workers or professional cleaners for final cleaning. Clean each surface or unit to condition expected in an average commercial building cleaning and maintenance program.

C. Comply with manufacturer's written instructions.

PART 2 PRODUCTS

2.1 MATERIALS

A. Use only those cleaning materials which will not create hazards to health or property, and which will not damage surfaces.

B. Use only those cleaning materials and methods recommended by manufacturer of the surface material to be cleaned.

C. Use cleaning materials only on surfaces recommended by cleaning material manufacturer.

2.2 EQUIPMENT

A. Provide covered containers for deposit of waste materials, debris, and rubbish.

B. Locate trucks for deposit of waste materials, debris, and rubbish as directed by County.

C. Vacuuming Equipment: Type with high efficiency particulate arrestor (HEPA) type filters; properly maintained

PART 3 EXECUTION

3.1 DUST CONTROL

A. Establish and enforce strict cleaning and dust control procedures before, during, and after installation of health care equipment, as approved by County and Architect. This requirement is critical to successful completion of the Work.

B. Clean interior spaces prior to the start of finish painting and continue cleaning on as-needed basis until painting is finished. Schedule operations so that dust and other contaminants resulting from cleaning process will not fall on wet or newly coated surfaces.

3.2 PROGRESS CLEANING

A. Concealed Spaces: Remove debris from concealed spaces before enclosing the space.

B. Execute daily cleaning as required to keep the Work free from accumulations of waste materials, rubbish, and debris.

C. Maintain site premises in a clean and orderly condition, utilizing on-site containers for the collection of waste materials and debris.

D. Remove debris and rubbish from pipe chases, plenums, attics, crawl spaces, base track and other closed or remote spaces, prior to closing the space.

E. Remove waste materials from the site periodically and dispose of at legal disposal areas away from the site.

3.3 SUBSTANTIAL COMPLETION

A. Complete Final Cleaning before requesting inspection for Certification of Substantial Completion for entire Project or for a portion of a Project.

B. Prior to final completion, or County occupancy, Contractor shall conduct an inspection of sight-exposed interior surfaces in all construction areas, to verify that the entire Work is clean

3.4 FINAL CLEANING

A. Clean Project site, yard, and grounds, in areas disturbed by construction activities, including landscape development areas, of rubbish, waste material, litter, and other foreign substances.

B. Sweep paved areas broom clean. Remove petrochemical spills, stains, and other foreign deposits.

C. Clean exposed exterior and interior hard-surfaced finishes to a dirt-free condition, free of stains, films, and similar foreign substances. Avoid disturbing natural weathering of exterior surfaces. Restore reflective surfaces to their original condition.

D. Remove grease, mastic, adhesives, dust, dirt, stains, fingerprints, labels, and other foreign materials from sight-exposed interior surfaces

E. Remove debris and surface dust from limited access spaces, including roofs, plenums, shafts, trenches, equipment vaults, manholes, attics, and similar spaces.

F. Sweep concrete floors broom clean in unoccupied spaces.

G. Vacuum carpet and similar soft surfaces, removing debris and excess nap; shampoo if visible soil or stains remain.

H. Clean transparent materials, including mirrors and glass in doors and windows. Remove glazing compounds and other noticeable, vision-obscuring materials. Replace chipped or broken glass and other damaged transparent materials. Polish mirrors and glass, taking care

not to scratch surfaces.

I. Polish glossy surfaces to a clear shine.

J. Remove labels that are not permanent.

K. Touch up and otherwise repair and restore marred, exposed finishes and surfaces. Replace finishes and surfaces that cannot be satisfactorily repaired or restored or that already show evidence of repair or restoration.

L. Do not paint over "UL" and similar labels, including mechanical and electrical nameplates.

M. Wipe surfaces of mechanical and electrical equipment, and similar equipment. Remove excess lubrication, paint and mortar droppings, and other foreign substances.

N. Clean plumbing fixtures to a sanitary condition, free of stains, including stains resulting from water exposure. Wash and shine glazing and mirrors.

O. Replace disposable air filters and clean permanent air filters. Clean exposed surfaces of diffusers, registers, and grills.

P. Clean light fixtures, lamps, globes, and reflectors to function with full efficiency. Replace burned-out bulbs, and those noticeably dimmed by hours of use, and defective and noisy starters in fluorescent and mercury vapor fixtures to comply with requirements for new fixtures.

Q. Ventilating Systems:
   1. Clean permanent filters and replace disposable filters if units were operated during construction.
   2. Clean ducts, blowers, and coils if units were operated without filters during construction.

END OF SECTION

SECTION 01 75 00

STARTING AND ADJUSTING

PART 1 GENERAL

1.1 SUMMARY

A. Starting systems.

B. Testing, adjusting, and balancing.

1.2 STARTING SYSTEMS

A. Coordinate schedule for start-up of various equipment and systems.

B. Notify Architect and County seven days prior to start-up of each item.

C. Verify that each piece of equipment or system has been checked for proper lubrication, drive rotation, belt tension, control sequence, or other conditions that may cause damage.

D. Verify that tests, meter readings, and specified electrical characteristics agree with those required by the equipment or system manufacturer.

E. Verify wiring and support components for equipment are complete and tested.

F. Execute start-up under supervision of responsible Contractors' personnel in accordance with manufacturers' instructions.

G. When specified in individual specification Sections, require manufacturer to provide installation prior to start-up, and to supervise placing equipment or system in operation.

H. Submit a written report that equipment or system has been properly installed and is functioning correctly.

1.3 TESTING, ADJUSTING, AND BALANCING

A. Contractor shall employ services of an independent firm to perform testing, adjusting and balancing. Contractor shall pay for services.

B. The independent firm will perform services specified in Electrical and Mechanical sections.

C. Reports will be submitted by the independent firm to the County indicating observations and results of tests and indicating compliance or non-compliance with specified requirements and with the requirements of the Contract Documents.

PART 2 PRODUCTS

Not Used

PART 3 EXECUTION

Not Used

END OF SECTION

SECTION 01 76 00

PROTECTING INSTALLED CONSTRUCTION

PART 1 GENERAL

1.1 SUMMARY

A. Protection for products, including Owner-provided products, after installation.

1.2 PROTECTION AFTER INSTALLATION

A. Protect installed products and control traffic in immediate area to prevent damage from subsequent operations.

B. Provide protective covers at walls, projections, corners, jambs, sills and soffits in and adjacent to traffic areas.

C. Protect finished floors and stairs from dirt, wear and damage:
1. Secure heavy sheet goods or similar protective materials in place, in areas subject to foot traffic.
2. Lay planking or similar rigid materials in place, in areas subject to movement of heavy objects.
3. Lay planking or similar grid materials in place in areas where storage of products will occur.
4. Distribute loads of heavy stockpile materials, such as gypsum wall board, to prevent floor loading conditions in excess of loading capacity.

D. Protect waterproofed and roofed surfaces:
1. Restrict use of surfaces for traffic of any kind, and for storage of products.
2. When an activity is mandatory, obtain recommendations for protection of surfaces from installer or manufacturer. Install protection and remove on completion of activity. Restrict use of adjacent unprotected areas.

E. Restrict traffic of any kind across planted lawn and landscape areas.

PART 2 PRODUCTS
Not Used

PART 3 EXECUTION
Not Used

END OF SECTION

SECTION 01 77 00

CLOSEOUT PROCEDURES

PART 1 GENERAL

1.1 SUMMARY

A. This section describes Contract closeout procedures.
   1. Substantial completion.
   2. Final completion.
   3. Project record documents.
   4. Material and finish data.
   5. Operation and maintenance data.
   6. Final Payment

1.2 SUBSTANTIAL COMPLETION

A. When Contractor considers the Work or a designated portion thereof is substantially complete, submit written notice, with list of items to be completed or corrected.
   1. List (“Punch List”): Format pre-approved by County; tabular form with each space listed required.

B. Within a reasonable time County will inspect status of completion and may add to “Punch List”.

C. Should County determine Work is not substantially complete, Contractor will be promptly notified in writing, giving reasons.

D. Contractor shall remedy deficiencies and send a second written notice of substantial completion; County will re-inspect Work.

E. When County determines Work is substantially complete, a letter of notification of Substantial Completion will be prepared.

1.3 FINAL COMPLETION

A. When Work is complete, submit written certification indicating:
   1. Work has been inspected for compliance with Contract Documents.
   2. Work has been completed in accordance with Contract Documents and deficiencies listed (in ‘Punch List”) with Certificate of Substantial Completion have been corrected.
   3. Equipment and systems have been tested in presence of County's representative and are operational.
   4. Work is complete and ready for final inspection.

B. Special Submittals: In addition to submittals required by Contract, submit following.
   1. Provide submittals required by governing authorities to governing authorities with copies included in Project Record Documents.
   2. Submit final statement of accounting giving total adjusted Contract Sum, previous payments, and sum remaining due.

1.4 PROJECT RECORD DOCUMENTS

A. Keep documents current; do not permanently conceal any work until required information has been recorded.
   1. Contractor to maintain a separate set of Drawings for Project Record Documents.
   2. Store reproducible Drawings, one set of Project Manual, and one copy of each Change Order separate from documents used for construction, for use as Project Record Documents.
   3. Indicate actual work on Drawings; indicate actual products used in Project Manual, including manufacturer, model number and options.
   4. Update Project Record Documents daily and allow for Architect inspection at least once a month.

B. At Contract close-out submit documents with transmittal letter containing date, Project title, Contractor's name and address, list of documents, and signature of Contractor.

1.5 MATERIAL AND FINISH DATA

A. Provide data for primary materials and finishes.

B. Submit two sets prior to final inspection, bound in 8-1/2" by 11" three-ring binders with durable plastic covers, clearly identified regarding extent of contents.
   1. Electronic Format: Where available in electronic format, submit electronic media with material and finish data.

C. Arrange by Specification division and give names, addresses, and telephone numbers of subcontractors and suppliers. List:
   1. Trade names, model or type numbers.
   2. Cleaning instructions.
   3. Product data.

1.6 OPERATION AND MAINTENANCE DATA

A. Provide data for:
   1. Electrically operated items.
   2. Mechanical equipment and controls.
   3. Electrical equipment and controls.

B. Submit one set prior to final inspection. One (1) set shall be bound in 8-1/2" x 11" three-ring binders with durable plastic covers, clearly identified regarding extent of contents.
   1. Provide a separate volume for each system, with a table of contents and index tabs for each volume.
   2. Arrange by Specification division and gives names, addresses, and telephone numbers of subcontractors and suppliers. List:
      a. Appropriate design criteria.
      b. List of equipment and parts lists.
      c. Operating and maintenance instructions.
      d. Shop drawings and product data.

C. Electronic Format: Submit One (1) flash drive or thumb drive, contents shall match the requirements of the bound submittal and be clearly organized and labeled.

1.7 FINAL PAYMENT

A. When, in the opinion of the architect, the project is complete (after all punch list items are complete as described in Item 1.2 Substantial Completion), the Architect will advise the County and the County will file the Notice of Completion with the County.

B. Should there be items not available due to delays in delivery, or should work remain incomplete, the County may require the Contractor to post a certified check in an agreed upon amount sufficient to cover such incomplete or uncorrected items. Such certified check shall be held until completion of all incomplete Work.

C. The retention shall be held by the County until forty (40) days after the date of recording of the Notice of Completion. If no stop notices or encumbrances are filed and if all work is complete, the retention shall be paid the contractor. Assessed liquidated damages and extra services provided by the architect and inspector due to additional inspections of incomplete work shall be deducted from the retention.

D. Final payment to the contractor will not be made until all requirements have been met and all documents set forth herein have been received, including but not limited to: Record Drawings, Warranties, Operation and Maintenance Manuals, Demonstration/Training and extra stock.

PART 2 PRODUCTS
Not Used

PART 3 EXECUTION
Not Used

END OF SECTION

SECTION 01 78 36

WARRANTIES

PART 1 GENERAL

1.1 SUMMARY

A. Compile required and incidental warranties required by Contract Documents.

B. These warranties shall be in addition to and not a limitation of other rights the County may have against Contractor under Contract Documents and which may be prescribed by law, regardless of wording of warranty.

1.2 FORM OF SUBMITTAL

A. Provide duplicate copies, notarized or on Contractor and Manufacturer's letterhead.
   1. Assemble documents executed by subcontractors, installers, suppliers, and manufacturers.
   2. Provide table of contents and assemble in binder with durable plastic cover, clearly identified regarding extent of contents.
   3. Electronic Format: Submit warranties on electronic media in PDF format.

B. Warranty Form: Use form acceptable to County; completed form shall not detract from or confuse interpretations of Contract Documents.
   1. General Contractor shall sign warranty.
   2. Subcontractor and installer shall sign warranty where specified.
      a. Provide required manufacturer’s warranties for waterproofing and roofing systems countersigned by subcontractor and installer.

C. Submit final warranties prior to final application for payment.
   1. For equipment put into use with County's permission during construction, submit within ten days after first operation.
   2. For items of Work delayed materially beyond Date of Substantial Completion, provide updated submittal within ten days after acceptance, listing date of acceptance as start of warranty period.

D. Provide information for County's personnel regarding proper procedure in case of failure and instances that might affect validity of warranty.

E. Size: 8-1/2" by 11" for three-ring binder; fold larger sheets to fit.

1.3 WARRANTIES

A. Warranties are intended to protect the County against failure of work and against deficient, defective and faulty materials and workmanship, regardless of sources.

B. Limitations: Warranties are not intended to cover failures that result from:
   1. Unusual or abnormal phenomena of the elements.
   2. County's misuse, maltreatment or improper maintenance of work.
   3. Vandalism after substantial completion.
   4. Insurrection or acts of aggression including war.

C. Related Damages and Losses: Remove and replace work which is damaged as result of failure, or which must be removed and replaced to provide access for correction of warranted work.

D. Warranty Reinstatement: After correction of warranted work, reinstate warranty for corrected work to date of original warranty expiration, but not less than half original warranty period.

E. Replacement Cost: Replace or restore failing warranted items without regard to anticipated useful service lives.

F. Rejection of Warranties: County reserves right to reject unsolicited and coincidental product warranties that detract from or confuse interpretations of Contract Documents.

PART 2 PRODUCTS
Not Used

PART 3 EXECUTION
Not Used

END OF SECTION

(SUBMIT IN DUPLICATE)

PROJECT	
LOCATION	
WARRANTY FOR	

We hereby warrant that the _____

work which we have installed in the above project for a period of _____ year(s) in accordance with the warranty period required in the specifications.

We agree to repair or replace any or all such work, together with any other work which may be displaced in so doing that may prove defective in workmanship or materials, within the period of _____ year(s) from date of filing of the **Notice of Completion**, without expense whatsoever to the Owner, ordinary wear and tear and unusual abuse or neglect excepted.

In the event of our failure to comply with the above-mentioned conditions within fifteen (15) days after being notified in writing, we collectively or separately do hereby authorize said Owner to proceed to have the defects repaired and made good at our expense and will pay the costs and charges therefrom immediately upon demand. We also agree to pay all costs related to litigation if we do not pay the costs you demand.

DATE: _____

SUBCONRACTOR'S SIGNATURE: _____

CONTRACTOR'S SIGNATURE: _____

END OF SECTION

SECTION 01 79 00

DEMONSTRATING AND TRAINING

PART 1 GENERAL

1.1 SUMMARY

A. Section Includes:
1. Provide equipment and systems demonstration and instruction in accordance with Contract Documents.
2. Video-record seminars and system demonstrations.

1.2 DESCRIPTION

A. Seminar Agenda and Outline:
1. Prepare a seminar agenda and outline in consultation and cooperation with Owner. Include following:
   a. Equipment and systems that will be included in seminars.
   b. Name of companies and representatives presenting at seminars.
   c. Outline of each seminar's content.
   d. Time and date allocated to each system and item of equipment.
2. Submit preliminary seminar agenda and outline for review and comment by Owner two months before date of completion.

B. Seminar Organization:
1. Qualified Contractor or Sub-contractor personnel familiar with design, operation, maintenance and troubleshooting of equipment and systems shall lead seminars.
2. Coordinate individual presentations and ensure manufacturer’s representatives scheduled to be at training seminars are present.
3. Coordinate proposed seminar dates with Owner and select mutually agreeable dates.
4. Video-recording: Arrange for recording of training seminars and system demonstrations, including seminar and demonstration questions and answers.

C. Seminar Content:
1. Contractor or manufacturer’s representative will explain design philosophy of primary systems.
2. Include following information in presentations dealing with specific systems.
   a. An overview of how system is intended to operate.
   b. Describe design parameters, constrains and operational requirements.
   c. Describe system operation strategies.
   d. Provide information to help in identifying and troubleshooting problems.
   e. Recommended preventative and routine maintenance.

D. System Demonstration:
1. Demonstrate operation of equipment and systems when specified in individual technical sections. Include following in demonstration.
   a. Start-up and shut down.
   b. Operation.
   c. Scheduled and preventative maintenance.
   d. Troubleshooting.
2. Demonstration may be conducted at time of original starting with Owner's prior approval.

3. Be prepared to answer questions raised by Owner's personnel at demonstrations and seminars.
4. Use manufacturer's operation and maintenance data as basis of instruction.

1.3 SUBMITTALS

A. Video-records: Submit two copies; include label on each video disc and on each container identifying Project and Seminar content.

PART 2 PRODUCTS

Not Used

PART 3 EXECUTION

Not Used

END OF SECTION

SECTION 02 41 13

SELECTIVE SITE DEMOLITION

PART 1 GENERAL

1.1 SUMMARY

A. Section Includes:
1. Demolition and removal of selected portions of the site and features as described in the Drawings.
2. Clear site of plant life and grass except trees noted "Save".
3. Remove root system of trees and shrubs.
4. Remove asphalt and concrete paving and surface debris as designated and as required for completion of sitework as indicated.
5. Repair procedures for selective demolition operations.

1.2 DEFINITIONS:

A. Remove: Detach items from existing construction and legally dispose of them.

B. Remove and Salvage: Detach items from existing construction and deliver them to Owner ready for reuse.

C. Remove and Reinstall: Detach items from existing construction, prepare them for reuse, and reinstall them where indicated.

D. Existing to Remain: Existing items of construction that are not to be removed.

1.3 MATERIALS OWNERSHIP

A. Except for items or materials indicated to be salvaged, reinstalled or otherwise indicated to remain the Owner's property, demolished materials shall become the Contractor's property and shall be removed from the site with further disposition at Contractor's option.

1.4 SUBMITTALS

A. Proposed dust-control measures.

B. Proposed noise-control measures.

C. Schedule of Selective Demolition Activities.

1.5 QUALITY ASSURANCE

A. Regulatory Requirements: Comply with governing EPA notification regulations before starting selective demolition. Comply with hauling and disposal regulations of authorities having jurisdiction.

B. Pre-Demolition Conference: Conduct conference at Project site. Review methods and procedures related to selective demolition.

1.6 PROJECT CONDITIONS

A. On-site storage or sale of removed items or materials will not be permitted.

B. Utility Service: Maintain existing utilities indicated to remain in service and protect them against damage during selective demolition operations.

C. Fire Protection: Maintain fire-protection services during selective demolition operations.

D. Dust Control: Provide adequate dust control during selective demolition operations.

PART 2 PRODUCTS

2.1 REPAIR MATERIALS

A. Where available and appropriate for use, provide repair materials that are identical to existing materials.

B. Where identical materials are unavailable or cannot be used for exposed surfaces, use materials that visually match existing adjacent surfaces to the fullest extent possible.

C. Use materials whose installed performance equals or surpasses that of existing materials.

PART 3 EXECUTION

3.1 PREPARATION

A. Notify U.S.A. (Underground Service Alert) prior to construction.

B. Upon discovery of unknown utility or concealed conditions, discontinue affected work; notify Architect/Engineer. Verify that utilities to be removed have been disconnected and capped.

C. Survey existing conditions and correlate with requirements indicated to determine extent of selective demolition required.

D. When encountering unanticipated mechanical, electrical or structural elements that conflict with the intended function or design, investigate and measure the nature and extent of the conflict. Promptly submit a written report to the Architect.

E. Survey the condition of the building to determine whether removing any element might result in a structural deficiency or unplanned collapse of any portion of the structure or adjacent structures during selective demolition.

F. Temporary Site Control: Remove debris and conduct demolition operations in a manner to ensure minimum interference with roads, streets, walks, walkways, corridors, and other adjacent occupied or used facilities.

G. Perform surveys as the selective demolition progresses to detect hazards resulting from the activities.

H. Dangerous Materials: Drain, purge or otherwise remove, collect and dispose of chemicals, gases, explosives, acids, flammables or other dangerous materials before proceeding with selective demolition operations.

I. Exercise all possible precautions to keep noise to a minimum. Selection and disposition of power equipment shall be made with consideration of the least possible interference due airborne noise.

J. Do not close or obstruct streets, walks, walkways or other adjacent occupied or used facilities without permission from the Architect and authorities having jurisdiction.

K. Provide alternate routes around closed or obstructed traffic ways if required by governing regulations.

L. Temporary Facilities: Conduct demolition operations in a manner to prevent injury to people and damage to adjacent building and facilities to remain.
   1. Provide for safe passage of people around selective demolition area.
   2. Erect temporary protection, such as walks, fences, and railings, where required by authorities having jurisdiction.

M. Protect existing site improvements, appurtenances and landscaping to remain.

N. Provide temporary weather protection, during interval between demolition and removal of existing construction, on exterior surfaces and new construction to prevent water leakage or damage to structure or interior areas.

O. Protect walls and other existing finish work that are to remain and are exposed during selective site demolition operations.

P. Cover and protect site furnishings and equipment that have not been removed.

3.2 CLEARING

A. Clear areas required for access to site and execution of Work.
   1. Topsoil: Excavated material, graded free of roots, rocks larger than one inch, subsoil, debris, and large weeds.
   2. Subsoil: Excavated material, graded free of lumps larger than 6 inches, rocks larger than 3 inches and debris.

B. Excavate topsoil entire site and remove excess topsoil not being reused from site.
   1. Do not excavate wet topsoil.
   2. Stockpile topsoil to depth not exceeding 4 feet.

C. Patch and repair areas damaged by demolition or installation of new improvements.

D. Cap all electrical, water, sewer and signal lines, exposed by site clearing.

E. Top Surface of Subgrade: Plus or minus one inch.

3.3 PROTECTION

A. Protect plant growth and existing improvements remaining as final landscaping.

B. Protect bench marks and existing work from damage or displacement.

C. Maintain designated site access for vehicle and pedestrian traffic.

D. Protect any and all existing utilities, pipes, conduits, vaults, manholes, cleanouts, boxes, and similar such structures not indicated to be removed or demolished from damage during

demolition and construction.

3.4 UTILITY SERVICES

A. Notify Owner's Representative five (5) days in advance of disconnecting utility services which will permanently or temporarily disrupt normal school operations.

B. Existing Utilities: Maintain services indicated to remain and protect them against damage during selective demolition operations.

C. Do not interrupt existing utilities serving occupied or operating facilities, except when authorized in writing by the Owner.

D. Provide temporary services during interruptions to existing utilities, as acceptable to the Owner.

E. Utility Requirements: Locate, identify, disconnect, and seal or cap off indicated utility services serving areas to be selectively demolished.

F. Owner will arrange to shut off indicated utilities when requested by Contractor.

G. Where utility services are required to be removed, relocated or abandoned, provide bypass connections to maintain continuity of service to other parts of the building before proceeding with selective demolition.

H. Cut off pipe or conduit in walls or partitions to be removed. Cap, valve or plug and seal the remaining portion of pipe or conduit after bypassing.

I. Do not start selective demolition work until utility disconnection and sealing have been completed and verified.

3.5 POLLUTION CONTROLS

A. Disposal: Remove and transport debris in a manner that will prevent spillage on adjacent surfaces and areas.

B. Cleaning: Clean adjacent structures and site improvements of dust, dirt and debris caused by selective demolition operations. Return adjacent areas to condition existing before start of selective demolition.

3.6 SELECTIVE DEMOLITION

A. Demolish and remove existing construction only to the extent required by new construction and as indicated. Use methods required to complete selective demolition within limitations of governing regulations and as follows:
   1. Proceed with selective demolition systematically. Conduct work in an order that avoids transporting removed items and debris through areas with completed selective demolition work, and that allows for removal of items before supports for those items are removed in another area.
   2. Neatly cut openings and holes plumb, square, and true to dimensions required. Use cutting methods least likely to damage adjoining construction to remain. Use hand or small power tools designed for sawing or grinding, not for hammering and chopping, to minimize disturbance of adjacent surfaces. Temporarily cover openings to remain.
   3. Cut or drill from the exposed or finished side into concealed surfaces to avoid marring existing finished surfaces.

4. Do not use cutting torches until work area is cleared of flammable materials. At concealed spaces, such as duct and pipe interiors, verify condition and contents of hidden space before starting flame-cutting operations. Maintain portable fire-suppression devices during flame-cutting operations, and maintain adequate ventilation when using cutting torches.
5. Lower removed structural framing members to ground by method suitable to avoid free fall and to prevent ground impact or dust generation.
6. Locate selective demolition equipment throughout the structure and remove debris and materials so as not to impose excessive loads on supporting walls, floors or framing.
7. Return elements of construction and surfaces to remain to condition existing before start of selective demolition operations.

B. Repair and Storage of Salvaged Items and Items to be Reinstalled:
1. Repair: Clean and repair the materials and equipment to functional condition adequate for intended reuse. Paint damaged or deteriorated painted surfaces of equipment to match new equipment.
2. Storage: Store the materials and equipment in a secure area until final disposal.

C. Disposal of Salvaged Items and Items to be Reinstalled:
1. Reinstallation: Where items are indicated to be removed and reinstalled, install the materials and equipment in locations indicated. Comply with installation requirements for new materials and equipment.
2. Delivery to Owner: Where items are indicated to be removed and salvaged, transport the materials and equipment to the area on-site designated by the Architect or indicated on the Drawings.

D. Protection of Salvaged Items: Pack or crate salvaged materials and equipment after removal. Identify contents of containers. Protect items from damage during transport and storage.

E. Existing Items to Remain: Protect construction indicated to remain against damage and soiling during selective demolition. When permitted by the Architect, items may be removed to a suitable, protected storage location during selective demolition and then cleaned and reinstalled in their original locations.

3.7 PATCHING AND REPAIRS

A. Promptly patch and repair holes and damaged surfaces caused to adjacent construction by selective demolition operations.

B. Repairs: Where repairs to existing surfaces are required, patch to produce surfaces suitable for new materials.
1. Completely fill holes and depressions in existing masonry walls to remain with an approved masonry patching material, applied according to the manufacturer's written recommendations.

C. Finishes: Restore exposed finishes of patched areas and extend finish restoration into adjoining construction to remain in a manner that eliminates evidence of patching and refinishing.

D. Wall Surfaces: Patch and repair wall surfaces where demolished walls or partitions result in extending one finished area into another. Provide a flush and even surface of uniform color and appearance.
1. Closely match texture and finish of existing adjacent surface.
2. Patch with durable seams that are as invisible as possible. Comply with specified

tolerances.

3. Where patching smooth painted surfaces, extend final paint coat over entire unbroken surface containing the patch after the patched surface has received primer and other specified undercoats.
4. Remove existing wall materials and replace with new materials, if necessary to achieve uniform color and appearance.
5. Where feasible, inspect and test patched areas to demonstrate integrity of the installation.

3.8 DISPOSAL OF DEMOLISHED MATERIALS

A. Promptly dispose of demolished materials. Do not allow demolished materials to accumulate on-site.

B. Do not burn demolished materials.

C. Disposal: Transport demolished materials off Owner property and legally dispose of them.

3.9 CLEANING

A. Clean adjacent structures and improvements of dust, dirt, and debris caused by clearing.

B. Return adjacent areas to condition existing before clearing began.

C. Leave site in a clean condition.

END OF SECTION

SECTION 02 41 14

DEMOLITION FOR REMODELING

PART 1 GENERAL

1.1 WORK INCLUDED

A. Saw-cut and remove portions of existing structure as designated.

B. Remove designated building furnishings equipment and fixtures.

C. Remove designated partitions, surface finishes and related components.

D. Remove designated ceiling finishes and related components.

E. Remove and cap and identify utilities.

F. Remove existing electrical system, complete.

G. Remove existing HVAC systems, complete.

H. Remove existing plumbing fixtures.

I. Remove existing windows.

J. Removal of existing asbestos bearing materials shall be performed by a licensed asbestos abatement contractor, and shall be under separate contract.

K. Protect existing building from weather damage.

L. Demolition of Hazardous Materials as identified below.

1.2 EXISTING CONDITIONS

A. Conduct demolition to minimize interference with adjacent building areas. Maintain protected egress and access at all times.

B. Provide, erect, and maintain temporary barriers and security devices.

PART 2 PRODUCTS

Not Used.

PART 3 EXECUTION

3.1 PREPARATION

A. Erect and maintain weatherproof closures for exterior openings and roof decks.

B. Protect existing items which are not indicated to be altered.

C. Disconnect, remove, and cap designated utility services within demolition areas.

D. Mark location of disconnected utilities. Identify and indicate capping locations on Project Record Documents.

3.2 HAZARDOUS MATERIALS

A. Regulatory Requirements
   1. The contractor and all subcontractors involved in this project shall have current knowledge of the United States Asbestos Hazard Emergency Response Act of 1987.
   2. The contractor and all subcontractors involved in this project shall have current knowledge of Title 8, California Code of Regulations, Section 1532.1 Construction Lead Standards.

B. Reports: Notify County immediately upon encountering any asbestos construction materials.

3.3 EXECUTION

A. Demolish in an orderly and careful manner. Protect existing supporting structural members, utility runs and landscaping. Assume existing components not specifically noted to be removed will remain. Protect to maintain original condition.

B. Except where noted otherwise, immediately remove demolished materials from site.

C. Remove materials to be re-installed or retained in manner to prevent damage.

D. Remove, store, and protect for re-installation materials and equipment hindering improvements.

E. Remove material and equipment to be retained by County with care to avoid unnecessary damage.

F. Remove and promptly dispose of contaminated, vermin infested, or dangerous materials encountered.

G. Report any encounter with asbestos bearing materials to the County immediately and stop work in the area.

H. Do not burn or bury materials on site.

I. Remove demolished materials from site as work progresses. Upon completion of work, leave areas of work in clean condition.

J. Repair areas to remain that are damaged by the Demolition.

END OF SECTION

SECTION 02 41 16

STRUCTURE DEMOLITION

PART 1 GENERAL

1.1 SUMMARY

A. This Section includes the following:
   1. Demolition and removal of buildings.
   2. Removing below-grade construction.
   3. Disconnecting, capping or sealing, and removing site utilities.

1.2 MATERIALS OWNERSHIP

A. Unless otherwise indicated, demolition waste becomes property of Contractor.

B. Refrigerant recovery will be completed separately by Owner prior to commencement of this demolition contract.

1.3 SUBMITTALS

A. Schedule of Building Demolition Activities: Indicate the following:
   1. Detailed sequence of demolition work, with starting and ending dates for each activity.
   2. Temporary interruption of utility services.
   3. Shutoff and capping of utility services.

B. Landfill Records: Indicate receipt and acceptance of any hazardous wastes by a landfill facility licensed to accept hazardous wastes.

1.4 QUALITY ASSURANCE

A. Regulatory Requirements: Comply with hauling and disposal regulations of authorities having jurisdiction.

B. Standards: Comply with ANSI A10.6 and NFPA 241.

1.5 PROJECT CONDITIONS

A. Buildings to be demolished will be vacated and their use discontinued before start of the Work.

B. Owner assumes no responsibility for buildings and structures to be demolished.
   1. Conditions existing at time of inspection for bidding purposes will be maintained by Owner as far as practical.

PART 2 PRODUCTS

2.1 REPAIR MATERIALS

A. Where available and appropriate for use, provide repair materials that are identical to existing materials.

B. Where identical materials are unavailable or cannot be used for exposed surfaces, use materials that visually match existing adjacent surfaces to the fullest extent possible.

C. Use materials whose installed performance equal or surpass that of existing materials.

PART 3 EXECUTION

3.1 EXAMINATION

A. Verify that utilities have been disconnected and capped before starting demolition operations.

B. Verify that hazardous materials have been remediated before proceeding with building demolition operations.

3.2 PREPARATION

A. Existing Utilities: Locate, identify, disconnect, and seal or cap off indicated utilities serving buildings and structures to be demolished.

1) Owner will arrange to shut off indicated utilities when requested by Contractor.
2) If removal, relocation, or abandonment of utility services will affect adjacent occupied buildings, then provide temporary utilities that bypass buildings and structures to be demolished and that maintain continuity of service to other buildings and structures.
3) Cut off pipe or conduit a minimum of 24 inches below grade. Cap, valve, or plug and seal remaining portion of pipe or conduit after bypassing according to requirements of authorities having jurisdiction.

B. Existing Utilities: Do not start demolition work until utility disconnecting and sealing have been completed and verified in writing.

C. Temporary Shoring: Provide and maintain interior and exterior shoring, bracing, or structural support to preserve stability and prevent unexpected movement or collapse of construction being demolished.

3.3 PROTECTION

A. Existing Facilities: Protect adjacent walkways, building entries, and other building facilities during demolition operations. Maintain exits from existing buildings.

B. Existing Utilities: Maintain utility services to remain and protect from damage during demolition operations.
1. Do not interrupt existing utilities serving adjacent occupied or operating facilities unless authorized in writing by Owner and authorities having jurisdiction.
2. Provide temporary services during interruptions to existing utilities, as acceptable to Owner and authorities having jurisdiction.
   a. Provide at least 72 hours' notice to occupants of affected buildings if shutdown of service is required during changeover.

C. Remove temporary barriers and protections where hazards no longer exist. Where open excavations or other hazardous conditions remain, leave temporary barriers and protections in place.

3.4 DEMOLITION, GENERAL

A. General: Demolish indicated existing buildings completely. Use methods required to complete the Work within limitations of governing regulations and as follows:
   1. Do not use cutting torches until work area is cleared of flammable materials. Maintain portable fire-suppression devices during flame-cutting operations.
   2. Maintain fire watch during and for at least two hours after flame cutting operations.
   3. Maintain adequate ventilation when using cutting torches.
   4. Locate building demolition equipment and remove debris and materials so as not to impose excessive loads on supporting walls or framing.

B. Site Access and Temporary Controls: Conduct building demolition and debris-removal operations to ensure minimum interference with roads, streets, walks, walkways, and other adjacent occupied and used facilities.
   1. Do not close or obstruct streets, walks, walkways, or other adjacent occupied or used facilities without permission from Owner and authorities having jurisdiction. Provide alternate routes around closed or obstructed traffic ways if required by authorities having jurisdiction.
   2. Use water mist and other suitable methods to limit spread of dust and dirt. Comply with governing environmental-protection regulations. Do not use water when it may damage adjacent construction or create hazardous or objectionable conditions, such as ice, flooding, and pollution.

C. Explosives: Use of explosives is not permitted.

3.5 DEMOLITION BY MECHANICAL MEANS

A. Proceed with demolition of structural framing members systematically, from higher to lower level. Complete building demolition operations above each floor or tier before disturbing supporting members on the next lower level.

B. Below-Grade Construction: Demolish foundation walls and other below-grade construction that are within footprint of new construction.
   1. Remove below-grade construction, including foundation walls, and footings, completely.

C. Existing Utilities: Demolish and remove existing utilities and below-grade utility structures.

3.6 SITE RESTORATION

A. Below-Grade Areas: Completely fill below-grade areas and voids resulting from building demolition operations with satisfactory soil materials.

B. Site Grading: Uniformly rough grade area of demolished construction to a smooth surface, free from irregular surface changes. Provide a smooth transition between adjacent existing grades and new grades.

3.7 REPAIRS

A. Promptly repair damage to adjacent buildings caused by demolition operations.

3.8 DISPOSAL OF DEMOLISHED MATERIALS

A. Remove demolition waste materials from Project site. See Division 01 Section "Construction Waste Management and Disposal" for recycling and disposal of demolition waste.

B. Remove demolition waste materials from Project site and legally dispose of them in an approved landfill acceptable to authorities having jurisdiction.
   1. Do not allow demolished materials to accumulate on-site.
   2. Remove and transport debris in a manner that will prevent spillage on adjacent surfaces and areas.

C. Do not burn demolished materials.

3.9 CLEANING

A. Clean adjacent structures and improvements of dust, dirt, and debris caused by building demolition operations. Return adjacent areas to condition existing before building demolition operations began.

END OF SECTION

SECTION 03 05 00

COMMON WORK RESULTS FOR CONCRETE

PART 1 GENERAL

1.1 DESCRIPTION

A. This section describes the requirements for common work related to concrete including, but not limited to bonding agents, chemical floor hardeners and cold and hot weather concreting.

1.2 RELATED WORK

A. Division 1 – General Requirements

B. Division 3 - Concrete

1.3 REFERENCES

A. ACI 301 – Specifications for Structural Concrete Buildings

B. CBC Chapter 19

C. ACI 318 – Building Code Requirements for Structural Concrete

D. ACI 305 – Hot Weather Concreting

E. ACI 306 – Cold Weather Concreting

1.4 SUBMITTALS

All submittals shall be submitted under the provisions of Division 1 - General Requirements.

A. Submittal No. 03 05 00A (#) – Product Data:
   1. Manufacturer's product data and specifications with application and installation instructions for proprietary materials and items, including admixtures, bonding agents, water stops, joint systems, chemical floor hardeners, and dry shake finish materials.

1.5 QUALITY ASSURANCE

A. Perform Work in accordance with ACI 301 and ACI 318 Chapter 4.

B. Obtain materials from the same source throughout the Work.

PART 2 PRODUCTS

2.1 MATERIALS

A. Bonding Agent:
   1. Bonding Materials: Polyvinyl acetate, rewettable type. Use in areas not subject to moisture.

2. Bonding Compound: Latex, non-rewettable type.
3. Bonding Admixture: Latex, non-wettable type.
4. Structural Bonding Epoxy Adhesive: Two-component, 100-percent solids, 100-percent reactive compound suitable for use on dry or damp surfaces.
5. Patching Compound: Free-flowing, polymer-modified cementitious coating.

B. Non-metallic Light Reflective Hardener:
1. Premixed, packaged dry shake, natural aggregate hardener with cleaned and finely graded silica aggregates, color pigments, and a high-strength cementitious binder. Apply to fresh concrete slabs where indicated on the Finish Schedule. Apply in accordance with the Hardener manufacturer's recommendations. The application shall be by mechanical spreader, except in areas where machine application is impossible. Seal and cure concrete in accordance with the Hardener manufacturer's recommendations. Cover or otherwise protect areas receiving hardener from spills, dirt, debris, and abrasions after installation. Color to be selected by Architect from the manufacturer's standard palette.

PART 3 EXECUTION

3.1 PREPARATION

A. Bonding: Roughen surface of set concrete at joints, except where bonding is obtained by use of concrete bonding agent, and clean surfaces of laitance, coatings, loose particles, and foreign matter.
1. Roughen surfaces to expose bonded aggregate uniformly; leave no laitance, loose particles of aggregate, or damaged concrete at the surface.
2. Bond fresh concrete to new concrete that has set but is not fully cured, as follows:
   a. At joints between footings and walls or columns, and between walls or columns and beams or slabs they support, and elsewhere unless otherwise specified. Dampen, but do not saturate, roughen, and clean the surface of the set concrete immediately before placing fresh concrete.
   b. At joints in exposed work, at vertical joints in walls, at joints in girders, beams, supported slabs, and other structural members, and at joints designed to contain liquids, apply a commercial bonding agent or neat cement grout to roughened and cleaned surface of set concrete.
      1) Apply a commercial bonding agent in accordance with the manufacturer's printed instructions.
      2) Apply neat cement grout, consisting of equal parts of portland cement and aggregate mixed with water to a consistency of thick cream, to the dampened concrete surfaces with a stiff brush to a minimum thickness of 1/16 inch. Deposit fresh concrete before the grout has attained its initial set.
3. Bond fresh concrete to fully cured hardened concrete or existing concrete. Before depositing fresh concrete, thoroughly roughen and clean hardened surfaces.
4. Bond curbs and equipment pads to base slabs with bonding agent in accordance with the manufacturer's directions.
5. Topping Slab: Prior to placement of metallic floor topping, the base slab shall be cleaned, dampened, and bonding compound or epoxy adhesive applied. Place topping mix after the rewettable bonding compound has dried or while the polymer bonding compound or epoxy adhesive is still tacky.

B. Cold Weather Placing: Protect concrete work from damage or reduced strength caused by frost, or low temperatures, in compliance with the requirements of ACI 306 and as specified.
1. When air temperature has fallen to or is expected to fall below 40 deg. F., uniformly heat water and aggregates before mixing to obtain a concrete placement temperature of not less than 50 deg. F. and not more than 80 deg. F.

2. Verify that forms, reinforcing steel, and adjacent concrete surfaces are free of frost before placing concrete.
3. Only the specified non-corrosive non-chloride accelerator shall be used. Calcium chloride, thiocyanates, or admixtures containing more than 0.05-percent chloride ions are not permitted.

C. Hot Weather Placing: When hot weather conditions exist that would impair the quality and strength of concrete, place it in compliance with ACI 305, and as specified.
1. Cool ingredients before mixing to maintain concrete placement temperature below 90 deg. F. Mixing water may be chilled, or chopped ice may be used provided water equivalent of ice is calculated to the total amount of mixing water.
2. Cover reinforcing steel with water-soaked burlap so that steel temperature will not exceed ambient air temperature immediately before embedment in concrete.
3. Fog spray forms, reinforcing steel and subgrade just prior to placing concrete.
4. Use water reducing retarding admixture when required by high temperatures, low humidity, or other adverse placing conditions.

D. In case of rain or inclement weather, freshly poured concrete shall be protected against infiltration of external water. Placing shall be terminated against nearest construction joint bulkhead and covered at once with tarpaulins or similar waterproof protection until concrete has set.

END OF SECTION

SECTION 03 11 00

CONCRETE FORMING

PART 1 GENERAL

1.1 DESCRIPTION

A. This Section describes the requirements for providing concrete formwork, shoring and reshoring for cast-in-place concrete, and installation of items furnished by others, including anchor bolts, setting plates, bearing plates, anchorages, inserts, frames, nosings, and other items to be embedded in concrete.

B. Related Sections:
1. Division 1 – General Requirements
2. Division 3 - Concrete

1.2 SUBMITTALS

All submittals shall be submitted under the provisions of Division 1 – General Requirements.

A. Submittal No. 03 11 00A – Product Data:
1. Manufacturer's product data and installation instructions for proprietary materials, including form liners and release agents, manufactured form systems, ties, and accessories.

B. Submittal No. 03 11 00B – Shop Drawings:
1. Show general construction of forms, including jointing, special formed joints or reveals, location and pattern of form tie placement, and other items affecting exposed concrete. Include details of inserts and anchorages.

C. Submittal No. 03 11 00C – Samples: Not required.

D. Submittal No. 03 11 0D – Record of Form Removal:
1. Keep an accurate record of the dates of form removal. Keep records available on the job at all times. Furnish one copy of these records to the Architect monthly as work progresses.

1.3 QUALITY ASSURANCE

A. Allowable Tolerances: Design, construct, set, and maintain the formwork to ensure completed work meets the suggested tolerance limits specified in ACI 347.

B. Placement:
1. Before placement, check the lines and levels of erected formwork. Make corrections and adjustments to ensure the proper size and location of concrete members and the stability of forming systems.
2. During placement, check formwork and related supports to ensure that forms are not displaced, and that completed work will be within specified tolerances.

PART 2 PRODUCTS

2.1 FORM MATERIALS

A. Forms for Exposed Finish Concrete: Plywood, metal, metal framed, plywood faced, or other panel-type materials provided as cast surfaces
   1. Furnish in the largest sizes to minimize the number of joints and conform to the joint system shown on drawings.
   2. Provide form material with sufficient thickness to withstand the pressure of placed concrete without bow or deflection beyond allowable tolerances.
   3. Plywood: APA grade B-B Plyform Class 1, not less than 5/8 inch thick; solid one side, sound undamaged sheets with straight edges.

B. Earth Forms: Unless otherwise indicated or required, concrete for footings may be placed directly against vertical excavated surfaces, provided the material will stand without caving, that minimum reinforcing steel clearances indicated are maintained, and suitable provisions are taken to prevent raveling of top edges or sloughing of loose material from walls of the excavation. Sides of excavation shall be made with a neat cut, and the width made as indicated. Concrete, which is exposed to view on the exterior, shall be formed to a minimum depth of 6 inches below the finished grade.

C. Lumber: Douglas Fir species; No. 1 or No. 2 grade with grade stamp clearly visible

D. Forms for Textured Finish Concrete: Special forming materials to produce surfaces with face design, arrangement, and configuration shown or required to meet Architect's control sample. Provide solid backing and form supports to ensure the stability of textured form liners.

E. Corrugated Steel Forms: Fabricate of galvanized steel sheets. Metal gauge not less than 20 gauge unless heavier gauge required, or as indicated.

F. Cylindrical Forms:
   1. Heavy glass fiber reinforced plastic or galvanized steel sheets.
   2. Butt sections together, with bolted or keyed joints.
   3. Finish interior joints of forms smooth, so there is no visible seam on finished concrete surfaces.

G. Form Ties: Factory fabricated, adjustable length cone type, removable or snap-off metal form ties, designed to prevent deflection and to prevent spalling concrete surfaces upon removal.
   1. Unless otherwise shown, provide ties so that portions remaining within the concrete after removal of exterior parts are 1 inch from the outer concrete surface.
   2. Unless otherwise indicated, provide form ties, which will leave a hole not larger than 1-inch diameter in the concrete surface.
   3. Form ties fabricated on the project site, and wire ties are not acceptable.

H. Form Release Agent: Commercial formulation release agent that will not bond with, stain, nor adversely affect concrete surfaces; will not impair subsequent treatment of concrete surfaces requiring bond or adhesion, nor impede wetting of surfaces to be cured with water or curing compounds. The form release agent shall be VOC compliant.

I. Inserts: Metal inserts for the anchorage of materials or equipment to concrete construction, not supplied by other trades and required for work.
   1. Adjustable wedge inserts of malleable cast iron, complete with bolts, nuts, and washers; 3/4 inches bolt size unless otherwise indicated.

2. Threaded inserts of malleable cast iron, furnished complete with full depth bolts; 3/4 inch bolt size, unless otherwise indicated.
3. Sheet metal reglets formed of the same type and gauge as flashing metal are to be built into reglets unless otherwise indicated. Fill the reglet or cover the face opening to prevent intrusion of concrete or debris.

J. Fillets for chamfered corners: wood strips ¾ inch by ¾ inch; maximum possible lengths.

2.2 DESIGN OF FORMWORK

A. Design, erect, support, brace and maintain formwork so that it will safely support vertical and lateral loads until such loads can be supported by the concrete structure.
1. Carry vertical and lateral loads to the ground by formwork system and in-place construction that has attained adequate strength.
2. Design forms and falsework to include assumed values of live load, dead load, the weight of moving equipment operated on formwork, ambient temperature, foundation pressures, stresses, lateral stability, and other factors pertinent to the safety of the structure during construction.
3. Design formwork to be removable without impact, shock, or damage to cast-in-place concrete surfaces and adjacent materials.

B. Fabricate formwork to prevent leakage of cement paste during concrete placement. Solidly butt joints and provide backup material as required to prevent leakage and fins.

PART 3 EXECUTION

3.1 FORM CONSTRUCTION

A. General:
1. Construct forms to sizes, shapes, lines, and dimensions shown and required to obtain the accurate location, grades, level, and plumb work. Construct and erect forms in accordance with ACI 301 and ACI 347.
2. Provide for openings, reglets, chamfers, blocking, screeds, bulkheads, anchorages and inserts, and other features required.
3. Select materials to obtain the required finishes.

B. Fabricate forms for easy removal without hammering or prying against concrete surfaces.
1. Provide crush plates or wrecking plates where stripping may damage cast concrete surfaces.
2. Provide top forms for inclined surfaces where the slope is too steep to place concrete.
3. Kerf wood inserts for forming keyways, reglets, and recesses, to prevent swelling and allow easy removal.

C. Provide temporary openings where the interior area of formwork is inaccessible for cleanout, inspection before concrete placement, and placement of concrete.
1. Brace temporary closures and set them tightly to forms to prevent loss of concrete mortar.
2. Locate temporary openings on forms in as inconspicuous a location as possible.
3. Form intersecting planes to provide true, clean-cut corners, with edge grain of plywood not exposed as a form for concrete.

D. Falsework: Erect falsework and support, brace, and maintain to safely support loads applied until such loads can be supported by in-place concrete structures.

E. Provide shores and struts with positive means of adjustment capable of taking up formwork settlement during concrete placing, using wedges or jacks or a combination thereof. Provide trussed supports when adequate foundations for shores and struts cannot be secured.

F. Support form-facing materials with structural members spaced to prevent deflection.
   1. Provide camber in formwork as required for anticipated deflections due to the weight and pressure of fresh concrete and construction loads for long-span members without intermediate supports.
   2. Inspect falsework and formwork during and after concrete placement to determine abnormal deflection or signs of failure; make necessary adjustments to produce work of the required dimension.

G. Forms for Exposed Concrete:
   1. Drill forms to suit form ties used and to prevent leakage of concrete mortar around tie holes. Arrange form ties in a symmetrical and uniform pattern. Do not splinter forms by driving ties through improperly prepared holes.
   2. Do not use metal cover plates for patching holes or defects in forms.
   3. Provide sharp, clean corners at intersecting planes without visible edges or offsets. Back joints with extra studs or girts to maintain true, square intersections.
   4. Use extra studs, walers, and bracing to prevent bowing of forms between studs.
   5. Assemble forms so they may be readily removed without damage to exposed concrete surfaces.
   6. Form molding shapes, recesses, and projections with smooth finish materials, and install them in forms with sealed joints to prevent displacement.

H. Corner Treatment: Form exposed corners of beams and columns to produce square, smooth, solid, unbroken lines, except as otherwise indicated.
   1. Form chamfers with 3/4 inch x 3/4 inch strips, unless otherwise indicated, accurately formed and surfaced to produce uniformly straight lines and tight edge joints. Extend terminal edges to the required limit and miter chamfer at changes in direction.
   2. Unexposed corners may be formed either square or chamfered.

I. Control joints are specified in Section 03 30 00, "Cast In Place Concrete."

J. Provisions for Other Work:
   1. Provide openings in formwork to accommodate the work of other Sections, including those under a separate contract (if any).
   2. Size and location of openings, recesses, and chases are the responsibility of the Section requiring such items.
   3. Accurately place and securely support items to be built into forms.

K. Cleaning and Tightening: Thoroughly clean forms and adjacent surfaces. Remove chips, wood, sawdust, dirt, and other debris just before the concrete is placed.

3.2 FORM COATINGS

A. Coat the form contact surfaces with a form release agent before reinforcement is placed.
   1. Do not allow excess material to accumulate in forms or to come into contact with reinforcement or surfaces that will be bonded to fresh concrete.
   2. Apply in compliance with the manufacturer's instructions.

B. Coat steel forms with non-staining, rust preventative release agent or otherwise protect against rusting. Rust-stained steel formwork is not acceptable.

3.3 INSTALLATION OF EMBEDDED ITEMS

A. General:
1. Set and built into work, anchorage devices, anchor bolts, and other embedded items attached to, or supported by, cast-in-place concrete.
2. Use setting drawings, diagrams, templates, instructions, and directions furnished by suppliers of items to be embedded or attached.

B. Edge Forms and Screed Strips:
1. Set edge forms or bulkheads and intermediate screed strips for slabs to obtain required elevations and contours.
2. Provide and secure units to support types of screeds required.

3.4 REMOVAL OF FORMS

A. General:
1. Formwork not supporting concrete, such as sides of beams, walls, columns, and similar items, may be removed after curing at not less than 50 deg. F for 24 hours after placing concrete, provided the concrete is sufficiently hard not to be damaged by form removal operations and curing and protection operations are maintained.
2. Formwork supporting the weight of concrete, such as beam, slab, or joist soffits, and other structural elements may not be removed until the concrete has attained seventy-five percent (75%) of the specified minimum 28-day compressive strength.
3. Determine the potential compressive strength of in-place concrete by testing field-cured specimens representative of concrete location or members, as specified in Section 03 30 00.
4. Form-facing material may be removed 4 days after placement only if shores and other vertical supports have been arranged to permit removal without loosening or disturbing shores and supports.

3.5 REUSE OF FORMS

A. Clean and repair surfaces of forms to be reused in work.
1. Split, frayed, delaminated, or otherwise damaged form-facing material will not be acceptable.
2. Apply new form release agent material to concrete contact surfaces as specified for new formwork.

B. When forms are extended for successive concrete placement, thoroughly clean surfaces, remove fins and laitance, and tighten forms to close joints.
1. Align and secure joints to avoid offsets.
2. Do not use "patched" forms for exposed concrete surfaces, except as acceptable to Architect.

END OF SECTION

SECTION 03 15 00

CONCRETE ACCESSORIES

PART 1 GENERAL

1.1 DESCRIPTION

A. This Section describes the requirements for providing accessories for concrete, including drilled-in anchors, safety treads, and water stops.

1.2 RELATED WORK

A. Division 1 – General Requirements

B. Division 3 - Concrete

1.3 REFERENCES

A. ASTM A36 – Structural Steel.

B. ASTM A193-B7 – High Strength Structural Steel.

C. ASTM A307 – Carbon Steel Bolts and Studs.

D. ASTM A615 – Deformed and Plan Billet-Steel Bars for Concrete Reinforcement.

E. ASTM B633 – Electrodeposited Coatings of Zinc on Iron and Steel.

F. ASTM B695 – Coatings of Zinc Mechanically Deposited on Iron and Steel.

G. ASTM C881 – Epoxy-Resin-Based Bonding Systems for Concrete.

H. ASTM E488 – Strength of Anchors in Concrete and Masonry Elements.

I. ASTM E1512 – Testing Bond Performance of Adhesive-Bonded Anchors.

J. ASTM F593 – Stainless Steel Bolts, Hex Cap Screws, and Studs.

K. ACI 318 – Building Code Requirements for Structural Concrete.

L. ACI 355.2 – Standard for Evaluating the Performance of Post-Installed Mechanical Anchors in Concrete.

M. ACI 355.4 – Qualification of Post-Installed Adhesive Anchors in Concrete.

N. ICC AC01 – Acceptance Criteria for Expansion Anchors in Concrete and Masonry Elements.

O. ICC AC58 – Acceptance Criteria for Adhesive Anchors in Masonry Elements.

P. ICC AC60 – Acceptance Criteria for Unreinforced Masonry Anchors.

Q. ICC AC70 – Acceptance Criteria for Powder Driver Fasteners in Concrete, Steel, and Masonry Elements.

R. ICC AC106 – Acceptance Criteria for Predrilled Fasteners (Screw Anchors) in Concrete or Masonry.

S. ICC AC193 – Acceptance Criteria for Mechanical Anchors in Concrete Elements.

T. ICC AC308 – Acceptance Criteria for Post-installed Adhesive Anchors in Concrete Elements.

U. Federal Specifications A-A-1922A, A-A-1923A, A-A-55614 for Expansion and Shield-Type Anchors.

1.4 SUBMITTALS

All submittals shall be made under Division 1 – General Requirements provisions.

1.5 QUALITY ASSURANCE

A. Perform work in accordance with the California Building Code

B. Obtain materials from the same source throughout the work.

C. Anchors should be listed as ICC or IAPMO approved for the material being installed in.

1.6 DELIVERY, STORAGE, AND HANDLING

A. Deliver materials to the site in the manufacturer's packaging, undamaged and with installation instructions.

B. Store materials to prevent damage or deterioration.

PART 2 PRODUCTS

2.1 MATERIALS

A. Waterstops: Rubber flat, dumbbell type, or center bulb type at construction joints and other joints where indicated, size to suit joints.

B. Safety Treads at stairs: Provide Wooster Products Inc. extruded aluminum base with abrasive filler safety treads: Type WP24A Spectra Safety Treads at concrete-filled metal pan stair treads and Type WP231BF Supergrit Safety Treads at cast-in-place concrete stairs.

C. Drilled-In Anchors: Acceptable manufacturers for the following products include, but are not limited to, Simpson Anchor Systems, Hilti, and Powers. Verify with the manufacturer's installation instructions and specifications for more information, including hollow substrate requirements, moisture of concrete, hole size, and type of bit used to drill holes.
   1. Expansion Anchors:
      a. Cracked Concrete Wedge Anchors: Anchors shall be designed in accordance with ACI 318 Chapter 17, which requires anchors to be evaluated per ACI 355.2. The anchors shall also be tested in accordance with AC 193 for all mandatory and optional tests, specifically seismic and wind testing.
      b. Wedge Anchors: Anchors shall meet the physical requirements of Federal

Specification A-A-1923A, Type 4. Anchors shall have an ICC or IAPMO evaluation report and be tested per AC 01 for seismic and wind loading, combined shear and tension loads, and critical and minimum edge distance. Anchor materials include carbon steel (zinc plated or mechanically galvanized), Type 304 or 316 stainless steel complying with ASTM A493, or Type 303 stainless free-machine steel complying with ASTM A582.

c. Sleeve Anchors: Anchors shall meet the physical requirements of Federal Specification A-A-1922A. Anchors shall have an ICC or IAPMO evaluation report and be tested per AC 01 for static loading and critical and minimum edge distance and spacing. Anchor materials include carbon steel with an electroplated zinc finish and Type 304 stainless steel complying with ASTM A493.

d. Flush-Mount, Internally Threaded Shell Anchors: Anchors shall meet the physical requirements of Federal Specification A-A-55614, Type I. Anchors shall have an ICC or IAPMO evaluation report, and be tested per AC 01 for seismic and wind loading, combined shear and tension loads, and critical and minimum edge distance and spacing. Anchor materials include carbon steel with an electroplated zinc finish, Type 316 stainless steel complying with ASTM A493, or Type 303 stainless free-machine steel complying with ASTM A582.

2. Adhesive Anchors: Adhesive anchors shall consist of an insert and an adhesive formula. Inserts shall meet the requirements of ASTM A307, A36, A193-B7, or F1554 for threaded rods or ASTM A615 or A706 for reinforcing steel. For exterior conditions, the threaded insert shall be galvanized per ASTM A153 or be a 300 series stainless steel with nuts and washers of the same material. Use an adhesive material meeting one of the following criteria.

   a. Epoxy Adhesives: Adhesives shall be a cartridge-type, two-component, solid epoxy-based system dispensed and mixed through a static mixing nozzle supplied by the manufacturer. Anchors shall meet the minimum requirements of ASTM C881, have an ICC or IAPMO evaluation report, and be tested per AC 308 for seismic and wind loading, long-term creep at elevated temperatures, static loading at elevated temperatures, damp and water-filled holes, freeze-thaw conditions, and critical and minimum edge distance and spacing. Installation temperatures shall be verified with the manufacturer's instructions.

   b. Acrylics Adhesives: Adhesive shall be a cartridge type, two-component, acrylic-based system dispensed and mixed through a static mixing nozzle supplied by the manufacturer. Anchors shall meet the minimum requirements of ASTM C881, have an ICC or IAPMO evaluation report, and be tested per AC 308 for seismic and wind loading, long-term creep at elevated temperatures, static loading at elevated temperatures, damp and water-filled holes, freeze-thaw conditions, and critical and minimum edge distance and spacing. Installation temperatures shall be verified with the manufacturer's instructions.

   c. Encapsulated Adhesives: Capsule shall be a two-component, vinylester-based adhesive capsule-within-a-capsule system supplied in a manufacturer's standard packaging. Capsule adhesive shall be tested per AC 308 for a long-term creep at elevated temperatures and critical and minimum edge distance and spacing. Installation temperatures shall be verified with the manufacturer's instructions.

3. Concrete Screw Anchors:

   a. Self-Tapping Concrete Screw Anchors: Anchors shall have 360-degree contact with the concrete surface and shall not require oversized or undersized holes for installation. Fastener material shall be steel complying with AISI 10B21 or 15B21, heat-treated and zinc-plated, or mechanically galvanized. Anchors shall have an ICC or IAPMO report and be tested in accordance with AC 106 for static tension, shear loading, and critical and minimum edge distance and spacing.

4. Powder Actuated Fasteners:

   a. Fasteners shall be of drive pin and threaded stud types and be manufactured from AISI 1060 to 1065 steel with an electroplated zinc finish. The minimum yield

strength shall be 90,000 psi.

b. Fasteners shall not be used where spalling of the concrete will occur. If spalling does occur, patch as required per Section 03 01 00.

PART 3 EXECUTION

3.1 INSTALLATION

A. Water Stops: Provide water stops in construction joints as indicated.
1. Install water stops to form a continuous diaphragm in each joint.
2. Make provisions to support and protect water stops during the progress of work.
3. Fabricate field joints in water stops per the manufacturer's printed instructions.

B. Safety Treads at stairs:
1. Install all safety treads per the manufacturer's instructions with the appropriate tools in the correct locations.

C. Anchors:
1. Install all anchors per the manufacturer's instructions with the appropriate tools.
2. Where holes are drilled for anchors, holes shall be accurately and squarely drilled and cleaned per the manufacturer's instructions.
3. The contractor shall arrange for a manufacturer's field representative to provide installation training for all products to be used before the commencement of work. Only trained installers shall perform post-installed anchor installation. A record of training shall be kept on-site and made available to the EOR/ IOR as requested.
4. Adhesive anchors installed in horizontal to vertical overhead orientation to support sustained tension loads shall be done by a certified adhesive anchor installer (AAI) as certified through ACI/CRSI (ACI 318 Chapter 17). Proof of current certification kept on site and made available to the EOR/ IOR as requested.
5. Adhesive anchors must be installed in concrete aged a minimum of 21 days (ACI 318 Chapter 17). For installations sooner than 21 days, consult the adhesive manufacturer.

3.2 FIELD QUALITY CONTROL

A. Load test 100% of all anchors used in a structural condition (i.e., anchors or holdown bolts). See General Structural Note's sheet for load test values.

END OF SECTION

SECTION 03 15 16

CONCRETE CONSTRUCTION JOINTS

PART 1 GENERAL

1.1 WORK INCLUDED

A. Forming integral contraction and control joints in concrete.

B. Visually concealing expansion joints in concrete.

1.2 WORK FURNISHED BUT INSTALLED UNDER OTHER SECTIONS

A. Furnish only integral joint fillers; see Section 03 11 13 for installation.

1.3 RELATED WORK

A. Division 1 – General Requirements.

B. Division 3 - Concrete.

C. Division 7 – Thermal and Moisture Protection.

1.4 REFERENCES

A. ASTM D994 - Preformed Expansion Joint Filler for Concrete (Bituminous Type).

B. ASTM D1751 – Pre-formed Expansion Joint Fillers for Concrete Paving and Structural Construction.

1.5 SUBMITTALS

All submittals shall be submitted under Division 1 – General Requirements provisions.

A. Submittal No. 03 15 10A – Product Data: Not required.

B. Submittal No. 03 15 10B – Shop Drawings: Not required.

C. Submittal No. 03 15 10C – Samples for Verification:
   1. Provide 24-inch long contraction and control joint samples under provisions of Section 01 33 00.

D. Submittal No. 03 15 10D – Manufacturer's Installation Instructions:
   1. Submit the manufacturer's installation instructions.

E. Submittal No. 03 15 10E (#) – Joint Layouts:
   1. Submit the proposed construction and control joint layout to Architect seven (7) days before forming concrete.

PART 2 PRODUCTS

2.1 ACCEPTABLE MANUFACTURERS - INTEGRAL JOINT MATERIALS

A. Burke

B. Substitutions: Under provisions of Division 1 – General Requirements.

2.2 INTEGRAL JOINT MATERIALS

A. Formed Construction Joints: Minimum 26 gage thick galvanized steel; tongue and groove type profile, with removable top strip exposing sealant trough; knockout holes at 6 inches on center to receive doweling; with anchors.

B. Joint Filler (Fiberboard): ANSI/ASTM D994, bituminous impregnated fiberboard; of sizes detailed.

2.3 SEALANTS

A. Sealant and Primer: Specified in Section 07 92 00.

PART 3 EXECUTION

3.1 INSTALLATION

A. Construction Joints: Locate and install construction joints as indicated or if not indicated so as not to impair the strength and appearance of the structure, as approved by Architect.
   1. Provide keyways at least 1 1/2 inches deep in construction joints in walls and slabs.
   2. Place construction joints perpendicular to the main reinforcement. Continue reinforcement across construction joints.

B. Waterstops: Provide water stops in construction joints as indicated.
   1. Install water stops to form a continuous diaphragm in each joint.
   2. Make provisions to support and protect water stops during the progress of work.
   3. Fabricate field joints in water stops per the manufacturer's printed instructions.

C. Isolation Joints in Slabs on Grade: Provide at contact points between slabs on grade and columns.

D. Control Joints in Slabs on Grade: Provide control joints in slabs on grade to form panels or patterns as indicated. Use inserts 1/8 to 1/4 inch wide x 1/4 of slab depth unless otherwise indicated.
   1. Form control joints by inserting pre-molded plastic, hardboard, or fiberboard strip into fresh concrete until the top surface of the strip is flush with the slab surface. Tool slab edges round on each side of the insert.
   2. After the concrete has cured, remove the inserts and clean the groove of loose debris.
   3. Control joints may be produced by saw cuts 1 inch deep, using powered cutters immediately after the concrete has cured sufficiently to carry the machine weight.
   4. Unless otherwise indicated, joint spacing in slabs on grade shall be 24 to 36 times slab thickness.

E. Epoxy Joint Filler: Interior joints in areas receiving a metallic or mineral aggregate hardener shall be filled with specified epoxy filler. The joint filler shall be mixed and installed per the manufacturer's instructions. Joints shall not be filled until at least 90-days after slab placement.

F. Locate the fiberboard concrete control joint where indicated on the Drawings.

G. Place formed construction joints in the floor slab pattern placement sequence. Set the top screed to the required elevations. Secure to resist movement of wet concrete.

H. Install joint fillers and sealants per the manufacturer's instructions.

I. Apply sealants per Section 07 92 00.

END OF SECTION

SECTION 03 21 00

REINFORCEMENT BARS

PART 1 GENERAL

1.1 DESCRIPTION

A. This Section describes the requirements for providing concrete reinforcement for:
   1. Reinforcing steel bars, welded steel wire fabric for cast-in-place concrete
   2. Support chairs, bolsters, and bar supports for supporting reinforcement
   3. Drilled piers: Installation of reinforcement is specified in Division 31 – Earthwork.

1.2 RELATED WORK

A. Division 1 – General Requirements

B. Division 3 - Concrete

1.3 REFERENCES

A. ACI 318 – Specifications for Structural Concrete

B. ACI 315 – Details and Detailing of Concrete Reinforcement

C. ASTM A185 – Welded Steel Wire Fabric for Concrete Reinforcement

D. AWS D1.4 – Structural Welding Code Reinforcing Steel

E. ASTM A615 – Deformed and Plain Billet-Steel Bars for Concrete Reinforcement

F. CBC, Chapter 19

G. CRSI Manual of Standard Practice

H. ASTM A706 – Low Alloy Deformed and Plain Bars for Concrete Reinforcement.

1.4 SUBMITTALS

All submittals shall be submitted under Division 1 - General Requirements provisions.

A. Submittal No. 03 21 00A (#) - Product Data:
   1. Manufacturer's product data, specifications, and installation instructions for proprietary materials and accessories

B. Submittal No. 03 21 00B (#) – Shop Drawings:
   1. Comply with ACI 315
   2. Indicate sizes, spacing, locations, and quantities of reinforcing steel, bending and cutting schedules, splice locations, stirrup and tie spacing, and supporting and spacing devices.

C. Submittal No. 03 21 00C (#) - Samples: Not required.

D. Submittal No. 03 21 00D (#) - Mill Certificates:
   1. Steel producer's certificates of mill analysis, tensile and bend tests for reinforcing steel.

1.5 QUALITY ASSURANCE

A. Reinforcement work shall comply with ACI 318 and ACI 315.

B. Welding procedures, welding operators, and welders shall be qualified in accordance with AWS D1.4. Welders whose work fails to pass inspection shall be re-qualified before proceeding with further welding.

C. Test of Reinforcing Bars: Testing may be waived per CBC 1909.2.4, provided that certified mill test reports are provided for each shipment of reinforcement. If no reports are provided, testing of bars will be required.

1.6 DELIVERY, STORAGE, AND HANDLING

A. Deliver reinforcement to the Project site bundled, tagged, and marked. Use metal tags indicating bar size, lengths, and other information corresponding to markings shown on shop drawings.

B. Store materials to prevent damage and accumulation of dirt or excessive rust.

PART 2 PRODUCTS

2.1 MATERIALS

A. Reinforcing Bars: ASTM A615, deformed, Grade 60

B. Bars for Welded Splices: ASTM A706, low alloy steel

C. Steel Wire: ASTM A82-02; 16 gauge minimum

D. Deformed Wire: ASTM A496

E. Welded Smooth Wire Fabric: ASTM A185

F. Supports for Reinforcement: Bolsters, chairs, spacers, and other devices for spacing, supporting, and fastening reinforcement in place
   1. Use wire bar type supports complying with CRSI recommendations unless otherwise indicated. Do not use wood, brick, and other unacceptable materials.
   2. Use supports with sand plates or horizontal runners where base material will not support chair legs for slabs on grade.
   3. For exposed-to-view concrete surfaces, where legs of supports are in contact with forms, provide supports with:
      a. Plastic-protected legs (CRSI, Class 1)
      b. Stainless steel protected legs (CRSI, Class 2)
      c. Either plastic-protected or stainless steel-protected legs, at the Contractor's option.

2.2 FABRICATION

A. General:
   1. Fabricate reinforcing bars to conform to required shapes and dimensions, with fabrication tolerances complying with ACI 315 and CRSI "Manual of Standard Practice."

2. Do not re-bend or straighten reinforcing.
3. Unacceptable Materials: Reinforcement with one of the following defects will not be permitted in the work:
   a. Bar lengths, depths, and bends exceeding CRSI fabrication tolerances
   b. Bends or kinks not indicated
   c. Bars with a reduced cross-section

2.3 SOURCE QUALITY CONTROL

A. The Owner's Testing Laboratory will collect mill test reports for reinforcement.

PART 3 EXECUTION

3.1 INSTALLATION

A. Comply with referenced codes and standards.

B. Clean the reinforcement to remove loose rust and mill scale, earth, and other materials that reduce or destroy the bond with concrete.

C. Accurately position, support, and secure reinforcement against displacement by formwork, construction, or concrete placement operations. As required, locate and support reinforcing by metal chairs, runners, bolsters, spacers, and hangers.

D. Place reinforcement to obtain minimum coverage for concrete protection.

E. Ensure bar spacing meets the requirements of ACI 318, except that the clear distance between bars shall be 1-1/2-inches minimum.

F. Arrange, space, and securely tie bars and bar supports with 16 gauge wire to hold reinforcement in position during concrete placement operations. Set wire ties so twisted ends are directed away from exposed concrete surfaces.

G. Install welded wire fabric in lengths as long as possible.
   1. Lap the adjoining pieces at least one full mesh, 12" minimum, and lace splices with 16 gauge wire.
   2. Do not lap pieces midway between supporting beams or directly over beams of continuous structures.
   3. Offset end laps in adjacent widths.

H. Provide sufficient numbers of supports of strength to carry reinforcing.
   1. Do not place reinforcing bars more than 2-inches beyond the last leg of continuous bar supports.
   2. Do not use supports as bases for runways for concrete conveying equipment and similar construction loads.

I. Splices: Splice bars by lapping ends and tightly wire tying. Comply with the requirements of ACI 318 for the minimum lap of spliced bars.

J. Welding:
   1. Comply with the requirements of AWS D1.4 for field welding.
   2. Before field welding, determine the weldability of reinforcing bars by laboratory chemical analysis of steel.
   3. Only steel conforming to chemical requirements specified in AWS D12.1 may be welded.

4. Inspection and Test of Welds: All inspections and testing of welds shall be conducted per the General Structural Notes, by the Building Official, and the CBC.

K. The Architect shall be notified 48 hours before pouring concrete for form and steel placement inspection.

END OF SECTION

SECTION 03 30 00

CAST-IN-PLACE CONCRETE

PART 1 GENERAL

1.1 DESCRIPTION

A. This Section describes the requirements for providing cast-in-place concrete.

1.2 RELATED WORK

A. Division 1 – General Requirements

B. Division 3 - Concrete

1.3 REFERENCES

A. ACI 301 – Specifications for Structural Concrete Buildings

B. ASTM C33 – Concrete Aggregates

C. ASTM C94 – Specifications for Ready-Mixed Concrete

D. ASTM C150 – Portland Cement

E. CBC Chapter 19

F. ASTM C309 – Liquid Membrane – forming compounds for curing concrete

G. ACI 614 – Recommended Practice for Measuring, Mixing, and Placing Concrete

H. ASTM C31 – Making and Curing Concrete Test Specimens in the Field

I. ASTM C39 – Test Method for Compressive Strength of Cylindrical Concrete Specimens

J. ACI 318 – Building Code Requirements for Structural Concrete

K. ACI 305 – Hot Weather Concreting

L. ACI 306 – Cold Weather Concreting

1.4 SUBMITTALS

All submittals shall be submitted under Division 1 – General Requirements provisions.

A. Submittal No. 03 30 00A (#) – Mix Designs:
   1. Provide a mix design for each class of concrete specified.

B. Submittal No. 03 30 00B (#) – Laboratory Test Reports:
   1. Laboratory test reports for concrete.

C. Submittal No. 03 30 00C (#) – Material Certificates:
   1. Furnish materials certificates instead of laboratory test reports when permitted by the Architect. Material producers and Contractors certifying that each material item complies with or exceeds specified requirements should sign material certificates.

D. Submittal No. 03 30 00D (#) – Placement Schedule:
   1. Prepare a placement schedule and submit it to Architect for review before the start of work.

E. Submittal No. 03 30 00E (#) – Delivery Tickets:
   1. Furnish copies of delivery tickets for each load of concrete delivered to the site to the Project Inspector. Provide the information specified.

1.5 QUALITY ASSURANCE

A. Perform Work per ACI 301 and the California Building Code

B. Obtain materials from the same source throughout the Work.

C. Concrete Testing:
   1. Owner shall employ a testing laboratory experienced in design and testing concrete materials and mixes to perform material evaluation tests.
   2. As directed by Architect, materials and installed work may require testing and retesting during work progress.
      a. Allow access to material stockpiles and facilities.
      b. Owner shall pay for testing. Retesting concrete that replaces previously rejected concrete and core testing required to establish the adequacy of in-place concrete shall be done at the Contractor's expense.
      c. All tests as required by ACI 318 Chapter 26 and as outlined in the General Structural Notes of the construction drawing set, by the Building Official and the CBC.

D. Colored Concrete Mock-up
   1. In consultation with the Owner, select a small isolated area of the slab, such as an electrical closet) for mock-up.
   2. Apply colored surface hardener in the mock-up area using the same equipment and installation procedure planned for the balance of the Project.
   3. If the Architect accepts, the mock-up may be incorporated into the work and become the production standard for the balance of the Project.

PART 2 PRODUCTS

2.1 CONCRETE MATERIALS

A. Portland Cement: ASTM C150, Type II gray color unless otherwise approved. Use only one brand of cement for each required type throughout Project unless otherwise approved by Architect.

B. Normal Weight Aggregates: ASTM C33.

C. Water: Clean, fresh, and not detrimental to concrete.

D. Admixtures: Use in compliance with the manufacturer's printed instructions. Do not use admixtures that have not been incorporated and tested in accepted mixes unless approved

by Architect.
1. Water Reducing Admixture: Conforming with ASTM C494.
2. Water Reducing, Retarding Admixture: ASTM C494.
3. Mid Range Water Reducing Admixture: ASTM C494, Type A.
4. High-Range Water Reducing Admixture: ASTM C494, Type F or G.
5. Air Entraining Admixture: ASTM C260.
6. Non-Corrosive, Non-Chloride Accelerator: ASTM C494, Type C or E.
7. Prohibited Admixtures: Calcium chloride, thiocyanates, or admixtures containing more than 0.05-percent chloride ions are not permitted.

2.2 PROPORTIONING AND DESIGN OF MIXES

A. Where the concrete production facility can establish the uniformity of its production for concrete of similar strength and materials based on recent test data, the average strength used as a basis for determining mix design proportions shall exceed the specified design strength by the requirements of ACI 318 or ACI 301

B. When a concrete production facility does not have field test records for calculation of standard deviation, the required average strength used as the basis for determining mix design proportions shall be at least 1000 psi greater than the specified concrete strength of less than 3000 psi concrete and 1200 psi greater than the specified compressive strength of 3000 psi or greater concrete.

C. Mix design submission shall be accompanied by complete standard deviation analysis or trial mixture test data.

D. Submit written reports to the Architect of each proposed mix for each type of concrete at least 15 days before the start of work. Do not begin concrete production until mixes have been reviewed and accepted.

E. Admixtures:
1. Concrete shall contain the specified water-reducing or water-reducing retarding admixture and/or high-range water-reducing admixture. Concrete required to be air-entrained shall contain an approved air-retraining admixture. Pumped concrete, concrete for industrial slabs, fiber concrete, architectural concrete, concrete required to be watertight, and concrete with a water-cement ratio below 0.50 shall contain the specified high-range water-reducing admixture.
2. Use air-entraining admixture in exterior concrete unless otherwise indicated. Add at the manufacturer's prescribed rate to produce concrete at the point of placement with the specified air content.

F. Concrete Types: Concrete Strengths (all normal weight)

LOCATION	28-DAY COMPRESSIVE STRENGTH (f'c)	MAX WATER CEMENT RATIO	AIR CONTENT
Footings, walls, drilled piers, grade beams, retaining walls, & other below grade concrete.	3000 psi	.50	0-2%
Exterior slabs on grade	2500 psi	.50	5-6%
Interior slabs on grade	2500 psi	.50	0-2%
Fill on metal deck	3000 psi	.50	0-2%

G. Slump Limits: Concrete containing the high-range water-reducing admixture shall have a maximum slump of 9-inches unless approved by the Architect. The concrete shall arrive at the Project site at a slump of 2- to 3-inches, be verified, then the high-range water-reducing admixture added to increase the slump to the approved level. All other concrete shall have a

maximum slump of 4 inches for slabs and 5 inches for other members unless concrete contains a mid-range water-reducing admixture.

H. Chloride ion content of aggregates of constituents shall be tested by the laboratory when directed by the Architect. The total chloride ion content of the mix, including all constituents, shall not exceed 0.06-percent, or 0.10-percent, or 0.15-percent chloride ions by weight of cement.

2.3 SOURCE QUALITY CONTROL

A. The Owner's Testing Laboratory will provide source quality control as outlined in the General Structural Notes of the construction drawing set.

PART 3 EXECUTION

3.1 PREPARATION

A. Pre-placement Inspection:
1. Before placing concrete, inspect formwork, reinforcing steel, and items to be embedded or cast in as outlined in the General Structural Notes of the construction drawing set.
2. Moisten wood forms immediately before placing concrete where form coatings are not used.
3. Soil at the bottom of foundation systems is subject to testing for soil-bearing value by the testing laboratory as specified in Section 31 00 00, "Earthwork." Place concrete immediately after approval of excavations.
4. Coordinate the installation of joint materials and moisture barriers with the placement of forms and reinforcing steel.

B. Moisture Barrier Material: Where concrete slabs are indicated to be placed over moisture barrier; spread moisture barrier over subbase with edges and ends lapped 6 inches and sealed.

3.2 CONCRETE MIXING

A. Measurement: Materials for concrete shall be measured by weighing the aggregates and cement using suitable equipment designed and constructed for this purpose. Each size of aggregate and the cement shall be weighed separately. The accuracy of measuring devices shall be such that quantities are measured to within the following percentages of the desired amount: 1 percent for cement and water, 2 percent for aggregates, and 3 percent for admixtures. Mixing water and admixtures shall be measured by volume.

B. Mixing: All concrete shall be transit mixed. Deposit the concrete into the final position within one hour of the introduction of mixing water.

3.3 CONCRETE PLACEMENT

A. Notify the Architect a minimum of 48 hours before the commencement of concreting procedures.

B. Placing Record: Record time and date of casting concrete in building units; maintain record open to inspection by the Architect.

C. General: Place concrete in compliance with ACI 301, ACI 614, and ACI 318.
1. Deposit concrete continuously or in layers so that concrete will not be placed on

concrete that has hardened sufficiently to cause seams or planes of weakness. Provide construction joints as specified if a section cannot be placed continuously. Deposit concrete as nearly as possible to its final location to avoid segregation.

2. Concrete shall not be placed until the Architect inspects and approves reinforcement, pipes, conduits, or other set-in items. Concrete shall not be placed on soft or water-soaked ground, in water, on frozen ground, or surfaces that are covered by frost. Wood forms shall be thoroughly wetted before concrete is placed.
3. Screed concrete to receive other construction to the proper level to avoid excessive skimming or grouting.
4. Do not use concrete that becomes non-plastic and unworkable, does not meet required quality control limits, or has been contaminated by foreign materials.
5. Do not re-temper concrete.
6. Remove rejected concrete from the Project site.

D. Concrete Conveying: Handle concrete from the point of delivery and transfer to concrete conveying equipment and to locations of final deposit as rapidly as possible by preventing segregation and loss of mixed materials.
1. Provide mechanical equipment for conveying concrete to ensure continuous flow at the delivery end.
2. Provide runways for wheeled concrete conveying equipment from the delivery point to locations of final deposit.
3. Keep interior surfaces of conveying equipment, including chutes, free of hardened concrete, debris, water, snow, ice, and other deleterious materials.
4. Maximum height of fall of concrete shall be 4' 0", except when tremies, tubes, or elephant trunks are used. Concrete mix with a temperature above 80 degrees F will not be accepted.

E. Placing Concrete into Forms:
1. Deposit in forms in horizontal layers not deeper than 24 inches in a manner to avoid inclined construction joints.
2. Where placement consists of several layers; place each layer while the preceding layer is still plastic to avoid cold joints.
3. Remove temporary spreaders in forms when concrete placing has reached elevations of spreaders.
4. Consolidate concrete with mechanical vibrating equipment supplemented by hand spading, rodding, or tamping. Do not vibrate forms and reinforcing.
5. Do not use vibrators to transport concrete inside forms.
   a. Insert and withdraw vibrators vertically at uniformly spaced locations not farther than the visible effectiveness of the machine.
   b. Place vibrators to rapidly penetrate at least 6 inches into the preceding layer.
   c. Do not insert vibrators into lower layers of concrete that have begun to set.
   d. At each insertion, limit vibration duration to the time necessary to consolidate concrete and complete embedment of reinforcement and other items without causing segregation of mix.

F. Placing Concrete Slabs:
1. Deposit and consolidate concrete slabs in continuous operation within the limits of construction joints until the panel or Section is completed.
2. Separate the exterior slabs on grade from vertical surfaces with joint filler. Extend the joint filler from the bottom of the slab to within 1/2 inch of the finished slab surface.
3. There shall be no variations in the concrete slab that exceed 1/8" in a 10' radius. (USE FOR WOOD SPORTS FLOORING)

G. Consolidate concrete during placing operations using mechanical vibrating equipment so that concrete is thoroughly worked around reinforcement, other embedded items, and

corners.

H. Bring slab surfaces to the correct level with a straightedge and strike off.
   1. Use bull floats or darbies to smooth the surface, leaving it free of humps or hollows.
   2. Do not disturb the slab surface before beginning the finishing operations.

I. Maintain reinforcing steel in proper position during concrete placement operations.

J. Excessive honeycomb or embedded debris in concrete is not acceptable. Notify the Architect/Engineer upon discovery.

K. Use of additional water in mixing the concrete to promote free flow in chutes of low inclination or any other reason will not be allowed.

L. In case of rain or inclement weather, freshly poured concrete shall be protected against infiltration of external water. Placing shall be terminated against the nearest construction joint bulkhead and covered at once with tarpaulins or similar waterproof protection until the concrete has set.

3.4 FINISH ON FORMED SURFACES

A. Rough Form Finish: Provide as cast rough form finishes to formed concrete surfaces concealed in finish work or by other construction unless otherwise indicated.
   1. Standard rough form finish shall be the texture imparted by the form-facing material used, with tie holes and defective areas repaired and patched and fins and other projections exceeding 1/4 inch in height rubbed down or chipped off.

B. Smooth Form Finish: Provide a cast smooth form finish for formed surfaces exposed to view or that are covered with a coating material applied directly to concrete or a covering material bonded to concrete such as waterproofing, damp proofing, painting, or similar system.
   1. Produce smooth form finish by selecting form material to impart a smooth, hard, uniform texture and arranging them orderly and symmetrically with minimum seams.
   2. Repair and patch defective areas; remove and smooth fins and other projections.

3.5 CONCRETE SURFACE REPAIRS

A. Patch defective areas with specified proprietary patching mortar or cement mortar immediately after the removal of forms when directed by Architect.
   1. Cut out honeycomb, rock pockets, voids over l/4 inch, and holes left by tie rods and bolts down to solid concrete.
      a. Make edges of cuts perpendicular to the concrete surface.
      b. Before placing patching mortar, clean, dampen with water, and brush coat the area to be patched with a bonding agent.
   2. For exposed-to-view surfaces, blend white portland cement and standard portland cement so that when dry, patching mortar will match the color of the surrounding concrete.
      a. Provide test areas at inconspicuous locations to verify mixture and color match before proceeding with patching.
      b. Compact mortar in place and strike off slightly higher than the surrounding surface.

B. Repair of Formed Surfaces: Repair exposed to view formed concrete surfaces that contain defects impacting finish appearance.
   1. Remove and replace concrete with defective surfaces if defects cannot be repaired to the satisfaction of the Architect.
   2. Surface defects include color and texture irregularities, cracks, spalls, air bubbles,

honeycomb, rock pockets; fins and other projections on the surface; and stains and other discolorations that cannot be removed by cleaning.

3. Flush out form tie holes, fill with dry pack mortar, or precast cement plugs secured in place with a bonding agent.
4. Repair concealed formed concrete surfaces containing defects that adversely affect the durability of concrete. Remove and replace concrete with defective surfaces if defects cannot be repaired.

C. Repair of Unformed Surfaces: Test unformed surfaces for smoothness and to verify surface plane to specified tolerances. Correct low and high areas as specified.

1. Test unformed surfaces sloped to drain for trueness of slope, in addition to smoothness, using a template having the required slope - correct high and low areas as specified.
2. Repair finished unformed surfaces containing defects affecting the durability of concrete. Surface defects include cracks over 0.01 inch wide or penetrating to reinforcement or completely through non-reinforced sections regardless of width, spalling, popouts, honeycomb, rock pockets, and other conditions.
3. Correct high areas by grinding after the concrete has cured for at least 14 days.
4. Correct the low areas during or immediately after the completion of surface finishing operations by cutting out the low area and replacing it with fresh concrete.
5. Repair defective areas, except random cracks and single holes not exceeding 1-inch diameter, by cutting out and replacing them with fresh concrete.
   a. Remove defective areas to sound concrete with clean, square cuts, and expose reinforcing steel with at least 3/4 inch clearance around it.
   b. Dampen concrete surfaces in contact with patching concrete and apply bonding compound.
   c. Mix patching concrete to produce concrete of the same type or class as the original adjacent concrete.
   d. Place, compact, and finish as required to blend with adjacent finished concrete.
   e. Cure in the same manner as adjacent concrete.
6. Repair isolated random cracks and single holes not over 1 inch in diameter by dry pack method.
   a. Groove the top of cracks, cut out holes to sound concrete, and remove dust, dirt, and loose particles.
   b. Dampen cleaned concrete surfaces and brush them with a neat cement grout coating.
   c. Mix dry pack, consisting of 1 part portland cement to 2 1/2 parts fine aggregate passing a No. 16 mesh sieve, using only enough water required for handling and placing.
   d. Place the dry pack after the bonding compound has dried.
   e. Compact the dry pack mixture in place and finish to match adjacent concrete.
   f. Keep patched areas moist for not less than 72 hours.

END OF SECTION

SECTION 03 39 00

CONCRETE CURING

PART 1 GENERAL

1.1 DESCRIPTION

A. This Section describes the requirements for the curing of concrete.

1.2 RELATED WORK

A. Division 1 – General Requirements

B. Division 3 - Concrete

1.3 REFERENCES

A. ACI 301 – Specifications for Structural Concrete Buildings

B. ASTM C94 – Specifications for Ready-Mixed Concrete

C. CBC Chapter 19

D. ASTM C171 –Sheet Materials for Curing Concrete

E. ASTM C309 – Liquid Membrane-Forming compounds for Curing Concrete

F. ACI 318 – Building Code Requirements for Structural Concrete

1.4 QUALITY ASSURANCE

A. Perform Work per ACI 301 and ACI 318 Chapter 5.

B. Obtain materials from the same source throughout the Work.

PART 2 PRODUCTS

2.1 MATERIALS

A. Absorptive Cover: Burlap cloth made from jute or kenaf, weighing approximately 9 ounces per sq. yd.

B. Moisture Retaining Cover: Polyethylene film complying with ASTM C171.

C. Curing Compound: VOC compliant, clear, with a drying time of 40-minutes, complying with ASTM C309, Type 1, Class B when applied at 200-square feet per gallon.

PART 3 EXECUTION

3.1 CONCRETE CURING AND PROTECTION

A. General: Protect freshly placed concrete from premature drying and excessive cold or hot temperatures.

B. Curing and Protection: Surfaces not in contact with forms.
1. Curing shall be by application of the specified curing and sealing compound or by application of waterproof sheet materials conforming to ASTM C171.
2. Liquid membrane-forming curing and sealing compounds shall be applied per the manufacturer's recommendations and as specified.
3. Application of sheet materials shall be as specified.
4. Membrane curing compound used in floor slabs receiving applied finish flooring shall be guaranteed by the manufacturer, in writing, not to impair the bonding of adhesive.
5. For slabs to receive terrazzo, bonded cementitious materials, epoxy or urethane coatings, liquid floor hardener, and waterproofing, use a curing treatment of moisture-retaining covers.
6. Apply curing compound immediately after final finishing.
7. For curing by waterproof sheet material, the concrete shall be continually moist-cured for a minimum of 7-days. The curing process shall begin immediately after the final finishing.

C. Interior slabs and exterior slabs, sidewalks, and curbs shall be cured with clear curing and sealing compound. Maximum coverage shall be 400-sq. ft. per gal. on steel troweled surfaces and 300-sq. ft. per gal. on floated or broomed surfaces. The curing period shall be continuous for a minimum duration of 7-days when the ambient temperature exceeds 50-deg. F.

D. Moisture Cover Curing:
1. Cover concrete surfaces with moisture-retaining cover conforming to ASTM C171 for curing concrete, placed in the widest possible width, with sides and ends lapped at least 3 inches and sealed by waterproofing tape or adhesive.
2. Repair holes or tears during the curing period using cover material and waterproof tape.

E. Liquid Membrane Curing:
1. Apply membrane-forming curing compound to damp concrete surfaces as soon as possible after the final finishing operations are complete, but no later than 2 hours.
2. Apply uniformly in continuous operation by power spray or rollers per the manufacturer's directions.
3. Recoat areas that are subjected to heavy rainfall within 3 hours after initial application.
4. Maintain continuity of coating and repair damage during the curing period.
5. Apply to horizontal surfaces when concrete is dry to touch with power spray or hair broom, per the manufacturer's directions.
6. Apply to vertical surfaces within 24 hours after forms are stripped per the manufacturer's directions. Do not use where oil form coatings have been used.

F. Curing Formed Surfaces: Cure formed concrete surfaces, including undersides of beams, supported slabs, and similar surfaces, by moist curing with forms in place for the entire curing period or until forms are removed. If forms are removed, continue curing by the methods specified above.

G. Temperature of Concrete During Curing: When the atmospheric temperature is 40 deg. F and below, maintain a concrete temperature between 50 deg. F and 70 deg. F throughout the curing period.
1. When necessary, arrange for heating, covering, insulation, or housing required to maintain specified temperature and moisture conditions during the curing period.
2. When concrete slab placements are subject to high temperatures, wind, and/or low humidity, the Architect may require the use of the evaporation retarder to minimize

plastic cracking. The compound may be required to be applied one or more times during the finishing operations. The initial application shall be made after the strike-off operation.

3. Protect concrete continuously during the curing period.
4. Maintain concrete temperature as uniformly as possible, and protect from rapid atmospheric temperature changes. Avoid temperature changes in concrete that exceed 5 deg. F. in one hour, and 50 deg. F. in 24-hour periods.
5. Protect from Mechanical Injury: During the curing period, protect concrete from load stresses, heavy shock, excessive vibration, and damage caused by rain or flowing water. Protect finished concrete surfaces from damage by subsequent construction operations.

END OF SECTION

SECTION 03 45 00

PRECAST ARCHITECTURAL CONCRETE

PART 1 GENERAL

1.1 SUMMARY

A. Section Includes: Provide precast architectural concrete units.

1.2 REFERENCES

A. Prestressed Concrete Institute (PCI), MNL 117: Manual for Quality Control for Plants and Production of Architectural Precast Concrete Products.

B. American Welding Society, AWS D1.1: Structural Welding Code.

1.3 SYSTEM DESCRIPTION

A. Design Requirements: Design precast concrete in accordance with California Building Code, ACI 318, and under direct supervision of registered civil or structural engineer fully experienced in design of architectural precast concrete.
   1. Manufacture units to ensure similarity of dimension and finish.
   2.

B. Performance Requirements: Design units to support required live and dead loads as indicated in California Building Code.
   1. Design component connections to withstand weight of, and forces subjected to, precast concrete units.
   2. Allow for foundation settlement and building movement.
   3. Provide adjustment connections to accommodate structural tolerances.
   4. Design system to accommodate movement in structure and between cladding elements and structure without permanent distortion, component damage, joint connection wracking, or seal breakage.

1.4 SUBMITTALS

A. Product Data: Submit test results.

B. Shop Drawings:
   1. Indicate unit locations, identification marks, fabrication details, reinforcement, connection details, pertinent dimensions, and erection support points.
      a. Unit identification marks shall appear on manufactured units in areas concealed after construction is complete.
      b. Design calculations for reinforcing, hoisting and connection and anchorage devices.

C. Samples: Submit 2" thick samples, with one surface representative of each required finish.

1.5 QUALITY ASSURANCE

A. Qualification of Manufacturer: Company specializing in architectural precast products normally associated with high quality finishes, and with minimum five years successful

experience in work of comparable scope.

B. Qualification of Installer: Manufacturer or firm with minimum five years successful experience in work of comparable scope and approved by manufacturer.

C. Welders Qualifications: AWS D1.1 qualified.

1.6 DELIVERY, STORAGE, AND HANDLING

A. Handle units in positions consistent with their shape and design; lift and support only from support points indicated on shop drawings.

B. Embedded Lifting and Handling Devices: Capable of supporting units in positions anticipated during manufacture, storage, transportation and erection.

C. Block and laterally brace precast during transport and while stored on-site; provide lateral bracing sufficient to prevent bowing and warping.
   1. Blocking and Bracing: Clean, non-staining and shall not prevent uniform curing of exposed surfaces.

D. Protect edges of units to prevent staining, chipping or spalling of concrete; damaged panels will be rejected.

PART 2 PRODUCTS

2.1 MANUFACTURERS

A. Napa Valley Cast Stone

B. Walters and Wolf Precast

C. Clark Pacific

D. Willis Construction Co. Inc.

E. Dura Art Stone

F. Techlith, “Ultralight Cast Stone”

G. Or accepted equal

2.2 MATERIALS

A. General Materials Requirements: Conform to ACI 318, including ASTM standards and specifications referenced in ACI 318.

B. Precast Unit Compressive Strength: Minimum 5,000 psi at 28 days.

C. Color and Finish: As selected by the architect from the manufacturers full range of color and finish products.

D. Cement: ASTM C150; use only one brand and type of cement.
   1. Use white cement where required to match approved sample.

E. Aggregates: Size, type and color to match approved sample; washed; from single source and of same color for entire job.

F. Water: Drinkable, free of foreign materials in amounts harmful to concrete and embedded steel.

G. Pigments and Admixtures: Of types and quantities to provide concrete mix necessary to match approved sample, and which will not be harmful to precast concrete, connectors, or adjacent materials.
   1. Pigments: Pure, non-fading mineral oxides conforming to ASTM C979, and designed and mixed to provide uniform color.

2.3 ACCESSORIES

A. Anchors, Connecting, and Supporting Devices: ASTM A36; provide ASTM A666 stainless steel at any areas where water might be carried over devices to face of precast.
   1. Finish of Steel Units: Galvanize exposed units per ASTM A153; paint non-exposed units with rust-inhibitive primer.

B. Bolts, Nuts and Washers: High strength steel type recommended for structural steel joints.

C. Grout: Non-metallic, pre-mixed, shrinkage resistant, non-corrosive, non-staining product containing selected silica sands, Portland cement, shrinkage compensating agents, plasticizing agents, and water reducing agents.

2.4 FABRICATION

A. Maintain plant records and quality control program during production of precast concrete units; make records available upon request.
   1. Conform to applicable requirements of PCI MNL 117.

B. Use rigid molds and forms and constructed of material that results in uniform finished products.

C. Establish concrete mix design by tests on trial batches to achieve specified strength and approved color and finish.
   1. Maintain water content as consistent as possible during manufacture.
   2. Mix in admixtures and pigments in accordance with manufacturer's recommendations.

D. Deposit and vibrate concrete to ensure proper consolidation, elimination of unintentional cold joints, and to minimize entrapped air on exposed surfaces.

E. Fabricate required connecting devices, plates, angles, inserts, bolts, accessories, and items fitted to steel framing members.

F. Fabricate to allow units to be securely held in place of final installation and adjusted prior to permanent locking in place.

G. Locate hoisting devices so they can be cut off and sealed weather-tight after units are erected.

H. Ensure reinforcing steel, anchors, inserts, plates, angles, and other cast-in items are sufficiently embedded and properly located.

I. Prime paint surfaces of connecting and supporting devices except those embedded in

concrete or requiring field welding.
1. Thoroughly clean surfaces of rust, scale, grease, and foreign matter prior to prime painting.

J. Fabricate precast units straight, smooth, and true to size and shape, with exposed edges and corners precise and square unless otherwise indicated.
1. Warped, cracked, broken, spalled, stained or otherwise defective architectural precast concrete will not be acceptable.

K. Cure units under near identical conditions to minimize appearance blemishes.

L. Finish: Provide light sandblast finish as approved by Architect.

M. Patching: Minor patching in plant may be accepted providing structural adequacy and appearance of finished units is not impaired.
1. Patches in exposed areas which are noticeable at a distance of 3'-0" or more shall be rejected.

2.5 SOURCE QUALITY CONTROL

A. Fabrication Tolerances: Design for and maintain following fabrication tolerances.
1. Thickness: Plus 1/4", minus 1/8".
2. Maximum Out-of-Square: 1/8" per 10'-0".
3. Maximum Bowing: Length of unit/360.
4. Location of Openings and Cast-In Items: Plus or minus 1/4".

B. Tests: Provide tests by independent firm appointed and paid for by manufacturer; submit name of firm to Architect for review.
1. Make water absorption test of coarse aggregates according to ASTM C127 and of fine aggregates according to ASTM C128.
2. Make one compression test at 28 days for each day's production.
   a. Provide two test specimens for each compression test.
   b. Obtain concrete for specimens from actual production batch.
   c. Test specimens: Minimum 4" concrete cube.
   d. Cure using same methods used for units, until units are stripped, then moist cure specimens until test.

PART 3 EXECUTION

3.1 PREPARATION

A. Deliver anchorage items to be embedded in other construction before start of such work; provide setting diagrams, templates, instructions and directions as required for installation.

3.2 INSTALLATION

A. Erect in accordance with manufacturer recommendations and installation instructions and approved shop drawings, without damage to shape or finish.
1. Conform to applicable requirements of referenced standards.

B. Provide for erection procedures, temporary bracing and induced loads during erection; maintain temporary bracing in place until final support is provided.

C. Erect level, plumb, square and true within tolerances specified in PCI MNL-117 and as specified;

align and maintain horizontal and vertical joints, as erection progresses.

D. Site Tolerances: In addition to tolerances specified in PCI MNL 117, maintain following minimum tolerances of installed architectural precast.
   1. Face Width of Joints: Maximum 3/16" plus or minus.
   2. Joint Taper: Maximum 1/40" per foot length, with maximum length of taper in one direction of 10 feet.
   3. Step in Face Alignment: Maximum 1/8" from one unit to adjacent unit.
   4. Jog in Edge Alignment: Maximum 1/8" from panel edge to adjacent panel edge.

3.3 REPAIR

A. Patching: Minor patching may be accepted providing structural adequacy and appearance of finished units is not impaired.
   1. Patches in exposed areas which are noticeable at a distance of 3'-0" or more shall be rejected.

3.4 FIELD QUALITY CONTROL

A. Conduct inspections, perform testing, and make repairs or replace unsatisfactory units.

3.5 CLEANING

A. Clean marks, debris and dirt from exposed surfaces.

END OF SECTION

SECTION 05 12 00

STRUCTURAL STEEL FRAMING

PART 1 GENERAL

1.1 DESCRIPTION

A. This Section describes the requirements for furnishing and installing structural steel. All steel members and connections shall be provided as shown on the drawings.

B. Materials and fabrication procedures are subject to inspection and tests in the mill, shop, and field conducted by a qualified inspection agency. Promptly remove and replace materials or fabricated components that do not comply.

C. Design of Members and Connections: Details are typical; similar details apply to similar conditions unless otherwise indicated. Verify dimensions at the site whenever possible without causing delays in the work. Notify the Architect whenever the design of members and connections is not clearly indicated.

1.2 RELATED WORK

A. Division 1 – General Requirements

B. Division 5 - Steel

1.3 REFERENCES

A. CBC Chapter 19

B. AISC 360 – Specifications for Structural Steel Buildings

C. AISC – Specification for Structural Joints Using High-Strength Bolts

D. AISC 303 – Code of Standard Practice for Steel Buildings and Bridges

1.4 SUBMITTALS

All submittals shall be submitted under Division 1 - General Requirements provisions.

A. Submittal No. 05 12 00A – Product Data: Not required.

B. Submittal No. 05 12 00B - Shop Drawings:
   1. Include details of cuts, connections, camber, holes, and other pertinent data. Indicate welds by standard AWS symbols and show each weld's size, length, and type.
   2. Furnish setting diagrams, templates, and directions for installing anchor bolts and other assemblies to be installed as work of other Sections.

C. Submittal No. 05 12 00C - Samples: Not required.

D. Submittal No. 05 12 00D - Test Reports:
   1. Furnish copies of material test reports and testing and observation reports for shop and

field bolted and welded connections. Include data on types of tests conducted and test results.

E. Submittal No. 05 12 00E – Welding Procedures:
1. Furnish copies of WPS for shop and field welded connections. Only submit welds that will be utilized on the project and include data on electrodes. Welds for non-structural steel shall be submitted under Section 05 50 00 Miscellaneous Steel Fabrication.
2. Group WPS into individual submittals under the following categories:
   a. Gravity Members – Welds for members supporting roof or floor framing.
   b. Lateral Force Resisting Systems – Welds for members part of the lateral force-resisting system (i.e., braced or moment frames).
   c. Demand Critical Welds – Welds identified as demand critical welds in the drawings.

1.5 QUALITY ASSURANCE

A. Codes and Standards: Comply with provisions of the following, except as otherwise indicated:
1. AISC "Code of Standard Practice for Steel Buildings and Bridges".
2. AISC "Specifications for Structural Steel Buildings" including "Commentary".
3. AWS D1.1 "Structural Welding Code - Steel".
4. ASTM A6 "General Requirements for Delivery of Rolled Steel Plates, Shapes, Sheet Piling and Bars for Structural Use".

B. Welding Qualifications: Before commencing welding, welding procedures, welding operations, and welders shall be qualified in accordance with AWS D1.1.

C. All testing and inspection shall be provided as outlined in the General Structural Notes of the construction drawing set by the Building Official and the CBC.

D. Conflicting requirements: In the event of a conflict between pertinent codes and regulations and the requirements of the referenced standards or these specifications, the more stringent provisions shall govern.

1.6 DELIVERY, STORAGE, AND HANDLING

A. Deliver materials to the site at intervals to ensure uninterrupted progress of the work.

B. Deliver anchor bolts and anchorage devices to be embedded in cast-in-place concrete or masonry promptly so as not to delay the work of others. Provide templates for the setting of anchor bolts.

C. Store materials to permit easy access for inspection and identification.
1. Keep structural steel members off the ground using pallets, platforms, or other supports.
2. Protect steel members and packaged materials from corrosion and deterioration.
3. Do not store materials on the structure in a manner that causes distortion or damage to members or supporting structures.

PART 2 PRODUCTS

2.1 MATERIALS

A. General: For fabrication of work that will be exposed to view, use only materials which are smooth and free of surface blemishes, including pitting, rust, scale, seam marks, roller marks, rolled trade names, and roughness. Remove blemishes by grinding or welding and

grinding before cleaning, treating, and applying surface finishes.

B. Channels, angles, plates, clips, and bearing assemblies, unless noted otherwise on the Drawings: ASTM A36.

C. Wide Flange and WT Shapes: ASTM A992.

D. Cold-Formed Steel Tubing: ASTM A500, Grade C.

E. Steel Pipe: ASTM A53, Type S, Grade B.
   1. Finish: Black, except where indicated to be galvanized.

F. Steel Castings: ASTM A27, Grade 65-35, medium-strength carbon steel.

G. Anchor Bolts: ASTM F1554 Grade 36, unless otherwise indicated.

H. Threaded Rod: A36 or F1554 Gr. 36, unless otherwise indicated.

I. Unfinished Threaded Fasteners: ASTM A307, Grade A, regular low-carbon steel bolts and nuts. Provide hexagonal heads and nuts for all connections unless otherwise indicated.

J. Headed Stud-Type Shear Connectors: ASTM A108, Grade 1015 or 1020, cold-finished carbon steel, dimensions complying with AISC Specifications.

K. High Strength Threaded Fasteners: Heavy hexagonal structural bolts, heavy hexagon nuts, and hardened washers. Provide quenched and tempered medium-carbon steel bolts, nuts, and washers, complying with ASTM A325.

L. Arc Welding Electrodes - E-70 Series, low hydrogen, conforming to AWS A5.1. 1/8 inch maximum diameter for welded beam-column joints.

M. Flux Core Arc Welding Wire - E-7 Series. 5/64 inch maximum diameter for welded beam-column joints.

N. Structural Steel Primer Paint: VOC compliant rust-inhibitive primer; Tnemec Series 115 Enviro-Prime or approved equal acrylic emulsion primer. (Exterior exposed-to-view structural steel to be field-painted shall be primed with Tnemec 66-1211 Epoxy-Polyamide or approved equal compatible with final finish coat specified in Division 9 - Finishes.)

2.2 FABRICATION

A. Fabricate all structural steel in strict accordance with the drawings, reviewed shop drawings, CBC Chapter 22 , and the referenced standards.

B. Before starting work, secure field measurements pertaining to or affecting the Work of this Section.

C. Before being fabricated or worked, the material shall be thoroughly wire brushed, cleaned of scale and rust, and straightened by methods that will not injure the steel.

D. After punching or working component parts of a member, twists or bends shall be removed before the parts are assembled. When erected, finished members shall be free from twists, bends, and open joints. Members and sections shall be of sizes, weights, shapes, and arrangements indicated, closely fitted, and finished true to line and in the precise position to allow accurate erection and proper joining of parts in the field. Light drifting to draw parts

together will be acceptable, but drifting to enlarge holes will not be allowed.

E. Gas Cutting - A cutting torch will be allowed where the cut metal does not carry stress during the operation, and stresses will not be transmitted through a flame-cut surface. Gas cuts shall be smooth and regular in contour. 1/8 inch shall be deducted from the width of the gas cut edges to determine the effective width of cut members. The radius or re-entrant gas cut fillets shall be as large as practicable but in no case less than 1 inch.

F. Punching and Drilling - Material may be punched 1/16 inch larger than the nominal diameter of the bolts, wherever the thickness of the metal is equal to or less than the diameter of the bolts plus 1/8 inch. Where the metal is thicker than the diameter of the bolts plus 1/8 inch, the holes shall be drilled or sub-punched and reamed. The die for sub-punched holes, and the drill for sub-drilled holes shall be 1/16 inch smaller than the nominal diameter of the bolt accommodated. Finished holes shall be precisely located to ensure the passage of bolts through assembled materials without drifting. Enlargement of holes necessary to receive bolts shall be done by reaming. Poor matching of holes will be a sufficient cause for rejection.

G. FCAW process. Operators shall be thoroughly trained and experienced in welding structures, capable of making uniformly reliable butt and fillet welds in flat, vertical, and overhead positions, and producing neat, consistent work in actual operation. Operators shall be certified as prescribed by the Standard Qualifications Procedure of the American Welding Society. Acceptance of an FCAW process shall require bend testing of sample welds. Perform welding operations as follows:
   1. STORAGE AND CARE OF ELECTRODES: Comply with the provisions of AWS D1.1 Section 4.5.2.
   2. PREPARATION: Surfaces to be welded shall be cleaned of paint, grease, loose scale, and foreign matter. Welds shall be cleaned after each pass and burned, or flame-cut edges shall be chipped clean before welds are deposited thereon.
   4. CHARACTERISTICS OF WELDS: After being deposited, welds shall be brushed with wire brushes and exhibit uniform section, smoothness of welded metal, feather edges without undercuts or overlays, and freedom from porosity and visual defects. Visual observation at the edges and ends of fillets and butt joints welds shall indicate good fusion with penetration into the base metal.
   5. CONDITIONS: During assembling and welding, the component parts of a built-up member shall be held with sufficient clamps or other adequate means to keep parts straight and in close contact. In welding, precautions shall be taken to minimize "lock-up" stress and distortion due to heat. No welding shall be done in the wind until adequate wind protection has been provided and set up. Welds or parts of defective welds shall be cut out and replaced with proper workmanship.
   6. BUTT WELDS: The maximum space between pieces or members to be butt welded shall not exceed 1/4 inch. Pieces or members up to 3/8 inch in thickness shall be beveled to form a single or double "vee" before being welded. Those over 3/8 inch in thickness shall be beveled to form a double "vee" whenever possible.
   7. FILLET WELDS: Shall be laid in positions indicated and to sizes shown. Weld shall meet the AWS acceptable configuration profiles. The maximum space between pieces or members to be fillet welded shall not exceed 1/16 inch.

2.3 SHOP PAINTING

A. General: Shop paint structural steel, except members to be embedded in concrete or mortar. Paint embedded steel partially exposed on exposed portions and initial 2-inches of embedded areas only.
   1. Do not paint surfaces that are to be field welded or high-strength bolted with slip-critical connections.

2. Do not paint surfaces that are to receive sprayed-on fireproofing.
3. Apply two coats of paint to surfaces inaccessible after assembly or erection.

B. Surface Preparation: After inspection and before shipping, clean the steel to be painted. Remove loose rust, mill scale, and spatter slag or flux deposits. Clean steel to be field-painted in accordance with SSPC SP-6. Clean steel concealed in finish work in accordance with SP-3.

C. Painting: Immediately after surface preparation, apply primer at a dry film thickness of not less than 1.5-mils, per the manufacturer's instructions. Use painting methods that fully cover joints, corners, edges, and exposed surfaces. Apply Tnemec 66-1211 primer at a dry film thickness of not less than 3.0-mils per the manufacturer's instructions.

2.4 SOURCE QUALITY CONTROL

A. The Owner's Testing Laboratory will provide inspection of welding and testing of material as outlined in the General Structural Notes of the construction drawing set, by the Building Official and the CBC.

PART 3 EXECUTION

3.1 ERECTION

A. Surveys: Check elevations of concrete and masonry bearing surfaces and locations of anchor bolts and similar devices before erection. Do not proceed with erection until corrections have been made.

B. Structural steel shall be erected with professional riggers and shall be carefully planned and laid out so that a minimum of cutting will be necessary. The work shall be erected plumb, square, and true to line and level and in precise position as indicated. Temporary bracing and guys shall be introduced wherever necessary to provide for loads and stresses to which the structure may be subjected, including those due to erection equipment and their operation. If necessary, they shall be left in place to safeguard all parts of the work. Conduct erection procedures as follows:
1. SEQUENCE OF WORK: The erection of structural steelwork shall be carried out in proper sequence with the other trades' work and shall be framed, bedded, and anchored to the concrete and masonry in strict accordance with the detailed drawings and accepted setting diagrams.
2. TEMPORARY BOLTING: As erection progresses, the work shall be securely bolted up as necessary to maintain the steel in the proper position while field bolting and welding is done and to take care of the dead, wind, and erection loads. No field welding or bolting shall be done until the work has been properly aligned, plumbed, and leveled.
3. TOLERANCES: Erect structural steel within the cumulative total tolerance established by adding rolling tolerances, fabricating tolerances, and erection tolerances described in the Code of Standard Practice for Steel Buildings and Bridges unless otherwise noted on the plan.

C. Setting Bases and Bearing Plates:
1. Clean concrete and masonry-bearing surfaces of bond-reducing materials and roughen them to improve the surface bond.
2. Clean the bottom surfaces of the base and bearing plates.
3. Set loose and attached base plates and bearing plates for structural members on wedges or other adjusting devices.
4. Tighten anchor bolts after supported members have been positioned and plumbed. Do not remove wedges or shims; cut off flush with the edge of the base or bearing plate

before grouting.
5. Grout solidly between bearing surfaces and bases or plates, filling voids. Finish exposed surfaces, protect installed materials, and allow them to dry.

D. Field Assembly:
1. Set structural frames to lines and elevations indicated. Align and adjust members before permanently fastening.
2. Clean bearing surfaces and other surfaces in permanent contact before assembly.
3. Adjust for discrepancies in elevations and alignment.
4. Level and plumb individual members within specified AISC tolerances. Establish measurements on the mean operating temperature of the structure. Make allowances for differences between the temperature at the time of erection and the mean temperature of the structure when completed.

E. HIGH-STRENGTH BOLTS
1. High-strength bolts shall be installed, tightened, and checked in strict accordance with ASTM A-325. Contact surfaces or members to be bolted shall not be painted. High-strength bolts at welded moment connections shall be tensioned after welding is complete. Only high-strength bolts at welded moment connections require tension test verification.
2. All high-strength bolts shall be installed in accordance with the Specifications for Structural Joints using ASTM A-325 or A-490 Bolts, as accepted by the Research Council on Structural Connections of the Engineering Foundation and endorsed by the American Institute of Steel Construction.

F. Backer bars and run-off tabs shall be removed from beam flange full penetration welds, and the root weld tested for imperfections, back gouged, and re-welded if required.

G. Comply with AISC Specifications for bearing, adequacy of temporary connections, alignment, and paint removal on surfaces adjacent to field welds.

H. Do not enlarge unfair holes in members by burning or using drift pins. Ream holes requiring enlargement to admit bolts.

I. Touch-Up Painting:
1. Clean field welds, bolted connections, and abraded areas of shop paint.
2. Apply paint by brush or spray to exposed areas using the same material and thickness for shop painting.
3. Apply by brush or spray a minimum dry film thickness of 1.5-mils.

3.2 FIELD QUALITY CONTROL

A. The Owner's Testing Laboratory will:
1. Inspect and test welding as specified in 2.4 SOURCE QUALITY CONTROL.
2. Test base metals as specified in 2.4 SOURCE QUALITY CONTROL.
3. Inspect and test high-strength bolting as specified in 2.4 SOURCE QUALITY CONTROL.

B. Contractor shall make corrections to rejected welds in accordance with AWS D1.1.

END OF SECTION

SECTION 05 30 00

METAL DECKING

PART 1 GENERAL

1.1 DESCRIPTION

A. This Section describes the requirements for furnishing and installing metal decking.

1.2 RELATED WORK

A. Division 1 – General Requirements

B. Division 5 – Steel

1.3 REFERENCES

A. ASTM A36 – Specification for Carbon Structural Steel

B. ASTM A653 – Specification for Steel Sheet, Zinc-Coated (Galvanized) of Zinc-Iron Alloy-Coated (Galvannealed) by the Hot-Dip Process

C. ASTM A924 – Specification for General Requirements for Steel Sheet, Metallic-Coated by the Hot-Dip Process

D. ASTM A1008 – Specification for Steel, Sheet, Cold-Rolled, Carbon, Structural, High-Strength Low-Alloy with Improved Formability, Solution Hardened, and Bake Hardenable

E. AWS D1.3 – Structural Welding Specification

1.4 SUBMITTALS

All submittals shall be submitted under Division 1 – General Requirements provisions.

A. Submittal No. 05 30 00A (#) – Product Data: Not required.

B. Submittal No. 05 30 00B (#) – Shop Drawings:
   1. Detailed drawings showing the layout of deck panels, anchorage details, and conditions requiring closure panels, supplementary framing, cut openings, special jointing, and other accessories.

C. Submittal No. 05 30 00C (#) – Samples: Not required.

1.5 QUALITY CONTROL

A. Welding Qualifications: Qualify welding processes and operators in accordance with AWS "Standard Qualification Procedure." Provide certification that welders employed in the Work have satisfactorily passed AWS D1.3 qualification tests. If re-certification of welders is required, re-testing will be Contractor's responsibility.

1.6 PRODUCT DELIVERY, STORAGE, AND HANDLING

A. Deliver, handle, and store metal decking to prevent damage to and distortion of the units

B. Do not permit metal to come into contact with the ground

C. Protect metal decking from moisture

D. Do not overload decking during construction, and do not use decking for storage or working platforms before welding in position.

PART 2 PRODUCTS

2.1 MATERIALS

A. Steel for Galvanized Metal Deck Units: ASTM A653, Designation SS, minimum Grade 33; ASTM A924 with a galvanized finish, minimum Grade C; or ASTM A1008, Designation SS, Grade 33 minimum with a painted, primer-painted, or mill finish. The minimum yield shall be 38,000 psi and a minimum tensile strength of 52,000 psi. Unless otherwise noted, all sheets shall receive a metal protective coating of zinc conforming to ASTM A653 before forming.

B. Miscellaneous Steel Shapes: ASTM A36.

C. Sheet Metal Accessories: ASTM A653, commercial quality, galvanized.

D. Galvanizing: ASTM A653.

E. Galvanizing Repair Paint: High zinc dust content paint for the repair of damaged galvanized surfaces.

F. Flexible Closure Strips: Manufacturer's standard vulcanized, closed-cell, synthetic rubber.

G. Acoustic Sound Barrier Closures: Manufacturer's standard mineral fiber closures.

H. Welding Materials: AWS D1.3 E-70XX electrodes having a minimum yield stress of 70,000 psi.

2.2 FABRICATION

A. General: Form deck units in lengths to span 2 or more supports, with flush, telescoped, or nested 2-inch end laps and interlocking or nesting side laps unless otherwise indicated.
   1. Coordinate with other Work supporting, contacting, or adjoining metal decking and verify cutting, fitting, and attaching requirements.
   2. Verify dimensions and locations at the site.

B. Fabrication Requirements:
   1. Fabricate in accordance with SDI unless specifically noted otherwise.
   2. Shop or field cut units to fit around openings, along the building perimeter, and around columns.
   3. Provide continuous lengths for not less than two spans and to rest on a minimum of three supports where structural steel layout permits. Cantilevered units shall have the cantilever and at least the adjacent span in one length.

2.3 FINISHES

A. Galvanizing: Where items have not been fabricated from galvanized steel sheets, hot dip

galvanize after fabrication in accordance with ASTM A153 and A123, as applicable.

PART 3 EXECUTION

3.1 INSPECTION

A. Examine the areas and conditions under which metal decking is to be installed. Do not proceed with the Work until unsatisfactory conditions have been corrected.

B. If the supporting members are not properly aligned or sufficiently level to permit proper bearing of the steel deck units, notify the Architect for corrective action.

3.2 INSTALLATION

A. General: Install deck units and accessories per the manufacturer's instructions, final shop drawings, and as specified.
   1. Place on supporting steel framework and adjust to final position with ends accurately aligned and bearing on supporting members before being permanently fastened. Do not stretch or contract side-lap interlocks.
   2. Place in straight alignment for the entire length of the run, with close alignment between cells at the ends of abutting units.
   3. Place flat and square, secured to adjacent framing without warp or excessive deflection.
   4. Coordinate and cooperate with the structural steel erector in locating decking bundles to prevent the overloading of structural members.
   5. Do not use floor deck units for storage or working platforms until permanently secured.

B. Fastening Deck Units:
   1. Fasten deck units to steel supporting members by fasteners or welds as indicated. Where two units abut, fasten each unit to the steel framing. Welds shall be free of sharp points or edges.
   2. Comply with AWS requirements and procedures for manual, shielded, metal arc welding; the appearance and quality of welds; and the methods used in correcting welding work.

C. Cutting and Fitting: Cut and fit deck units and accessories around other work projecting through or adjacent to the decking.

D. Reinforcement at Openings: Provide additional metal reinforcement and closure pieces as required for strength, continuity, and support of other work.

E. Touch-Up Painting: After installation, wire brush, clean, and paint scarred areas, welds, and rust spots on the top and bottom surfaces of decking units and supporting steel members.
   1. Touch up galvanized surfaces with galvanizing repair paint applied per the manufacturer's instructions.
   2. In areas where shop-painted surfaces are exposed, apply touch-up paint to blend into adjacent surfaces.

3.3 FIELD QUALITY CONTROL

A. The Owner's Testing Laboratory will inspect deck welding as required by the General Structural Notes of the construction drawing set, by the Building Official the CBC and AWS D1.3. The inspection shall check welder qualification, welding equipment, and weld quality.

END OF SECTION

SECTION 05 50 00

METAL FABRICATIONS

PART 1 GENERAL

1.1 DESCRIPTION

A. This Section describes the requirements for furnishing and installing metal fabrications made from steel shapes, plates, bars, strips, tubes, pipes and castings not a part of structural steel or specified in other Sections.

1.2 SYSTEM PERFORMANCE REQUIREMENTS

A. Railings: Design, engineer, fabricate and install railings to withstand the following structural loads:
   1. Top Rail of Railing System: Capable of withstanding a concentrated load of 300-pounds applied at any point and a uniform load of 50-pounds per linear foot applied at any direction.
   2. Railings shall comply with California Building Code requirements.

1.3 SUBMITTALS

A. Product Data:
   1. Manufacturer's specifications, anchor details and installation instructions, including paint products and grout.

B. Shop Drawings:
   1. Include plans, elevations and details of metal fabrications and their connections. Show anchorage and accessory items.

1.4 QUALITY ASSURANCE

A. Fabricator Qualifications: Firm experienced in successfully producing metal fabrications similar to that indicated for this Project, with sufficient production capacity to produce required units without causing delay in the work.

B. Welding Qualifications: Qualify welding processes and welding operators in accordance with AWS D1.1, D1.3, and D1.2 as applicable. Certify that each welder has satisfactorily passed AWS qualification tests for welding processes involved.

1.5 PROJECT CONDITIONS

A. Field Measurements: Check actual locations of walls and other construction to which metal fabrications must fit, by accurate field measurements before fabrication. Show recorded measurements on shop drawings. Coordinate fabrication schedule to avoid delay of work.

1.6 SEQUENCING AND SCHEDULING

A. Painting: Items specified in this Section as having a shop applied prime coat will be job painted, unless otherwise noted.

B. Furnish templates for anchors and bolt installation by other Sections.

PART 2 PRODUCTS

2.1 MATERIALS

A. General: For fabrication of metal work, which will be exposed to view, use only materials which are smooth and free of surface blemishes including pitting, seam marks, roller marks, rolled trade names and roughness.

B. Wide Flange Steel Shapes: ASTM A992

C. Steel Plates, Shapes and Bars: ASTM A36

D. Steel Tubing: Cold formed, ASTM A500; or hot rolled, ASTM A501

E. Structural Steel Sheet: Hot rolled, ASTM A1011; or cold rolled ASTM A1008

F. Galvanized Structural Steel Sheet: ASTM A653

G. Steel Pipe: ASTM A53; type and grade selected by fabricator; black finish unless galvanizing is indicated or specified; standard weight, schedule 40, unless otherwise indicated

H. Gray Iron Castings: ASTM A48, Class 30

I. Wire Mesh: McNichols.

J. Brackets, Flanges and Anchors: Cast or formed metal of same type material and finish as supported rails, unless otherwise indicated

K. Concrete Inserts: Threaded or wedge type; galvanized ferrous castings, either malleable iron, ASTM A47, or cast steel, ASTM A27. Provide bolts, washers and shims as required, hot dip galvanized, ASTM A153.

L. Grout:
1. Metallic Non-Shrink Grout: Pre mixed, factory packaged, ferrous aggregate grout
2. Non Shrink Non Metallic Grout: Pre mixed, factory packaged, non-staining, non-corrosive, non-gaseous grout.

M. Fasteners: Steel fasteners, galvanized in accordance with ASTM A153, selected by fabricator

N. Paint:
1. Metal Primer: SSPC 20, Type 2
   a. Exterior Exposure: Tnemec 90-97 Tnemec Zinc or approved equal
   b. Interior Exposure: Tnemec 18 Enviro-Prime acrylic emulsion rust-inhibitive primer or approved equal
   c. Exposed to view items to be field painted shall be primed with a primer compatible with final finish coats specified in Section 09 90 00.
2. Galvanizing Repair Paint: High zinc dust content paint for re-galvanizing welds in galvanized steel; Rust Oleum Corp. "Zinc Rich Cold Galvanizing Compound", Tnemec 90 93, ZRC Chemical Products Div. of Norfold Corp. "ZRC Cold Galvanizing Compound" or approved equal.

2.2 FABRICATION, GENERAL

A. Workmanship:
1. Use materials of size and thickness indicated or required to produce strength and durability in finished product for use intended.
2. Work to dimensions indicated,
3. Form exposed work true to line and level with accurate angles and surfaces and straight, sharp edges.
4. Ease exposed edges to a radius of approximately 1/32 inch, unless otherwise indicated.
5. Form bent metal corners to smallest radius possible without causing grain separation or otherwise impairing work.
6. Weld corners and seams continuously, complying with AWS recommendations. At exposed connections, grind exposed welds smooth and flush to match and blend with adjoining surfaces. Welds shall be imperceptible in the finished work.
7. Form exposed connections with hairline joints, flush and smooth, using concealed fasteners wherever possible. Use Phillips flat head countersunk screws or bolts for exposed fasteners, unless tamperproof security screws are indicated.
8. Cut, reinforce, drill and tap miscellaneous metal work as indicated to receive finish hardware and similar items.

B. Galvanizing: Provide zinc coating for items indicated or specified to be galvanized, as follows:
1. ASTM A153 for galvanizing iron and steel hardware.
2. ASTM A123 for galvanizing both fabricated and un-fabricated iron and steel products made of uncoated rolled, pressed, and forged shapes, plates, bars, and strip 0.0299-inch thick and heavier.

C. Fabricate joints exposed to the weather to exclude water or provide weep holes.

D. Shop Painting:
1. Shop paint miscellaneous metal work, except members or portions of members to be embedded in concrete or masonry, surfaces and edges to be field welded, and galvanized surfaces.
2. Remove scale, rust and other deleterious materials before applying shop coat. Clean off heavy rust and loose mill scale in accordance with SSPC SP 2, SP 3, or SP 7.
3. Remove oil, grease and similar contaminants in accordance with SP 1.
4. Brush or spray on primer in accordance with manufacturer's instructions, at a rate of 2.0 mils thickness for each coat.
5. Apply one shop coat to fabricated metal items, except apply 2 coats to inaccessible surfaces after assembly or erection. Change color of second coat to distinguish from the first.
6. Primer on exposed to view items to be field painted shall be smooth and suitable for application of final finish coats specified in Section 09 90 00.
7. Apply a heavy coat of bituminous paint, compounded for application in 30 mil coat, to metal surfaces in contact with concrete, masonry and dissimilar metals. Do not apply on exposed surfaces.

2.3 MISCELLANEOUS METAL FABRICATIONS

A. Loose Bearing and Leveling Plates: Provide for steel items bearing on masonry or concrete construction, made flat, free from warps or twists, and of required thickness and bearing area. Drill to receive anchor bolts and for grouting as required. Galvanize after fabrication.

B. Miscellaneous Framing and Supports:
1. Provide miscellaneous framing and supports not a part of structural steel framework, as

required to complete work.
2. Fabricate to sizes, shapes and profiles shown or required.
3. Fabricate from structural steel shapes and plates and steel bars of welded construction using mitered joints for field connection.
4. Cut, drill and tap units to receive hardware and similar items.
5. Furnish integrally welded anchors for casting into concrete or building into masonry.
6. Finish: Galvanize exterior frames and supports, shop prime interior frames and supports.

C. Steel Pipe or Tube Railings: Fabricate to design, dimensions and details indicated.
1. Interconnect railing members by butt welding or welding with internal connectors.
2. Provide coped joints at tee and cross sections.
3. Form simple and compound curves by bending pipe or tubing in jigs to produce uniform curvature for each repetitive configuration. Maintain cylindrical cross section of pipe or tube throughout entire bend without buckling, twisting or deforming exposed surfaces.
4. Close exposed ends of pipe by welding 3/16 inch steel plate in place or by using prefabricated fittings.
5. Flanges, Fittings and Anchors: Provide end closures, flanges, miscellaneous fittings and anchors for interconnections of pipe or tubing and attachment of railings to other work. Furnish inserts and other anchorage devices for connecting to concrete or masonry.
6. Pipe Sleeves:
   a. Provide galvanized pipe sleeves not less than 6 inches long with an inside diameter not less than 1/2 inch greater than the outside diameter of pipe or tube.
   b. Provide steel plate closure welded to bottom of sleeve, width and length not less than 1 inch greater than outside diameter of sleeve.
   c. Provide friction fit, removable covers designed to keep sleeves clean and hold top edge of sleeve 1/2 inch below finished surface of concrete.
7. Finish: Galvanize exterior steel railings, including pipe or tubing, fittings, brackets, fasteners, and other ferrous components. Provide black steel pipe or tubing for interior railings.

D. Bollards: Fabricate bollards from galvanized steel pipe of diameter and height indicated. Embed in concrete footings, fill with concrete and close top end by welding a 1/4 inch steel plate in place or provide a smooth concrete domed cap.

PART 3 EXECUTION

3.1 PREPARATION

A. Coordinate and furnish anchorages, setting drawings, diagrams, templates, instructions, and directions for installation of anchorages, such as concrete inserts, sleeves, anchor bolts and miscellaneous items having integral anchors.

3.2 INSTALLATION

A. General:
1. Fastening to In Place Construction: Provide threaded fasteners for concrete and masonry inserts, toggle bolts, through bolts, lag bolts, wood screws and other connectors as required
2. Cutting, Fitting and Placement:
   a. Perform cutting, drilling and fitting required for installation of miscellaneous metal fabrications.
   b. Set work accurately in location, alignment and elevation, plumb, level, true and free of rack, measured from established lines and levels.
   c. Provide temporary bracing or anchors in formwork for items to be built into

concrete, masonry or similar construction.

3. Fit exposed connections together forming tight hairline joints.
    a. Weld connections not shop welded.
    b. Grind exposed joints smooth and imperceptible, and touch up shop paint coat.
    c. Do not weld, cut or abrade the surfaces of exterior units which have been hot dip galvanized after fabrication, and intended for bolted or screwed field connections.
4. Field Welding: Comply with AWS for procedures of manual shielded metal arc welding, appearance and quality of welds, and methods used in correcting welding work.
5. Install prefabricated items in accordance with manufacturer's instructions.

B. Setting Loose Plates:
1. Clean concrete and masonry bearing surfaces of bond reducing materials, and roughen to improve surface bond. Clean bottom surface of bearing plates.
2. Set loose leveling and bearing plates on wedges, or other adjustable devices.
3. Tighten anchor bolts after the bearing members have been positioned and plumbed.
4. Cut off protruding ends of wedges flush with the edge of the bearing plate before packing with grout.
5. Use metallic non shrink grout in concealed locations where not exposed to moisture; use non metallic non shrink grout in exposed locations.
6. Pack grout solidly between bearing surfaces and plates to ensure no voids remain.

C. Gratings:
1. Weld non removable units to supporting members or framework.
2. Secure removable units to supporting members or framework with galvanized machine screws, or manufacturer's standard saddle or clip units.

D. Steel Pipe or Tube Railings:
1. Adjust railings prior to anchoring to ensure matching alignment at abutting joints.
2. Space posts as indicated.
3. Plumb posts in each direction.
4. Anchor posts in concrete with pipe sleeves preset and anchored into concrete. After posts are inserted in sleeves, fill annular space between post and sleeve solid with non-shrink, non-metallic grout mixed and placed to comply with grout manufacturer's directions.
5. Anchor posts to steel with steel oval flanges, angle type or floor type as required by conditions, welded to posts and bolted to steel supporting members.
6. Provide removable railing sections where indicated. Furnish slip fit metal socket or sleeve for casting into concrete. Locate sleeves to match post spacing.
7. Expansion Joints: Provide at intervals not exceeding 40 feet. Provide slip joint with internal sleeve extending 2 inches beyond joint on either side; fasten internal sleeve securely to one side; locate joint within 6 inches of posts.

E. Bollards: Anchor bollards in concrete with preset pipe sleeves. After bollards have been inserted into sleeves, fill annular space between bollard and sleeve solid with non-shrink, nonmetallic grout.

3.3 ADJUST AND CLEAN

A. Touch-Up Painting: Clean field welds, bolted connections, and abraded areas of shop paint, and paint exposed areas with same material used for shop painting. Apply by brush or spray to provide a minimum dry film thickness of 2.0 mils.

B. Galvanized Surfaces: Clean field welds, bolted connections and abraded areas and spot

prime with specified primer applied to a minimum dry film thickness of 2.5 mils.

3.4 SCHEDULE

A. Provide and install items listed in Schedule and shown on Drawings with anchorage and attachments necessary for installation.

B. The Schedule is a list of principal items only. Refer to Drawing details for items not specifically scheduled.
   1. Downspouts.
   2. Steel Handrails.

END OF SECTION

SECTION 06 10 00

ROUGH CARPENTRY

PART 1 GENERAL

1.1 WORK INCLUDED

A. Structural and non-structural framing and sheathing.

B. Miscellaneous concealed and exterior lumber and sheet materials as shown or required.

C. Roof curbs and cants.

D. Blocking in wall and roof openings.

E. Concealed wood blocking for support of washroom accessories and wall cabinets.

F. Wood Blocking.

G. Treatment of wood members where required.

1.2 RELATED WORK

A. Division 1 - General Requirements

B. Division 6 - Wood, Plastics and Composites

1.3 REFERENCE STANDARDS

A. AWC National Design Specification for Wood Construction

B. WCLIB - West Coast Lumber Inspection Bureau: Standard Grading Rules for West Coast Lumber.

C. WWPA - Western Wood Products Association.

D. ASTM E84 - Fire Test.

E. FS TT-W-571 - Wood Preservation: Treating Practices.

F. California Building Code Title 24, Chapter 23.

G. AWPA - American Wood Protection Association: Book of Standards.

H. ASTM f1667 – Common Wire Nails.

1.4 QUALITY ASSURANCE

A. Lumber to have visible grade stamp of an agency certified by ALSC – American Lumber Standards Committee.

B. Provide written certification stating that materials provided meet specified requirements, including but not limited to their compliance with referenced standards relative to:
   1. Grade mark for the use intended
   2. Preservative treatment
   3. Fire retardant treatment

1.5 DELIVERY, STORAGE, AND HANDLING

A. Protect materials from the weather while in transit. Place under cover and protect from weather immediately upon delivery.

B. Store flat, off the floor, in a well-ventilated area where there will be no great variations in heat and humidity.

C. All pieces of lumber shall be grade stamped with WCLIB or WWPA grade stamp.

1.6 WARRANTY

A. Warrant the Work specified herein for two (2) years against becoming unserviceable or causing an objectionable appearance resulting from defects in materials and workmanship.

B. Warrant that products comply with the Contract Documents and local use restrictions and are compatible with adjoining materials, substrates, and other installation conditions.

C. Defects shall include, but not be limited to:
   1. Buckling or warping of surfaces
   2. Loose or missing parts
   3. Faulty installation, attachment, or alignment
   4. Deterioration due to lack or loss of preservative treatment

PART 2 PRODUCTS

2.1 LUMBER

A. Lumber Species and Materials: Framing Lumber: Shall be Douglas Fir - Larch, unless noted otherwise, and shall comply with the grading rules of WWPA or WCLIB. All lumber shall be stamped as to grade by an approved grading agency. End-jointed lumber shall not be used. All structural wood members with the least dimension of 2 1/2" or greater shall be free of heart center. All sides surfaced. Grades as follows unless otherwise noted on Drawings:

	USE Grade	Max Moisture Content at Time of Installation
1-inch boards	“Construction”	19%
Beams & Headers	No. 1	19%
Roof & Ceiling Joists	No. 1	19%
Studs, Sills, Plates	No. 1	19%
Posts & Timbers	No. 1	19%
Miscellaneous Blocking & Framing Not Noted	No. 1	19%

B. Preservative Treated Wood Materials: Pressure-treated in accordance with Standard Specifications of AWPA for treating structural timbers and FS TT-W-571.

C. Fire-Retardant Treated Wood Materials: Chemically treated and pressure impregnated;

capable of providing a maximum flame spread rating of 25 when tested in accordance with ASTM E84; manufactured by Koppers Company, Inc., or equivalent.

2.2 ACCESSORIES

A. Furnish and install all connecting hardware indicated on the Drawings specified herein or required to complete the work.

B. Materials:
1. Nails, Screws, Bolts, and Fasteners: Hot-dipped galvanized steel for exterior, high humidity, and treated wood locations; plain finish elsewhere; size and type to suit the condition.
2. Nails for light gauge metal connectors: Common wire nails, sizes as indicated or as specified by the metal connector manufacturer.
3. Screws: Standard domestic manufacturer, bright steel - galvanized for exterior use. Brass, bronze, aluminum, or stainless when used to fasten items made of those metals.
4. Screws: For attaching interior trim and finish to drywall partitions, use Type S, self-drilling, self-tapping anodized steel drywall screws of indicated lengths.
5. Bolts: ASTM A307 machine bolts with standard hex nuts and steel plate or cut washers or carriage bolts with standard hex nuts and cut washers as indicated. Bolts, nuts, and washers wholly or partially exposed on the exterior shall be galvanized. Sill plate anchor bolts shall use 3" x 3" x 0.229" Plate Washers.
6. Steel Plates and Angles: ASTM A36
7. Lag Screws, Shear Plates, and Split Ring Connectors: ANSI ASME B18.2.1
8. Framing Anchors, Joist Hangers, Etc: As made by Simpson Company and indicated on drawings or equivalent devices as approved by Architect. All framing connectors and joist hangers in contact with preservative-treated wood shall be coated to meet the requirements of CBC Section 2304.10.6.1. Connectors in contact with preservative-treated wood should have a minimum coating meeting the connector manufacturer's recommendations based on the type of preservative treatment used. At outdoor installations, in the absence of the manufacturer's recommendations, the connectors in contact with preservative-treated wood shall have a minimum coating meeting ASTM A653, type G185, per the CBC.
9. Power Driven Inserts: "Hilti" or as approved by Architect; install as per manufacturer's directions.
10. Miscellaneous Clips, Steel Assemblies: As per ASTM A36.
11. Provide Post-Installed Concrete Anchors (i.e., Hilti Kwik Bolt TZ2) as indicated on the plan in concrete. Pull or torque test as indicated on the CBC and per table in General Structural Notes of construction drawing set.
12. Fasteners used in Fire Retardant Protected lumber and sheathing shall be coated in compliance with the requirements of the fire-retardant treatment’s engineering evaluation report.

2.3 BUILDING PAPER

A. Two (2) layers of 15 lb. felt

PART 3 EXECUTION

3.1 SITE TREATMENT

A. Field apply a compatible preservative or fire-retardant treatment, as applicable, to site-sawn ends of treated members per the manufacturer's recommendations. Allow treatment to cure

before placing members.

B. Locations requiring preservative treatment:
   1. Sill Plates for wood framing in contact with concrete or masonry.
   2. Blocking or grounds in contact with concrete or masonry.
   3. Blocking or grounds concealed in construction in such a manner as to prevent exposure to circulating air.

C. Locations requiring fire retardant treatment:
   1. Concealed backing and blocking within partition or ceiling construction.
   2. Other interior locations as shown or required by code.

3.2 SELECTION AND USE OF LUMBER

A. Examine each piece of lumber separately. Select for strength, warp, and appearance, using the best pieces for the most demanding purposes.

B. Discard inferior portions of members where shorter pieces are required.

3.3 INSTALLATION

A. Execute carpentry Work carefully with neat cuts and close joints. Fit members to give firm seating and bearing.

B. Place members true to lines and levels. Secure rigidly in place.

C. Construct continuous members with pieces of the longest possible lengths.

D. Install members where indicated or needed to provide proper nailing, furring, or bracing. Provide all blocking as required to hold Work in the proper position.

E. Bore bolt holes only slightly larger than the size of the bolts. Provide washers for all bolts where heads or nuts bear on wood. Where required, countersink heads, nuts, and washers.

F. Plywood Sheathing: Install plywood roof sheathing and subflooring with long dimension perpendicular to joints.

G. Fire Blocking: Provide in accordance with CBC Section 718.

3.4 FRAMING

A. General: Install all wood framing making proper provisions for work of other trades. Do all cutting of wood required to accommodate plumbing, heating and ventilating, electrical and other trades. Fit neatly around all exposed items, such as outlet boxes, conduits, pipes, and ducts.

B. Exterior Base Plates or Bearing or Sheathed Wall Sills Resting on Concrete: Size all plates or sills and set level and true to line. Bolt down with bolts of size, length and spacing indicated, with a bolt four to twelve inches from the end of any piece. Each piece shall receive at least two bolts.

C. Rough Framing: Fit closely; set accurately to required lines and levels and secure rigidly in place. Set horizontal and inclined members with the crown edge up. Do not cut, notch, or bore structural members without specific approval. Reinforce cut members as directed. Bolt, nail, and spike thoroughly with not less than the sizes and quantities indicated. Structural

members shall provide full contact at all bearing surfaces. Joists shall be spliced over bearings unless shown otherwise.

D. Studs: Make walls and partitions of nominal 2x4, 2x6, 4x6, 2x8, or 4x8 studs, 16 inches on center, unless otherwise indicated or required to be larger to accommodate mechanical or electrical equipment, piping, and fixtures or the fixtures or equipment of any other trade. Unless otherwise indicated, all panels, valve covers, cleanouts, devices, access doors, recessed cabinet boxes, etc., shall be mounted flush with the adjacent wall surface. When any such item is of a depth where it is not practical to use solid studding to the full thickness of the wall, the wall shall be furred. When furring is required, it shall extend the full width of the room on the wall in which it occurs and from floor to roof or ceiling joists. The studs comprising all interior partitions and the wall material affixed to them shall extend from floor to ceiling joist framing except as otherwise indicated. Staggered stud walls shall be constructed where indicated on drawings.

E. Top Plates in Bearing Partitions: Shall be doubled and lapped at each intersection with walls or partitions. Stagger the joints in the upper and lower members of the top plate not less than 4 feet and splice as shown.

F. Provide blocking not less than 2 inches in thickness of the same width as studs as shown on drawings. Also, install all fire stopping as required by Section 708 of the California Building Code.

G. Frame corners solid where stud walls or partitions meet, or as indicated on drawings.

H. Retighten anchor bolts before closing in.

3.5 WOOD BACKING AND NAILING STRIPS

A. Provide all wood backing, furring or blocking indicated or required for proper installation and attachment or work of other trades. Form lumber, which has been cleaned and is in sound conditions, may be used unless another material is indicated.

B. Provide wood stripping where indicated for attachment of finish materials to wood or concrete surfaces

3.6 TOLERANCES

A. Framing Members: 1/4 inch maximum from the true position.

B. Surface Flatness of Floor: 1/4 inch in 10 feet maximum.

3.7 CLEANUP

A. Upon completion of the installation activity, remove all waste, sawdust, dirt, wrappings, and excess materials, tools, and equipment. Thoroughly clean all surfaces to the satisfaction of the Architect.

END OF SECTION

SECTION 06 16 00

SHEATHING

PART 1 GENERAL

1.1 WORK INCLUDED

A. Includes but is not limited to:
   1. Wall sheathing
   2. Roof and floor sheathing

1.2 RELATED WORK

A. Division 1 - General Requirements

B. Division 6 - Wood, Plastics and Composites

1.3 REFERENCES

A. CBC Title 24, Chapter 23

B. PS-1 - Construction and Industrial Plywood

C. PS-2 – Performance Standard for Wood-Based Structural Panels

D. APA - American Plywood Association

E. ASTM F1667 – Common Wire Nails

F. National Design Specification

1.4 QUALITY ASSURANCE

A. Plywood Grading Agency: Certified by APA

1.5 REGULATORY REQUIREMENTS

A. Conform to the California Building Code, Chapter 23

1.6 DELIVERY, STORAGE, AND HANDLING

A. Store and protect products under provisions of Section 01 66 00

B. All pieces of sheathing shall be stamped with a grade stamp

PART 2 PRODUCTS

2.1 STRUCTURAL SHEATHING:

A. Sheathing shall conform to the requirements of U.S. Product Standard PS 1 or PS 2, and

each piece shall be clearly and legibly grade-marked with established symbols of the American Plywood Association. Grades shall be as shown on the Drawings. Exterior glue is required.

2.2 CONNECTING HARDWARE:

A. Furnish and install all connecting hardware indicated on the Drawings specified herein or required to complete the work.

B. Materials:
   1. Nails for wood-to-wood connections for attachment of sheathing: Common wire, galvanized for exterior work and pressure-treated wood.

PART 3 EXECUTION

3.1 FRAMING

A. General: Install all wood framing making proper provisions for work of other trades. Do all cutting of wood required to accommodate plumbing, heating and ventilating, electrical and other trades. Fit neatly around all exposed items, such as outlet boxes, conduits, pipes, and ducts.

B. Sheathing: Install roof sheathing and subflooring with long dimension perpendicular to joists. Install wall sheathing with long dimensions vertical. Sheathing shall have edges blocked and butted tightly and nailed for diaphragm or shear wall stresses as indicated on drawings. Sheathing panels in non-shear walls shall be spaced with a gap of 1/8" where installed under cement plaster finish. All sheathing shall be laid with the best face on the exposed side. Stagger joints if more than one layer is indicated. Machine nailing is subject to satisfactory job site performance.

C. Provide blocking not less than 2 inches in thickness of the same width as studs as shown on drawings. Also, install all fire blocking as required by Section 718 of the California Building Code.

3.2 SHEATHING

A. Secure wall sheathing horizontally perpendicular or vertically parallel to wall studs, with ends staggered over firm bearing. Provide solid blocking between sheathing.

B. Secure roof sheathing perpendicular to framing members with ends staggered. Secure sheet edges over firm bearing. Provide solid blocking between sheathing.

3.3 TOLERANCES

A. Framing Members: 1/4 inch maximum from the true position

B. Surface Flatness of Floor: 1/4 inch in 10 feet maximum

END OF SECTION

SECTION 06 17 10

SHOP-FABRICATED STRUCTURAL WOOD

PART 1 GENERAL

1.1 WORK INCLUDED

A. Wood chord trusses with metal web members.

B. Bridging, bracing, and anchorage.

C. Structural design of open-web wood trusses.

1.2 RELATED WORK

A. Division 1 - General Requirements

B. Division 6 - Wood, Plastics, and Composites

1.3 REFERENCES

A. Redbuilt (ICC Evaluation Report No. ESR-1774)

1.4 SYSTEM DESCRIPTION

A. Design Loads: See Structural Drawings.

1.5 QUALITY ASSURANCE

A. Manufacturer: Company specializing in the manufacture of plywood web joists with three years minimum experience. Approval of these construction documents is based on using products manufactured by Redbuilt. The Engineer must approve other manufacturers and shall require a (no cost) Change Order

B. Design trusses under the direct supervision of a California licensed engineer experienced in structural framing design.

C. The manufacturer shall maintain a quality control program with periodic audits performed by an accredited agency in compliance with ANSI/TPI 1.

1.6 REGULATORY REQUIREMENTS

A. Conform to California Building Code for loads, seismic zoning, and other governing criteria.

1.7 SUBMITTALS

All submittal shall be submitted under the provisions of Section 01 33 00

A. Submittal No. 06 17 10A (#) – Product Data:
   1. Manufacturer's product information and installation instructions for each open-web wood trusses and accessories item.

B. Submittal No. 06 17 10B (#) – Shop Drawings:
   1. Indicate framing system, sizes and spacing of joists, loads, bearing and anchor details, bridging and bracing, and framed openings.

C. Submittal No. 06 17 33C (#) – Samples: Not required.

1.8 DELIVERY, STORAGE, AND HANDLING

A. Store and protect products under provisions of Section 01 60 00.

B. Protect trusses from moisture, warpage, and distortion during transit and when stored.

PART 2 PRODUCTS

2.1 ACCEPTABLE FABRICATORS:

A. Red I-Joist, Redbuilt LLC, Boise, Idaho

B. Substitutions: Under provisions of Section 01 25 00

2.2 MATERIALS

A. Chords: Chords consist of either Redlam LVL, MSR lumber, or TimberStrand LSL. Redlam LVL is recognized in the approved quality control manual. TimberStrand LSL is recognized in ESR-1387. MSR lumber is graded as either 2100F-1.8E, 2400F-2.0E, or 2700F-2.2E in accordance with grading rules specified in the approved quality control manual.

B. Webs: Steel tubing is cold-formed from coil stock specified in the approved quality control documentation. The electrically welded steel tubing ends are stamped flat, and have punched holes for the pin connectors. Each web member gauge is identified as specified in the RedBuilt Open-Web truss quality control manual. Truss Bridging: Type, size, and spacing as indicated on approved drawings and by the manufacturer.

C. Pin Connectors: The steel pin connectors are of the dimensions and materials as specified in the approved RedBuilt Open-Web truss quality control manual.

D. Bearing Clips: Bearing clips have configurations specific to each Open-Web truss series and are fabricated from either ASTM A36 or ASTM A653 steel, as specified in the manufacturing standard.

E. Tension Connector: The tension connector is a variable-density LVL component used at splice locations of the truss tension chords. The tension connector has both nondensified and densified sections. The nondensified section is finger-jointed to sawn lumber tension chord members, and the densified section is spliced with steel plates on both sides of the connector with the number of bolts required by design.

2.3 ACCESSORIES

A. Fasteners: Plain finish steel, type to suit the application.

2.4 FABRICATION

A. Fabrication shall not begin until the Architect have approved truss drawings.

B. Identify open-web truss by a stamp indicating; truss type, ICC Report No., Manufacturer's name, plant number, and report number.

C. Verify dimensions and site conditions prior to fabrication.

PART 3 EXECUTION

3.1 INSPECTION

A. Verify that supports and openings are ready to receive trusses.

B. Beginning of installation means acceptance of existing conditions.

3.2 PREPARATION

A. Coordinate placement of support items.

3.3 INSTALLATION

A. Install trusses in accordance with the manufacturer’s instructions.

B. Place trusses true to line and level.

C. Provide temporary bracing to position trusses in place until permanently secured.

D. Place permanent bridging, bracing, and anchors to maintain trusses straight and in the correct position before installation of decking or inducing loads.

E. Do not field cut or notch trusses.

F. Place headers and supports to frame openings required.

G. Frame openings between trusses with lumber in accordance with Section 06 10 00.

H. Coordinate placement of decking with work of this Section.

3.4 TOLERANCES

A. Framing Members: 1/4 inch maximum from true position.

END OF SECTION

SECTION 06 17 13

LAMINATED VENEER LUMBER

PART 1 GENERAL

1.1 DESCRIPTION

A. Products Supplied But Not Installed Under This Section
   1. Laminated veneer lumber framing members

1.2 RELATED WORK

A. Section 06 11 00 - Wood Framing

1.3 REFERENCES

A. ASTM D 2559 - Specification for Adhesives for Structural Laminated Wood Products for Use Under Exterior (Wet Use) Exposure Conditions

B. Redbuilt (ICC Evaluation Service, Inc. Report No. ESR-2993)

1.4 SYSTEMS DESCRIPTION

A. Design Requirements
   1. Fabricator shall design members to meet the dimensions indicated on the Drawings.
      a. Designs shall be under the supervision of a registered professional engineer.
      b. Designs shall be in accordance with standard engineering practice and meet the requirements of the National Research Board and The National Design Specification for Wood.

1.5 SUBMITTALS

All submittals shall be submitted under the provisions of Section 01 33 00.

A. Submittal No. 06 17 13A (#) – Product Data:
   1. Manufacturer's product information and installation instructions for each LVL framing and accessories item.

B. Submittal No. 06 17 13B (#) – Shop Drawings:
   1. Show special components and installations not fully dimensioned or detailed in the manufacturer's product data. Include placing drawings for framing members showing size designations, number, type, location, and spacing. Show supplemental strapping, bracing, splices, bridging, accessories, and details.

C. Submittal No. 06 17 13C (#) – Samples: Not required.

1.6 QUALITY ASSURANCE

A. Certifications
   1. Identify lumber by grade stamp or stamps noting the name and plant number of the Manufacturer, grade, National Research Board report number, and quality control

agency.

1.7 DELIVERY, STORAGE & HANDLING

A. Store members on the job site per the Manufacturer's instructions.

B. Keep dry and provide supports to keep members off the floor.

C. Split plastic wrappers of members stored encased in plastic on the bottom side to allow for air circulation.

PART 2 PRODUCTS

2.1 ACCEPTABLE MANUFACTURERS

A. RedLam, Redbuilt LLC, Boise, ID.

B. Substitutions: Under provisions of Section 01 25 00

2.2 MATERIALS

A.

Stress Grade		
1	Fb	2900 psi
2	Ft	1660 psi
3	Fv	285 psi
4	Fc Perpendicular	750 psi
5	Fc Parallel	2635 psi
6	E	2,000,00 psi

B. Adhesive - Meet requirements of ASTM D 2559.

2.3 FABRICATION

A. Cut members to accurate length, angle, and size to ensure tight joints for finished installation.

PART 3 EXECUTION

3.1 INSPECTION

A. Verify that supports are ready to receive laminated veneer lumber.

B. Verify sufficient end-bearing area.

C. Beginning of installation means acceptance of existing conditions.

3.2 PREPARATION

A. Coordinate placement of support items.

3.3 ERECTION

A. Set structural members level and plumb in correct positions

B. Provide temporary bracing and anchorage to hold members in place until permanently secured.

C. Fit members together accurately without trimming, cutting, or any other unauthorized modification.

3.4 TOLERANCES

A. Framing Members: 1/2 inch maximum from the true position

END OF SECTION

SECTION 06 17 53

METAL PLATE CONNECTED WOOD TRUSSES

PART 1 GENERAL

1.1 WORK INCLUDED

A. Wood trusses with metal connection plates.

B. Bridging, bracing, and anchorage.

C. Structural design of wood trusses.

1.2 RELATED WORK

A. Division 1 - General Requirements

B. Division 6 - Wood, Plastics, and Composites

1.3 REFERENCES

A. Structural Building Components Association.

B. Truss Plate Institute: ANSI/TPI-1 National Design Standard for metal plate connected wood truss construction.

1.4 SYSTEM DESCRIPTION

A. Design Loads: See Structural Drawings.

B. See truss layout drawings, detail sheets, and truss drawings/calculations by Systems Plus Lumber Co.

1.5 QUALITY ASSURANCE

A. Manufacturer: Systems Plus Lumber Co., Anderson, CA

B. Design trusses under the direct supervision of a California licensed engineer experienced in structural framing design.

C. Special inspection is required as outlined in the General Structural Notes of the construction drawing set, and the CBC.

1.6 REGULATORY REQUIREMENTS

A. Conform to Title 24, Part 2 for loads and other requirements.

1.7 DELIVERY, STORAGE, AND HANDLING

A. Store and protect products under provisions of Section 01 60 00.

B. Protect trusses from moisture, warpage, and distortion during transit and when stored.

PART 2 PRODUCTS

2.1 ACCEPTABLE FABRICATORS:

A. Systems Plus Lumber Co., Anderson, CA

B. Substitutions: Under provisions of 01 62 00, a Truss Fabricator that has provided engineered truss drawings and fabricated trusses for a similar project in the last three years approved by the Architect. A Construction Change Directive reviewed and approved by the Structural Engineer is required for truss drawing substitutions. The contractor is responsible for paying for Structural Engineer and paying a design fee of $3,000 to Systems Plus.

2.2 MATERIALS

A. Wood Chord Members: Diagonals, top and bottom chord, to be Douglas Fir, maximum moisture content of 19 percent. Grades as shown on submittal. Finger scarfing is permitted if joint capacity exceeds the stress limit of the member.

B. Metal Connector Plates: Manufactured by a Truss Plate Institute member – 20 ga. minimum, galvanized steel.

C. Truss Bridging: Type, size, and spacing as indicated on approved drawings and by the manufacturer.

2.3 ACCESSORIES

A. Fasteners: Plain finish steel, type to suit the application.

B. Bearing Plates: Hot-dipped galvanized steel.

2.4 FABRICATION

A. Fabrication shall not begin until the Architect have approved truss drawings.

B. Fabricate trusses to achieve the requirements shown on approved truss drawings.

C. Verify dimensions and site conditions prior to fabrication.

PART 3 EXECUTION

3.1 INSPECTION

A. Verify that supports and openings are ready to receive trusses.

B. Beginning of installation means acceptance of existing conditions.

C. Specific items to be inspected are as follows:
1. Fabrication of finger joints, glue, etc. (if applicable).
2. Chord splice control.
3. Connection plate placement.

3.2 PREPARATION

A. Coordinate placement of support items.

3.3 INSTALLATION

A. Install trusses in accordance with the manufacturer's instructions.

B. Place trusses true to line and level.

C. Provide temporary bracing to position trusses in place until permanently secured.

D. Place permanent bridging, bracing, and anchors to maintain trusses straight and in the correct position before installation of decking or inducing loads.

E. Do not field cut trusses.

F. Place headers and supports to frame openings required.

G. Frame openings between trusses with lumber in accordance with Section 06 10 00.

H. Coordinate placement of decking with work of this Section.

3.4 TOLERANCES

A. Framing Members: 1/4 inch maximum from true position.

END OF SECTION

SECTION 06 20 00

FINISH CARPENTRY

PART 1 GENERAL

1.1 SUMMARY

A. Section Includes: Finish carpentry items, other than shop-prefabricated casework, with accessories as required for complete installation.
   1. Window trims, sills and other wood trims.
   2. Exterior fascias and trims

1.2 SUBMITTALS

A. Product Data: Submit literature for manufactured items.

B. Shop Drawings: Indicate materials and wood species, component profiles, fastening, joining details, finishes, and accessories to a minimum scale of 1-1/2 inch to one foot.

C. Samples: Furnish samples of each type of finish carpentry, 12” long min.

1.3 QUALITY ASSURANCE

A. Standards: Perform finish carpentry in accordance with standards of Woodwork Institute (formerly Woodwork Institute of California) "Manual of Millwork."

1.4 DELIVERY, STORAGE, AND HANDLING

A. Do not deliver materials until site conditions are adequate to receive work; protect items from weather while in transit.

B. Store materials indoors, in ventilated areas with constant but minimum temperature of 60 degrees F and maximum relative humidity of 25% to 55%.

C. Do not begin installation of finish carpentry until space is fully enclosed and mechanical systems are fully operational.

D. Maintain interior installation areas at 70 degrees F and 50% to 55% relative humidity.

E. Immediately remove from site materials with visible mold and materials with mildew.

PART 2 PRODUCTS

2.1 MATERIALS, GENERAL

A. Lumber: DOC PS 20 and applicable grading rules of inspection agencies certified by ALSC's Board of Review.

B. Softwood Plywood: DOC PS 1.

C. Opaque Painted Exterior Wood Trim: Redwood or Western Red Cedar: Custom grade, kiln dried, mixed grain, S-4-S.

D. Hardboard: AHA A135.4.

E. Interior Hardwood Trim:
   1. Paint Grade: Custom Grade, kiln dried Poplar, Alder or Douglas Fir, S-4-S

F. MDF: ANSI A208.2, Grade 130, made with binder containing no urea-formaldehyde resin.

G. Particleboard: ANSI A208.1, Grade M-2, made with binder containing no urea-formaldehyde resin.

H. Melamine-Faced Particleboard: Particleboard complying with ANSI A208.1, Grade M-2, finished on both faces with thermally fused, melamine-impregnated decorative paper complying with LMA SAT-1.

I. Plywood Soffits:
   1. Quality: Custom Grade, opaque paint finish
   2. Wood: Western Red Cedar exterior grade plywood
   3. Surface: Sanded with no visible checks, cracks, voids or patches.

J. Lumber for Shimming, Blocking, and Backing: No. 2 Douglas Fir.

K. Anchors, Nails and Screws: Select the material, type, size and finish required by each substrate for secure anchorage; provide toothed steel or lead expansion bolt screws for drilled-in-place anchors.

L. Wood Filler: Color to match wood being filled.

2.2 FABRICATION

A. Fabricate finish carpentry items to Woodwork Institute Premium standards.

B. Use exposed fastening devices or nails only when approved in writing by Architect and unavoidable; arrange neatly.

PART 3 EXECUTION

3.1 EXAMINATION

A. Field Measurements: Take field measurements prior to preparation of shop drawings and fabrication where possible; do not delay job progress, allow for trimming and fitting.

B. Verify surfaces are ready to receive work and field measurements are as shown on shop drawings.
   1. Beginning installation signifies acceptance of conditions.

C. Ensure mechanical and electrical items affecting work are properly placed, complete, and have been inspected by applicable authorities prior to commencement of installation.

D. Inspect each piece of finish carpentry and discard damaged and defective pieces.

3.2 INSTALLATION

A. Install work consistent with specified WI MoM quality grade, plumb, level, true and straight with no distortions; shim as required, using concealed shims.
   1. Prime paint surfaces in contact with cementitious materials prior to installation.

B. Secure work to blocking with countersunk, concealed fasteners and blind nailing as required for a complete installation.

C. Scribe and cut for accurate fit to other finished work.

D. Install trim in single, unjointed lengths for openings and for runs less than 10'-0".
   1. For longer runs, use only one piece less than 10'-0" in any straight run; provide scarf joints between members.
   2. Stagger joints in adjacent members.
   3. Cope at returns and miter at corners.

E. Accessories: Install accessories in accordance with manufacturer's recommendations in locations indicated or as directed by Architect.

F. Acceptable Tolerances:
   1. Variation from True Position: Maximum 1/16" at any position and maximum 1/8" in any 10'-0" length.
   2. Adjoining Surfaces of Same Material: No variation permitted.
   3. Offset with Abutting Materials: Maximum 1/32".

G. Preparation for Field Finishing:
   1. Sand work smooth and set exposed nails and screws.
   2. Apply wood filler in exposed nail and screw indentations and leave ready to receive site-applied finishes.
   3. Seal concealed and semi-concealed surfaces; brush apply only, using primer consistent with finish coats.

END OF SECTION

SECTION 06 41 00

CUSTOM CASEWORK

PART 1 GENERAL

1.1 SUMMARY

A. Section Includes: Provide mill fabricated architectural woodwork with accessories as required for complete finished installation including cabinetwork hardware.
   1. Provide cabinetwork.

1.2 SUBMITTALS

A. Product Data: Submit literature for manufactured items.

B. Product Shop Drawings:
   1. Include materials, dimensioned plans, elevations, and sections, fastening methods, assembly methods, joint details, accessory listings, and schedule of finishes. Include depths of all casework in submittal.

C. Samples: Furnish samples of each exposed architectural woodwork finish on each type of specified wood, and including each exposed cabinet and display case hardware.

1.3 QUALITY ASSURANCE

A. Standards: Perform architectural woodwork in accordance with recommendations Woodwork Institute (formerly Woodwork Institute of California) "Manual of Millwork" (WI MoM).

B. Seismic Anchorage: Provide seismic anchorage for wall and base cabinets as required by California Code of Regulations (CCR), Title 24, Part 2.

1.4 DELIVERY, STORAGE, AND HANDLING

A. Do not deliver architectural woodwork until site conditions are adequate to receive work; protect items from weather while in transit.
   1. Allow architectural woodwork shop finish to completely dry prior to delivery to site; allow materials to off-gas volatile organic compound (VOC) emissions off site.

B. Store materials indoors, in ventilated areas with constant but minimum temperature of 60 degrees F and maximum relative humidity of 25% to 55%.

C. Do not begin installation of finish carpentry until space is fully enclosed and mechanical systems are fully operational.
   1. Maintain interior installation areas at 70 degrees F and 50% to 55% relative humidity.

D. Immediately remove from site materials with visible mold and materials with mildew.

1.5 SURFACE DEFINITIONS

A. Surface Definitions shall be in accordance with those of the Architectural Woodwork Standards (1st Edition, October 2009) as depicted in the graphic below.

B. Material for the Exposed Exterior and Exposed Interior surfaces shall be high-pressure thermoplastic laminate. White melamine will not be allowed. Melamine may be used at Semi-Exposed surfaces.

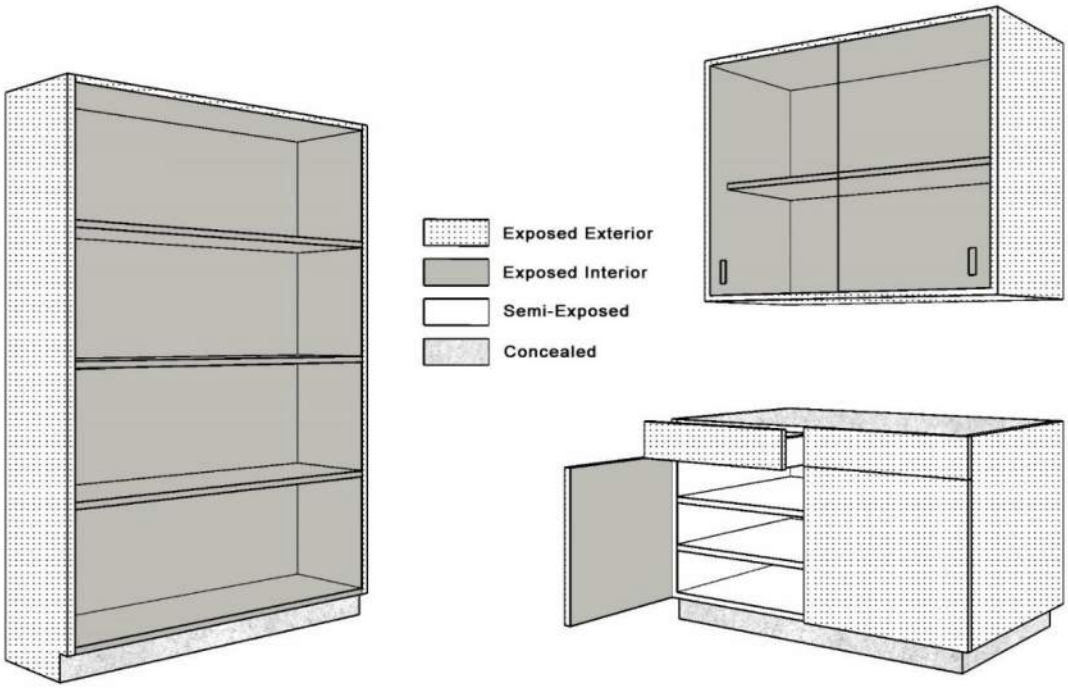

PART 2 PRODUCTS

2.1 MATERIALS

A. Plastic Laminate Finished Casework and Countertops:
1. Quality: WI MoM/Custom Grade, Type I, Style A, frameless, multiple unit construction.
2. Plastic Laminates:
   a. Types: NEMA LD-3.1 high pressure laminates.
      1) Horizontal Surfaces: General Purpose Type, nominal 0.045".
      2) Vertical Surfaces: Vertical Surface Type, nominal 0.032".
      3) Unexposed Surfaces: Balanced with 0.030" melamine backing sheet.
      4) Formed Surfaces: Postforming Type, nominal 0.042".
   b. Manufacturers:
      1) Formica
      2) Nevamar
      3) Wilsonart
      4) Pionite
      5) Or accepted equal.
   c. Colors: As selected by Architect from manufacturer's full range of available colors and patterns, including premium line, and excluding metallics.
3. MDF Core: Provide Medite Corp. (Sierrapine)Medite II or Rodman Industries/Resincore I formaldehyde-free medium density fiberboard (MDF).
4. Provide 1 1/8” thick plastic laminate covered plywood shelving at all open casework units and at all locations where shelving span exceeds 36” (thirty-six inches)
5. Edgebanding: Provide Doelken-Woodtape, Stock Program including SpecLine,

Woodgrain Selector, and KwikEdge.

B. Casework Hardware: Provide casework hardware items as required for complete installation as indicated; provide types as listed in WI MoM "Manual" but no less than following types. Plug-In Pin Type Shelf Supports (Transparent Finished Casework): Provide holes 1" on center.
   1. Adjustable Shelf Standards and Supports (Contractor Option at Plastic Laminate Casework): Flush mounted in cabinet.
      a. Manufacturers:
         1) Futura/No. AS 662 with AS 563/663 support.
         2) Knape & Vogt/No. 255 with No. 256 support.
         3) Or accepted equal.
   2. Cabinet Hinges: European concealed type, minimum 160 degree opening, with spring closer.
   3. Cabinet and Drawer Pulls: Wire type, 4" center to center, satin chrome finish.
      a. Manufacturers:
         1) Baldwin Hardware Manuf. Corp./No. 4672.
         2) Stanley Hardware/No. 4484.
         3) The Engineered Products Co./No. MC-4023.
         4) Or accepted equal.
   4. Drawer Slides: Full extension, rail mounted type, minimum 100 lb. capacity with ball-bearing rollers.
      a. Manufacturers:
         1) Accuride.
         2) Knape & Vogt.
         3) Or accepted equal.
   5. Cabinet Locks: Pin and tumbler slide bolt lock, two keys each.
      a. Manufacturers:
         1) Schlage Lock Co./46-002 Cabinet Locks.
         2) Best Access Systems/5L Series.
         3) CompX International/Timberline Locks.
         4) Or accepted equal.

C. Anchors and Screws: Fasten cabinets to walls with #14 round washer head screws with embedment depth indicated in Drawings; use self-drilling screws at attachment to metal framing; use Simpson Titan HD for drilled-in-place anchors unless otherwise indicated in Drawings.

D. Wood Filler: Color to match wood being filled.

E. Display Cases:
   1. Custom casework cabinet to match balance of cabinets under this section.
   2. Provide four (4) ½” thick tempered glass shelves with polished edge.
   3. Provide ½” thick tempered glass sliding doors with polished edge.
   4. Provide two (2) LED puck lights at each case.

2.2 FABRICATION

A. General: Fabricate architectural woodwork in accordance with specified quality standards.

B. Plastic Laminate:
   1. Apply plastic laminate finish in full, uninterrupted sheets consistent with manufactured sizes.

2. Make corners and joints hairline; slightly bevel arises.
3. Locate butt joints at least 2'-0" from cutouts.
4. Cap exposed edges with plastic laminate of same finish and pattern.
5. Apply laminate backing sheet to reverse side of laminate surfaces.
6. Provide cutouts for inserts, fixtures and fittings; verify locations from on-site dimensions.
7. Prime paint contact surfaces of cutouts.

C. Use exposed fastening devices or nails only when approved and unavoidable; arrange neatly.

D. Assemble woodwork in shop in sizes easily handled and to ensure passage through building openings.

PART 3 EXECUTION

3.1 EXAMINATION

A. Field Measurements: Take field measurements prior to preparation of shop drawings and fabrication where possible; do not delay job progress, allow for trimming and fitting.

3.2 INSTALLATION

A. Install work consistent with specified quality grade, plumb, level, true and straight with no distortions.
1. Shim as required, using concealed shims.

B. Ensure mechanical and electrical items affecting architectural woodwork are properly placed, complete, and have been inspected by Architect prior to commencement of installation.

C. Secure work to grounds, stripping and blocking with countersunk, concealed fasteners and blind nailing as required for a complete installation.

D. Scribe and cut for accurate fit to other finished work.

E. Install architectural woodwork under supervision of factory-trained mechanics.

F. Attach architectural woodwork securely in place with uniform joints providing for thermal and building movements.

G. Acceptable Tolerances:
1. Variation from True Position: Maximum 1/16" at any position and maximum 1/8" in any 10'-0" length.
2. Adjoining Surfaces of Same Material: No variation permitted.
3. Offset with Abutting Materials: Maximum 1/32".

END OF SECTION

SECTION 06 61 16

SOLID SURFACING FABRICATIONS

PART 1 GENERAL

1.1 SUMMARY

A. The extent of solid polymer fabrications is shown on the Drawings and includes miscellaneous specialty item as listed herein:
   1. Counter tops

1.2 SUBMITTALS

A. Product Data:
   1. Including all pertinent performance characteristics and criteria.

B. Shop Drawings:
   1. Indicate materials, construction, sizes and seams, quantities, finishes, and installation details. Show relationship of products to required wall framing, required blocking in walls and wall finishes. Submit a seaming plan.

C. Color Samples:
   1. Submit manufacturer's full range of colors for color selection.

1.3 DELIVERY, STORAGE, AND HANDLING

A. Deliver, store, handle, and protect products in accordance with manufacturer's instructions.

1.4 WARRANTY

A. Provide 10 year limited Warranty

PART 2 PRODUCTS

2.1 MANUFACTURER

A. Subject to compliance with requirements, provide products by one of the following:
   1. Corian Surfaces from the DuPont company (basis of design)
   2. Or accepted equal.

2.2 MATERIALS

A. Solid polymer components
   1. Cast, nonporous, filled polymer, not coated, laminated or of composite construction with through body colors meeting ANSI Z124.3 or ANSI Z124.6, having minimum physical and performance properties specified.
   2. Superficial damage to a depth of 0.010 inch (.25 mm) shall be repairable by sanding and/or polishing.

B. Thickness: ½" (standard counter)

C. Dimension: 144” x 30” sheet

D. Edge Treatment: As indicated on drawings

E. ADA accessible

F. Backsplash: Coved

G. Sidesplash: Applied

H. Performance characteristics:

Property	Typical Result	Test
Tensile Strength	6,000 psi	ASTM D 638
Tensile Modulus	1.5×10^{-6} psi	ASTM D 638
Tensile Elongation	0.4% min	ASTM D 638
Flexural Strength	10,000 psi	ASTM D 790
Flexural Modulus	1.2×10^{-6} psi	ASTM D 790
Hardness	>85 56	Rockwell “M” Scale ASTM D 785 Barcol Impressor ASTM D 2583
Thermal Expansion	3.02×10^{-5} in./in./°C 1.80×10^{-5} in./in./°F	ASTM D 696
Gloss (60° Gardner)	5–75 (matte—highly polished)	ANSI Z124
Light Resistance	(Xenon Arc) No effect	NEMA LD 3-2000 Method 3.3
Wear and Cleanability	Passes	ANSI Z124.3 & ANSI Z124.6
Stain Resistance: Sheets	Passes	ANSI Z124.3 & ANSI Z124.6
Fungus and Bacteria Resistance	Does not support microbial growth	ASTM G21 & ASTM G22
Boiling Water Resistance	No visible change	NEMA LD 3-2000 Method 3.5
High Temperature Resistance	No change	NEMA LD 3-2000 Method 3.6
Izod Impact (Notched Specimen)	0.28 ft.-lbs./in. of notch	ASTM D 256 (Method A)
Ball Impact Resistance: Sheets	No fracture—1⁄2 lb. ball: 1⁄4" slab—36" drop 1⁄2" slab—144" drop	NEMA LD 3-2000 Method 3.8
Weatherability	ΔE^*_{94}<5 in 1,000 hrs.	ASTM G 155
Specific Gravity †	1.7	
Water Absorption	Long-term 0.4% (3⁄4") 0.6% (1⁄2") 0.8% (1⁄4")	ASTM D 570
Toxicity	99 (solid colors) 66 (patterned colors)	Pittsburgh Protocol Test (“LC50”Test)
Flammability	All colors (Class I and Class A)	ASTM E 84, NFPA 255 & UL 723
Flame Spread Index	<25	
Smoke Developed Index	<25	

† Approximate weight per square foot: 1⁄4" (6 mm) 2.2 lbs., 1⁄2" (12.3 mm) 4.4 lbs.
Shapes meet or exceed the ANSI Z124.3 and ANSI Z124.6 standards for plastic sinks and lavatories.
NEMA results based on the NEMA LD 3-2000.

2.3 ACCESSORIES

A. Joint adhesive:
1. Manufacturer's standard one- or two-part adhesive kit to create inconspicuous, nonporous joints.

B. Sealant:
1. Manufacturer's standard mildew-resistant, FDA-compliant, NSF 51-compliant (food zone — any type), UL-listed silicone sealant in colors matching components.

C. Conductive tape:
1. Manufacturer's standard aluminum foil tape, with required thickness, for use with cutouts near heat sources.

D. Insulating felt tape:
1. Manufacturer's standard for use with conductive tape in insulating solid surface material from adjacent heat source.

2.4 FACTORY FABRICATION

A. Shop assembly
1. Fabricate components to greatest extent practical to sizes and shapes indicated, in accordance with approved shop drawings and manufacturer's printed instructions and technical bulletins.
2. Form joints between components using manufacturer's standard joint adhesive without conspicuous joints.
   a. Reinforce with strip of solid polymer material, 2" wide.
3. Provide factory cutouts for plumbing fittings and bath accessories as indicated on the drawings.
4. Rout and finish component edges with clean, sharp returns.
   a. Rout cutouts, radii and contours to template.
   b. Smooth edges.
   c. Repair or reject defective and inaccurate work.

B. Thermoforming:
1. Comply with manufacturer's data.
2. Heat entire component.
   a. Material shall be uniform, between 275 and 325 degrees Fahrenheit during forming.
3. Form pieces to shape prior to seaming and joining.
4. Cut pieces to finished dimensions.
5. Sand edges and remove nicks and scratches.

2.5 FINISHES

A. Color to be selected by Architect from the manufacturer's standard color chart.

B. Finish:
1. Provide surfaces with a uniform finish.
   a. Matte; gloss range of 5–20.

PART 3 EXECUTION

3.1 COORDINATION

A. Attend pre-installation conference, chaired by the General Contractor, to coordinate with other trades working in immediate area.

3.2 EXAMINATION

A. Examine substrates and conditions, with fabricator present for compliance with requirements for installation tolerances and other conditions affecting performance of work.

B. Proceed with installation only after unsatisfactory conditions have been corrected.

3.3 INSTALLATION

A. Install components plumb, level and rigid, scribed to adjacent finishes, in accordance with approved shop drawings and product data.
   1. Provide product in the largest pieces available.
   2. Form field joints using manufacturer's recommended adhesive, with joints inconspicuous in finished work.
      a. Exposed joints/seams shall not be allowed.
   3. Reinforce field joints with solid surface strips extending a minimum of 1 inch on either side of the seam with the strip being the same thickness as the top.
   4. Cut and finish component edges with clean, sharp returns.
   5. Rout radii and contours to template.
   6. Anchor securely to base cabinets or other supports.
   7. Align adjacent countertops and form seams to comply with manufacturer's written recommendations using adhesive in color to match countertop.
   8. Carefully dress joints smooth, remove surface scratches and clean entire surface.
   9. Install countertops with no more than 1/8-inch (3 mm) sag, bow or other variation from a straight line.

B. Coved backsplashes and applied sidesplashes:
   1. Install applied sidesplashes using manufacturer's standard color-matched silicone sealant.
   2. Adhere applied sidesplashes to countertops using manufacturer's standard color-matched silicone sealant.

3.4 REPAIR

A. Repair or replace damaged work which cannot be repaired to architect's satisfaction.

3.5 CLEANING AND PROTECTION

A. Keep components clean during installation.

B. Remove adhesives, sealants and other stains.

END OF SECTION

SECTION 07 21 00

BATT INSULATION SYSTEMS

PART 1 GENERAL

1.1 SUMMARY

A. Section Includes:
1. Provide thermal insulation system at all exterior walls, roof framing, floor framing and interior walls with accessories as required for complete installation.

1.2 SUBMITTALS

A. Product Data: Furnish manufacturer's literature for each type of insulation.
1. Indicate thermal insulation name and number as included in California Energy Commission's Directory of Certified Material.
2. Submit Underwriter's Laboratory approval numbers for required fire ratings; approvals of other laboratories contingent upon acceptance of applicable authorities.
3. Installation Instructions: Submit manufacturer's installation instructions.

PART 2 PRODUCTS

2.1 MATERIALS

A. Acceptable Manufacturers:
1. Knauf Insulation
2. Johns Manville/FSK-25 Thermal-Shield Insulation.
3. Owens-Corning Fiberglas Corp./Fiberglas FS-25 Insulation.
4. Certainteed.
5. Or accepted equal.

B. Materials
1. Acoustic Batt Insulation at:
   Interior Walls: R-13, 3 ½”, unfaced
   Exterior Walls (within closed cavity): R-19, 5 ½”, kraft faced
   Exterior Walls (exposed to space above ceiling): R-19, 5 ½” foil faced
   Roof: R-38, foil faced.
   Floor framing: R-30, unfaced.

2. Insulation Supports: Galvanized or electroplated steel wire supports with friction attachment to framing.
3. Nails or staples: Steel wire; electroplated; type and size to suit application.
4. Line Wire: Galvanized steel, 19 gauge wire.
5. Wire Mesh: 1 ½” x 17 gauge poultry netting.
6. Vapor Retarder: Type III, aluminum vapor retarder on one side.
7. Vapor Retarder Tape: Minimum 2" wide self-adhering type designed to maintain vapor retarder integrity and complying with fire resistance ratings as required by applicable codes.
8. Accessories: Furnish as recommended by insulation manufacturer for insulation types, substrates, and conditions involved.
9. Insulation shall comply with California standards for insulating material.

a. Flame Spread/Smoke Density Rating: Maximum 25/450, ASTM E84.

10. ASTM C665 (facing);
    Type I, Class A, (Unfaced)
    Type II, Class C, Category 1 (Kraft)
    Type III, Class A, Category 1 (FSK-25 foil)
    Type III, Class B, Category 1 (Foil)

PART 3 EXECUTION

3.1 EXAMINATION

A. Verify substrate and adjacent materials are dry and ready to receive insulation; beginning installation signifies acceptance of conditions.

B. Ensure mechanical and electrical items affecting work are properly placed, complete, and have been inspected prior to commencement of installation.

3.2 INSTALLATION

A. Install insulation in accordance with manufacturer's instructions.

B. Cut and trim insulation neatly, to fit spaces.
   1. Backed Insulation: Use insulation free of ripped backs and edges.

C. Fit insulation tight within spaces and tight to and behind mechanical and electrical services within insulation plane; leave no gaps or voids; maintain integrity of thermal barrier.

D. Maintain minimum ventilating airspace as required by the Drawings.

E. Friction fit in place; use tape or friction supports as necessary to assure permanent installation.
   1. Taping: Tape joints and tears in vapor retarder, including joints between insulation and surrounding construction, to ensure vapor-tight installation.
   2. Penetration Supports: Cut or bend pins in locations accessible to maintenance personnel, to eliminate potential hazards from exposed pin points.

END OF SECTION

SECTION 07 21 16

RIGID INSULATION WITH TAPERED FOAM

PART 1 GENERAL

1.1 WORK INCLUDED

A. Includes but not limited to:
   1. Rigid insulation at roof construction.
   2. Tapered extruded polystyrene foam.

1.2 REFERENCES

A. ASTM-C1289, Type II.

B. FS HH-1-1972/1, Class 2 – Rigid Insulation.

1.3 SYSTEM DESCRIPTION

A. Materials of this Section shall provide a thermal and vapor barrier at building enclosure elements and provide positive drainage to the roof surfaces.

1.4 SUBMITTALS

A. Product Data: Submit manufacturer's installation instructions.

B. Shop Drawings: Submit plan views indicating thickness of insulation and scopes. Field verify existing conditions and roof slopes prior to preparing shop drawings.

PART 2 PRODUCTS

2.1 ACCEPTABLE MANUFACTURERS

A. RMAX

B. ATLAS

C. CELOTEX

D. Or accepted equal.

2.2 MATERIALS

A. Rigid Insulation: FS HH-1-1972/1, Class 2 Polyisocyanurate rigid board, 2 lbs./cu ft. minimum density, both sides having glass fiberglass/organic facers, square edges, 25 psi compressive strength minimum.

B. Tapered foam: Extruded polystyrene foam (XPS) board, Type IV, rigid closed cell type, with integral high density skin, 25 psi compressive strength minimum.

C. Insulation shall comply with California quality standards for insulating material. Maximum flame spread rating of 25 and maximum smoke density not to exceed 450.

D. Manufacturer's standard attachment discs and fasteners.

E. Apply liquid foam around openings to provide tight seal.

PART 3 EXECUTION

3.1 PREPARATION

A. Verify adjacent materials are dry and ready to receive installation.

B. Sweep roof surfaces clean prior to installation.

3.2 INSTALLATION

A. Install rigid insulation in accordance with manufacturer's instructions and in accordance with approved shop drawings.

B. Apply insulation under same conditions as specified for application of roof membrane.

C. Trim insulation neatly to fit spaces. Use panels free of damage.

D. Fit insulation tight in spaces and tight to exterior side of mechanical and electrical services within the plane of insulation. Leave no gaps or voids.

E. Install tapered foam over rigid panels. Conform to slopes indicated on drawings.

F. Application of roof membrane shall immediately follow the application of the insulation.

3.3 CLEAN-UP

A. Remove and dispose of excess insulation, wrapping and other waste materials.

END OF SECTION

SECTION 07 54 19

POLYVINYL-CHLORIDE ROOFING

PART 1 GENERAL

1.1 SECTION INCLUDES

A. PVC thermoplastic membrane attached with mechanical fasteners.

B. Fiberglass-faced primed roof board, attached with mechanical fasteners.

C. Prefabricated flashings, corners, parapets, stacks, vents, and related details.

D. Fasteners, adhesives, and other accessories required for a complete roofing installation.

E. Traffic Protection.

1.2 REFERENCES

A. NRCA - The NRCA Roofing and Waterproofing Manual.

B. ASCE 7 - Minimum Design Loads For Buildings And Other Structures.

C. UL - Roofing Materials and Systems Directory, Roofing Systems (TGFU.R10128).

D. ASTM C 1289 - Standard Specification for Faced Rigid Cellular Polyisocyanurate Thermal Insulation Board.

E. ASTM D 751 - Standard Test Methods for Coated Fabrics.

F. ASTM D 4434 - Standard Specification for Poly(Vinyl Chloride) Sheet Roofing.

G. ASTM E 108 - Standard Test Methods for Fire Tests of Roof Coverings.

H. ASTM E 119 - Standard Test Methods for Fire Tests of Building Construction and Materials.

1.3 SYSTEM DESCRIPTION

A. General: Provide installed roofing membrane and base flashings that remain watertight; do not permit the passage of water; and resist specified uplift pressures, thermally induced movement, and exposure to weather without failure.

B. Material Compatibility: Provide roofing materials that are compatible with one another under conditions of service and application required, as demonstrated by roofing membrane manufacturer based on testing and field experience.

C. Physical Properties:
1. Roof product must meet the requirements of Type III PVC sheet roofing as defined by ASTM D 4434 and must meet or exceed the following physical properties.
2. Thickness: 60 mil, nominal, in accordance with ASTM D 751.
3. Thickness Over Scrim: ≥ 28 mil in accordance with ASTM D 751.

4. Breaking Strengths: ≥ 390 lbf. (MD) and ≥ 438 lbf. (XMD) in accordance with ASTM D 751, Grab Method.
5. Elongation at Break: ≥ 31% (MD) and ≥ 31% (XMD) in accordance with ASTM D 751, Grab Method.
6. Heat Aging in accordance with ASTM D 3045: 176 °F for 56 days. No sign of cracking, chipping or crazing. (In accordance with ASTM D 4434).
7. Factory Seam Strength: ≥ 431 lbf. in accordance with ASTM D 751, Grab Method.
8. Tearing Strength: ≥ 132 lbf. (MD) and ≥ 163 lbf. (XMD) in accordance with ASTM D 751, Procedure B.
9. Low Temperature Bend (Flexibility): Pass at -40 °F in accordance with ASTM D 2136.
10. Accelerated Weathering: No cracking, checking, crazing, erosion or chalking after 5,000 hours in accordance with ASTM G 154.
11. Linear Dimensional Change: < 0.5% in accordance with ASTM D 1204 at 176 ± 2 °F for 6 hours.
12. Water Absorption: < 2.6% in accordance with ASTM D 570 at 158 °F for 166 hours.
13. Static Puncture Resistance: ≥ 56 lbs. in accordance with ASTM D 5602.
14. Dynamic Puncture Resistance: ≥ 14.7 ft-lbf. in accordance with ASTM D 5635.

D. Cool Roof Rating Council (CRRC):
1. Membrane must be listed on CRRC website.
   a. Initial Solar Reflectance: ≥ 88%
   b. Initial Thermal Emittance: ≥ 87%
   c. Initial Solar Reflective Index (SRI): ≥ 111
   d. 3-Year Aged Solar Reflectance: ≥ 68%
   e. 3-Year Aged Thermal Emittance: ≥ 84%
   f. 3-Year Aged Solar Reflective Index (SRI): ≥ 82

1.4 SUBMITTALS

A. Product Data sheets on each product to be used, including:
1. Preparation instructions and recommendations.
2. Storage and handling requirements and recommendations.
3. Installation methods.
4. Maintenance requirements.

B. Shop Drawings: Indicate insulation pattern, overall membrane layout, field seam locations, joint or termination detail conditions, and location of fasteners.

C. Verification Samples: For each product specified, two samples, representing actual product, color, and finish.
1. 4 inch by 6 inch sample of roofing membrane, of color specified.
2. Termination bar, fascia bar with cover, drip edge and gravel stop if to be used.
3. Each fastener type to be used for installing membrane, insulation/recover board, termination bar and edge details.

D. Submittal No. 07 54 19D: Installer Certification: Certification from the roofing system manufacturer that Installer is approved, authorized, or licensed by manufacturer to install roofing system.

E. Submittal No. 07 54 19 E: Manufacturer's warranties.

1.5 QUALITY ASSURANCE

A. Perform work in accordance with manufacturer's installation instructions.

B. Manufacturer Qualifications: A manufacturer specializing in the production of PVC membranes systems and utilizing a Quality Control Manual during the production of the membrane roofing system that has been approved by and is inspected by Underwriters Laboratories.

C. Installer Qualifications: Company specializing in installation of roofing systems similar to those specified in this project and approved by the roofing system manufacturer.

D. Source Limitations: Obtain components for membrane roofing system from roofing membrane manufacturer.

E. There shall be no deviations from the roof membrane manufacturer's specifications or the approved shop drawings without the prior written approval of the manufacturer.

1.6 REGULATORY REQUIREMENTS

A. Conform to applicable code for roof assembly wind uplift and fire hazard requirements.

B. Fire Exposure: Provide membrane roofing materials with the following fire-test-response characteristics. Materials shall be identified with appropriate markings of applicable testing and inspecting agency.
   1. Exterior Fire-Test Exposure:
      a. Class A; ASTM E 108, for application and roof slopes indicated.
   2. Fire-Resistance Ratings: Comply with ASTM E 119 for fire-resistance-rated roof assemblies of which roofing system is a part.
   3. Conform to applicable code for roof assembly fire hazard requirements.

C. Wind Uplift:
   1. Roofing System Design: Provide a roofing system designed to resist uplift pressures calculated according to the current edition of the ASCE-7 Specification *Minimum Design Loads for Buildings And Other Structures*.

1.7 PRE-INSTALLATION MEETING

A. Convene meeting not less than one week before starting work of this section.

B. Review methods and procedures related to roof deck construction and roofing system including, but not limited to, the following.
   1. Meet with County, Architect, testing and inspecting agency representative, roofing installer, roofing system manufacturer's representative, deck installer, and installers whose work interfaces with or affects roofing including installers of roof accessories and roof-mounted equipment.
   2. Review and finalize construction schedule and verify availability of materials, installer's personnel, equipment, and facilities needed to make progress and avoid delays.
   3. Examine deck substrate conditions and finishes for compliance with requirements, including flatness and fastening.
   4. Review structural loading limitations of roof deck during and after roofing.
   5. Review base flashings, special roofing details, roof drainage, roof penetrations, equipment curbs, and condition of other construction that will affect roofing system.
   6. Review governing regulations and requirements for insurance and certificates if applicable.
   7. Review temporary protection requirements for roofing system during and after installation.

8. Review roof observation and repair procedures after roofing installation.

1.8 DELIVERY, STORAGE AND HANDLING

A. Deliver roofing materials to Project site in original containers with seals unbroken and labeled with manufacturer's name, product brand name and type, date of manufacture, and directions for storing and mixing with other components.

B. Store liquid materials in their original undamaged containers in a clean, dry, protected location and within the temperature range required by roofing system manufacturer. Protect stored liquid material from direct sunlight.

C. Protect roof insulation materials from physical damage and from deterioration by sunlight, moisture, soiling, and other sources. Store in a dry location. Comply with insulation manufacturer's written instructions for handling, storing, and protecting during installation.

D. Store roof materials and place equipment in a manner to avoid permanent deflection of deck.

E. Store and dispose of solvent-based materials, and materials used with solvent-based materials, in accordance with requirements of local authorities having jurisdiction.

1.9 WARRANTY

A. Contractor's Warranty: The contractor shall warrant the roof application with respect to workmanship and proper application for two (2) years from the effective date of the warranty issued by the manufacturer.

B. Manufacturer's Warranty: Must be no-dollar limit type and provide for completion of repairs, replacement of membrane or total replacement of the roofing system at the then-current material and labor prices throughout the life of the warranty. In addition the warranty must meet the following criteria:
1. Warranty Period: 20 years from date issued by the manufacturer.
2. No exclusion for damage caused by ponding water.
3. No exclusion for damage caused by biological growth.
4. Issued direct from and serviced by the roof membrane manufacturer.
5. Transferable for the full term of the warranty.

PART 2 PRODUCTS

2.1 MANUFACTURER

A. All roofing system components to be provided or approved by roof system manufacturer.

B. Acceptable Manufacturers:
1. Duro-Last, EV Membrane
2. GAF, Everguard PVC X K
3. John Mansville, JM PVC with Elvaloy Kee Pouymer
4. Carlisle, PVC Sure Flex Kee HP
5. Versico PVC – Versiflex Kee HP
6. Or accepted equal

2.2 ROOFING SYSTEM COMPONENTS

A. Roofing Membrane: PVC thermoplastic membrane conforming to ASTM D 4434, type III,

fabric-reinforced, PVC. Membrane properties as follows:
1. Thickness:
   a. 60 mil. minimum
2. Exposed Face Color:
   a. White.

B. Accessory Materials: Provide accessory materials supplied by or approved for use by roof system manufacturer
1. Sheet Flashing: Manufacturer's standard reinforced PVC sheet flashing.
2. Factory Prefabricated Flashings: manufactured using Manufacturer's PVC membrane.
   a. Stack Flashings.
   b. Curb Flashings.
   c. Inside and Outside Corners.
3. Sealants and Adhesives: Compatible with roofing system and supplied by roof system manufacturer.
   a. Caulk.
   b. Strip Mastic.
4. Slip Sheet: Compatible with roofing system and supplied by roof system manufacturer.
5. Fasteners and Plates: Factory-coated steel fasteners and metal or plastic plates meeting corrosion-resistance provisions in FMG 4470, designed for fastening membrane and insulation to substrate. Supplied by roof system manufacturer.
   a. #14 Heavy Duty Fasteners.
   b. Steel Membrane Plates.
   c. 3 inch Metal Plates.
6. Termination and Edge Details: Supplied by roof system manufacturer.
   a. Termination Bar.
   b. 2-Piece Edge Metal System.
7. Vinyl Coated Metal: 24 gauge, hot-dipped galvanized, grade 90 metal with a minimum of 17 mil of PVC roofing membrane laminated to one side.
8. Two-Way Roof Vents: Supplied by roof system manufacturer. Install a minimum of 1 vent for each 1,000 ft^2 (93 m^2) of roof area. When required by manufacturer.

C. Substrate Board:
1. Glass-mat-faced, water-resistant gypsum substrate conforming to ASTM C 1177/C 1177M.
   a. ¼ inch thick.

PART 3 EXECUTION

3.1 EXAMINATION

A. Verify that the surfaces and site conditions are ready to receive work.

B. Verify that the deck is supported and secured.

C. Verify that the deck is clean and smooth, free of depressions, waves, or projections, and properly sloped to drains, valleys, eaves, scuppers or gutters.

D. Verify that the deck surfaces are dry and free of standing water, ice or snow.

E. Verify that all roof openings or penetrations through the roof are solidly set.

F. If substrate preparation is the responsibility of another contractor, notify Architect of unsatisfactory preparation before proceeding.

3.2 PREPARATION

A. Clean surfaces thoroughly prior to installation.

B. Prepare surfaces using the methods recommended by the manufacturer for achieving the best result for the substrate under the project conditions.

C. Surfaces shall be clean, smooth, free of fins, sharp edges, loose and foreign material, oil, grease, and bitumen.

3.3 INSTALLATION

A. Install insulation in accordance with the roof manufacturer's requirements.

B. Separation Board: Fiberglass-faced primed roof board.
1. Use only fasteners, stress plates and fastening patterns accepted for use by the roof manufacturer. Fastening patterns must meet applicable design requirements.
   a. Install fasteners in accordance with the roof manufacturer’s requirements. Fasteners that are improperly installed must be replaced or corrected.
   b. Attach boards in parallel courses with end joints staggered 50% and adjacent boards butted together with no gaps greater than ¼ inch.

C. Roof Membrane: 60 mil, PVC thermoplastic membrane.
1. Use only fasteners, stress plates and fastening patterns accepted for use by the roof manufacturer. Fastening patterns must meet the applicable design requirements.
2. Install fasteners in accordance with the roof manufacturer’s requirements. Fasteners that are improperly installed shall be replaced or corrected.
3. Mechanically fasten membrane to the structural deck utilizing fasteners and fastening patterns that in accordance with the roof manufacturer’s requirements.
4. Cut membrane to fit neatly around all penetrations and roof projections.
5. Unroll roofing membrane and positioned with a minimum 6 inch overlap.

D. Seaming:
1. Weld overlapping sheets together using hot air. Minimum weld width is 1-1/2 inches.
2. Check field welded seams for continuity and integrity and repair all imperfections by the end of each work day.

E. Membrane Termination/Securement: All membrane terminations shall be completed in accordance with the membrane manufacturer’s requirements.
1. Provide securement at all membrane terminations at the perimeter of each roof level, roof section, curb flashing, skylight, expansion joint, interior wall, penthouse, and other similar condition.
2. Provide securement at any angle change where the slope or combined slopes exceeds two inches in one horizontal foot.

F. Flashings: Complete all flashings and terminations as indicated on the drawings and in accordance with the membrane manufacturer’s requirements.
1. Provide securement at all membrane terminations at the perimeter of each roof level, roof section, curb flashing, skylight, expansion joint, interior wall, penthouse, and other similar condition.
   a. Do not apply flashing over existing thru-wall flashings or weep holes.
   b. Secure flashing on a vertical surface before the seam between the flashing and the main roof sheet is completed.
   c. Extend flashing membrane a minimum of 6 inches (152 mm) onto the main roof sheet beyond the mechanical securement.

d. Use care to ensure that the flashing does not bridge locations where there is a change in direction (e.g. where the parapet meets the roof deck).

2. Penetrations:
   a. Flash all pipes, supports, soil stacks, cold vents, and other penetrations passing through the roofing membrane as indicated on the Drawings and in accordance with the membrane manufacturer's requirements.
   b. Utilize custom prefabricated flashings supplied by the membrane manufacturer.
   c. Existing Flashings: Remove when necessary to allow new flashing to terminate directly to the penetration.
3. Pipe Clusters and Unusual Shapes:
   a. Clusters of pipes or other penetrations which cannot be sealed with prefabricated membrane flashings shall be sealed by surrounding them with a prefabricated vinyl-coated metal pitch pan and sealant supplied by the membrane manufacturer.
   b. Vinyl-coated metal pitch pans shall be installed, flashed and filled with sealant in accordance with the membrane manufacturer's requirements.
   c. Pitch pans shall not be used where prefabricated or field fabricated flashings are possible.

G. Roof Drains:
1. Coordinate installation of roof drains and vents.
2. Remove existing flashing and asphalt at existing drains in preparation for sealant and membrane.
3. Provide a smooth clean surface on the mating surface between the clamping ring and the drain base.

H. Edge Details:
1. Provide edge details as indicated on the Drawings. Install in accordance with the membrane manufacturer's requirements.
2. Join individual sections in accordance with the membrane manufacturer's requirements.
3. Coordinate installation of metal flashing and counter flashing specified in Section 07 62 00.
4. Manufactured Roof Specialties: Coordinate installation of copings, counter flashing systems, gutters, and roof expansion assemblies specified in Section 07 62 00.

I. Water cut-offs:
1. Provide water cut-offs on a daily basis at the completion of work and at the onset of inclement weather.
2. Provide water cut-offs to ensure that water does not flow beneath the completed sections of the new roofing system.
3. Remove water cut-offs prior to the resumption of work.
4. The integrity of the water cut-off is the sole responsibility of the roofing contractor.
5. Any membrane contaminated by the cut-off material shall be cleaned or removed.

3.4 FIELD QUALITY CONTROL

A. The membrane manufacturer's representative shall provide a comprehensive final inspection after completion of the roof system. All application errors shall be addressed and final punch list completed.

3.5 PROTECTION

A. Protect installed roofing products from construction operations until completion of project.

B. Where traffic is anticipated over completed roofing membrane, protect from damage using durable materials that are compatible with membrane.

C. Repair or replace damaged products after work is completed.

END OF SECTION

SECTION 07 62 00

SHEET METAL FLASHING AND TRIM

PART 1 GENERAL

1.1 SUMMARY

A. Section Includes: Provide galvanized steel flashing and sheet metal including accessories for a complete weather tight installation, including the following.
   1. Formed sheet metal flashings and fabrications, including the following:
      a. Parapet coping and wall cap flashings.
      b. Wall flashings.
      c. Roof penetration flashings.
      d. Roof termination flashings and counterflashings.
      e. Edge termination flashings.
      f. Head and sill flashings.
      g. Miscellaneous building sheet metal flashings.
      h. Gutters.
      i. Scuppers.
      j. Miscellaneous sheet metal fabrications.
   2. Manufactured reglets with removable counterflashings.
   3. Sealants associated with shop fabrication of sheet metal work.

1.2 REFERENCES

A. Sheet Metal and Air Conditioning Contractors National Association (SMACNA): Architectural Sheet Metal Manual, Fifth Edition.

B. ANSI/ASTM B32 - Solder Metal.

C. ASTM A525 - Steel Sheet, Zinc Coated, Galvanized by the Hot-Dip Process.

D. FS O-F-506 - Flux, Soldering, Paste and Liquid.

E. FS QQ-S-571 - Solder, Tin Alloy.

F. FS SS-C-153 - Cement, Bituminous, Plastic.

G. NAAMM - Metal Finishes Handbook.

H. NRCA (National Roofing Contractors Association) - Roofing Manual.

1.3 PERFORMANCE REQUIREMENTS

A. General: Install sheet metal flashing and trim to withstand wind loads, structural movement, thermally induced movement, and exposure to weather without failing, rattling, leaking, and fastener disengagement.

B. Fabricate and install roof edge flashing and copings capable of resisting the following forces according to recommendations in FMG Loss Prevention Data Sheet 1-49:
   1. Wind Zone 1: For velocity pressures of 21 to 30 lbf/sq. ft: 60 lbf/sq. ft. perimeter uplift

force, 90 lbf/sq. ft. corner uplift force, and 30 lbf/sq. ft. outward force.

C. Thermal Movements: Provide sheet metal flashing and trim that allow for thermal movements resulting from the following maximum change (range) in ambient and surface temperatures by preventing buckling, opening of joints, hole elongation, overstressing of components, failure of joint sealants, failure of connections, and other detrimental effects. Provide clips that resist rotation and avoid shear stress as a result of sheet metal and trim thermal movements. Base engineering calculation on surface temperatures of materials due to both solar heat gain and nighttime-sky heat loss.
   1. Temperature Change (Range): 120 deg. F, ambient; 180 deg F, material surfaces.

D. Water Infiltration: Provide sheet metal flashing and trim that do not allow water infiltration to building interior.

1.4 QUALITY ASSURANCE

A. Sheet Metal Flashing and Trim Standard: Comply with SMACNA's "Architectural Sheet Metal Manual". Conform to dimensions and profiles shown unless more stringent requirements are indicated.

B. Preinstallation Conference: Conduct conference at Project site
   1. Meet with County, installer and installer's whose work interfaces with or affects sheet metal flashing and trim including installers of roofing materials, roof accessories, and roof-mounted equipment.
   2. Review methods and procedures related to sheet metal flashing and trim.
   3. Examine substrate conditions for compliance with requirements, including flatness and attachment to structural members.
   4. Document proceedings, including corrective measures and action required, and furnish copy of record to each participant.

1.5 SUBMITTALS

A. Product Data
   1. Submit product data for each specified item.
   2. Describe material profile, jointing pattern, jointing details, fastening methods, and installation details.

B. Shop Drawings
   1. Clearly indicate dimensioning, layout, general construction details including closures, flashings, locations and types of sealants, anchorages, and method of anchorage.

C. Samples for Verification
   1. Provide full sized sample of metal flashing illustrating typical seam, external corner, internal corner, junction to vertical dissimilar surface, material, and finish.

D. Installation Instructions
   1. Submit manufacturer's installation instructions.

E. Mockup Samples: Build sheet metal mockups to demonstrate qualities of materials and execution and aesthetic effects of the following conditions. Include fasteners, cleats, clips, closures, and other attachments.
   1. Parapet coping flashings.
   2. Roof penetration flashings.
   3. Roof edge termination flashings.
   4. Door and window head and sill flashings.

5. Gutters.
6. Exposed trim and fascia.

1.6 DELIVERY, STORAGE, AND HANDLING

A. Deliver sheet metal flashing materials and fabrications undamaged. Protect sheet metal flashing and trim materials and fabrications during transportation and handling.

B. Unload, store, and install sheet metal flashing materials and fabrications in a manner to prevent bending, warping, twisting, and surface damage.

C. Stack materials on platforms or pallets, covered with suitable weathertight and ventilated covering. Do not store sheet metal flashing and trim materials in contact with other materials that might cause staining, denting, or other surface damage.

1.7 WARRANTY

A. Special Warranty: Provide for correcting failure of metal flashing system to resist penetration of water and damage from wind.
1. Special Warranty Period: Two years.

PART 2 PRODUCTS

2.1 MATERIALS

A. Galvanized Steel: Zinc-coated (galvanized) steel sheet, Class A250 coating. 24 gauge unless noted otherwise on drawings.

B. Aluminum: ASTM B209 minimum thickness .0603".

C. Lead Sheet: ASTM B749, Type L51121, copper-bearing, 4 lbs. per square foot.

2.2 ACCESSORIES

A. Flashing and Sheet Metal:
1. Provide heavier gauge metal where recommended by SMACNA Manual for size of component.
2. Mill phosphatized where indicated to be field painted.

B. Solder and Fasteners: As recommended by SMACNA and complying with applicable codes and regulations; hot dipped galvanized minimum coating comparable to G90.

C. Concealed Sealant: Butyl type for use in conjunction with sheet metal; non-staining; non-corrosive; non-shrinking and non-sagging; ultra-violet and ozone resistant for exterior concealed applications.

D. Separation Coating: Tremco 201/60R, Vulkem 201R.

E. Sealing Compound: Equal to Tremco/Vulkem 245.

F. Underlayment:
1. Waterproof: Grace “Vicor V40”.
2. Slip Sheet: Rosin sized paper – 3 lbs/10 sq. ft.

G. Fastener: Wood screws, annular threaded nails, self-tapping screws, self-locking rivets and bolts, and other suitable fasteners designed to withstand design loads.
   1. Exposed Fasteners: Heads matching color of sheet metal by means of plastic caps or factory-applied coating.
   2. Fasteners for Flashing and Trim: Blind fasteners or self-drilling screws, gasketed, with hex washer head.
   3. Blind Fasteners: High-strength aluminum or stainless-steel rivets.
   4. Spikes and Ferrules: Same material as gutter; with spike and ferrule matching internal gutter width.

H. Drawbands: Stainless-steel hose clamp; worm drive.

2.3 MANUFACTURED SHEET METAL FLASHING AND TRIM

A. Reglets: Units of type, material, and profile indicated, formed to provide secure interlocking of separate reglet and counterflashing pieces, and compatible with flashing indicated, with factory-mitered and –welded corners and junctions.
   1. Available Manufacturers: Subject to compliance with requirements, manufacturers offering products that may be incorporated into the Work include, but are not limited to the following:
      a. Fry Reglet Corporation
         1) Surface-Mounted Type: Model SM
         2) Stucco Type: Model ST
         3) Concrete Type: Model CO
         4) Masonry type: Model MA
   2. Material: Stainless Steel, 0.0188 inch thick (26 gauge).
   3. Surface-Mounted Type: Provide with slotted holes for fastening to substrate, with neoprene or other suitable weatherproofing washers, and with channel for sealant at top edge.
   4. Stucco Type: Provide with upturned fastening flange and extension leg of length to match thickness of applied finish materials.
   5. Concrete Type: Provide temporary closure tape to keep reglet free of concrete materials, special fasteners for attaching reglet to concrete forms, and guides to ensure alignment of reglet section ends.
   6. Masonry Type: Provide with offset top flange for embedment in masonry mortar joint.
   7. Flexible Flashing Retainer: Provide resilient plastic or rubber accessory to secure flexible flashing in reglet where clearance does not permit use of standard metal counterflashing or where drawings show reglet without metal counterflashing.
   8. Counterflashing Wind-Restraint Clips: Provide clips to be installed before counterflashing to prevent wind uplift of counter flashing lower edge.

2.4 FABRICATION

A. Fabricate sheet metal in accordance with SMACNA Architectural Sheet Metal Manual.

B. Form sections square, true and accurate to size, free from distortion and other defects detrimental to appearance or performance.
   1. Fabricate corners and intersections in shop with solder joints; watertight fabrication.

C. Form sections in longest practical lengths; make allowance for expansion at joints.

D. Hem exposed edges on underside 1/2"; miter and seam corners.

E. Backpaint flashings with heavy bodied bituminous paint to a minimum dry film thickness of 15 mil. where in contact with cementitious materials or dissimilar metals.

F. Form pitch pans watertight, with minimum 4" upstand and 4" flanges; form pans minimum 6" wider than item passing through roof membrane.

G. Form umbrella flashings with minimum 2" overhang, to shed water away from pitch pans.

H. Form material with standing seam. Solder and seal metal joints. After soldering, remove flux. Wipe and wash solder joints clean.

I. Fabricate vertical faces with bottom edge formed outward 1/4 inch and hemmed to form drip.

2.5 ROOF DRAINAGE SHEET METAL FABRICATIONS

A. Hanging Gutters: Fabricate to cross section indicated, complete with end pieces, outlet tubes, and other accessories as required. Fabricate from continuous pre-finished roll metal. Furnish flat-stock gutter spaces and gutter brackets fabricated from same metal as gutters, of size recommended by SMACNA but not less than twice the gutter thickness. Fabricate expansion joints, expansion joint covers, and gutter accessories from same metal as gutters.
   1. Material: Galvanized steel, unless otherwise indicated.
      a. Thickness: 0.0359 inch (20 gauge), except where indicated otherwise.
   2. Expansion Joints: Lap type.
   3. Accessories:
      a. Continuous removable metal gutter guard/leaf screen to prevent entry of leaves and debris into the gutter. Snap-In Gutter Guard/Cover, friction fit solid PVC cover.
      b. Gutter Straps, 2 inches wide at 36”o.c. in gauge matching gutter.

B. Downspouts: 3” dia. galv. steel pipe.

C. Parapet Scuppers: Fabricate scuppers of dimensions required with closure flange trim to exterior, 4-inch-wide wall flanges to interior, and base extending 4-inches beyond cant or tapered strip into field of roof. Fasten gravel guard angles to base of scupper.
   1. Material: Galvanized steel.
      a. Thickness: 0.0359 inch (20 gauge), except where indicated otherwise.

D. Conductor Heads: Fabricate conductor heads with flanged back and stiffened top edge and of dimensions and shape indicated, complete with outlet tubes and built-in overflows.
   1. Material: Galvanized Steel
      a. Thickness: 0.0359 inch (20 gauge), except where indicated otherwise.

2.6 LOW-SLOPE ROOF SHEET METAL FABRICATIONS

A. Roof Edge Flashing and Fascia Caps: Fabricate in minimum 96-inches long, but not exceeding 10-foot long sections. Furnish with 6-inch wide joint cover plates.
   1. Material: Galvanized steel.
      a. Thickness: 0.0299 inch (22 gauge).

B. Copings: Fabricate minimum of 96-inches long, but not exceeding 10-foot long, sections. Fabricate joint plates of same thickness as copings. Furnish with continuous cleats to support edge of external leg and drill elongated holes for fasteners on interior leg. Miter corners, seal, and solder or weld watertight.
   1. Material: Galvanized steel.
      a. Thickness: 0.0359 inch (20 gauge), except where indicated otherwise.
      b. Joint Style: Butt, with 12 inch wide concealed backup plate.

C. Base Flashings, Flashing Receivers, and Counterflashings:
   1. Material: Galvanized steel.

a. Thickness: 0.0299 inch (22 gauge).

D. Roof Drain Flashing:
1. Material: Lead.
a. Weight: 4.0 lb/sq. ft.

E. Vent Stack Roof Penetration:
1. Material: Lead.
a. Weight: 4.0 lb./sq. ft.

F. Splash Pans:
1. Material: Stainless steel.
a. Thickness: 0.0250 inch (24 gauge).

2.7 WALL FABRICATIONS

A. Openings Flashing in Frame Construction: Fabricate head, sill, and similar flashings to extend 4 inches beyond wall openings. Form head and sill flashing with 2-inch high end dams.
1. Material: Galvanized steel.
a. Thickness: 0.0299 inch (22 gauge).

2.8 FINISHES

A. Comply with NAAMM's "Metal Finishes Manual for Architectural and Metal Products" for recommendations for applying and designating finishes.

B. Protect mechanical and painted finishes on exposed surfaces from damage by applying a strippable, temporary protective covering before shipping.

C. Appearance of Finished Work: Variations in appearance of abutting or adjacent pieces are acceptable if they are within ½ of the range of approved samples. Noticeable variations in the same piece are not acceptable. Variations in appearance of other components are acceptable if they are within the range of approved samples and are assembled or installed to minimize contrast.

PART 3 EXECUTION

3.1 EXAMINATION

A. Examine substrates, areas, and conditions with installer present, to verify actual locations, dimensions, and other conditions affecting performance of work.
1. Verify that substrate is sound, dry, smooth, clean, sloped for drainage, and securely anchored.
2. Proceed with installation only after unsatisfactory conditions have been corrected.

3.2 INSTALLATION, GENERAL

A. General: Anchor sheet metal flashing and trim and other components of the work securely in place, with provisions for thermal and structural movement. Use fasteners, solder, welding rods, protective coatings, separators, sealants, and other miscellaneous items as required to complete sheet metal flashing and trim system.
1. Torch cutting of sheet metal flashing and trim is not permitted.

B. Metal Protection: Where dissimilar metals will contact each other or corrosive substrates, protect against galvanic action by painting contact surfaces with separation coating or by other permanent separation as recommended by fabricator or manufacturers of dissimilar metals.
   1. Coat sides of uncoated aluminum, stainless-steel, and lead sheet metal flashing and trim with separation coating where flashing and trim will contact wood, ferrous metal, or cementitious construction.
   2. Underlayment: Where installing metal flashing directly on cementitious or wood substrates, install a course of felt underlayment and cover with a slip sheet or install a course of polyethylene underlayment.
   3. Bed flanges in thick coat of asphalt roofing cement where required for waterproof performance.

C. Install exposed sheet metal flashing and trim without excessive oil canning, buckling, and tool marks.

D. Install sheet metal flashing and trim true to line and levels indicated. Provide uniform, neat seams with minimum exposure of solder, welds, and elastomeric sealant.

E. Install sheet metal flashing and trim to fit substrates and to result in watertight performance. Verify shapes and dimensions of surfaces to be covered before fabricating sheet metal.
   1. Space cleats not more than 12 inches apart, except where indicated as continuous. Anchor each cleat with two fasteners. Bend tabs over fasteners.

F. Expansion Provisions: Provide for thermal expansion of exposed flashing and trim. Space movement joints at a maximum of 10 feet with no joints allowed within 24 inches of corner of intersection. Where lapped or bayonet-type expansion, provisions cannot be used or would not be sufficiently watertight, form expansion joints of intermeshing hooked flanges, not less than 1 inch deep, filled with elastomeric sealant concealed with joints.

G. Fasteners: Use fasteners of sizes that will penetrate not less than 1-1/4 inches for nails and not less than ¾ inch for wood screws.
   1. Galvanized or Prepainted, Metallic-Coated Steel: Use stainless steel fasteners.
   2. Aluminum: Use aluminum or stainless steel fasteners.
   3. Stainless Steel: Use stainless steel fasteners.

H. Seal joints with elastomeric sealant as required for watertight construction.
   1. Where sealant-filled joints are used, embed hooked flanges of joint members not less than 1 inch into sealant. Form joints to completely conceal sealant. When ambient temperature at time of installation is moderate, between 40 and 70 deg F, set joint members for 50 percent movement either way. Adjust setting proportionately for installation at higher ambient temperatures. Do not install sealant-type joints at temperatures below 40 deg F.
   2. Prepare joints and apply sealants to comply with requirements in Section 07 92 00 “Joint Protection”.

I. Solder Joints: Clean surfaces to be soldered, removing oils and foreign matter. Pretin edges of sheets to be soldered to a width of 1-1/2 inches except where pretinned surface would show in finished work.
   1. Do not solder prepainted, metallic-coated steel and aluminum sheet.
   2. Pretinning is not required for lead.
   3. Do not use open-flame torches for soldering. Heat surfaces to receive solder and flow solder into joints. Fill joints completely. Completely remove flux and spatter from exposed surfaces.

3.3 ROOF DRAINAGE SYSTEM INSTALLATION

A. General: Install sheet metal roof drainage items to produce complete roof drainage system according to SMACNA recommendations and as indicated. Coordinate installation of roof perimeter flashing with installation of roof drainage system

B. Hanging Gutters: Join sections with riveted and soldered joints or with lapped joints sealed with elastomeric sealant. Provide for thermal expansion. Attach gutters at eave or fascia to firmly anchored gutter brackets or straps, as indicated, spaced not more than 36 inches apart. Provide end closures and seal watertight with sealant.
   1. Fasten gutter spacers to front and back of gutter.
   2. Loosely lock straps to front gutter bead and anchor to roof deck.
   3. Anchor and loosely lock back edge of gutter to continuous eave flashing.
   4. Anchor back of gutter that extends onto roof deck with cleats spaced not more than 24 inches apart.
   5. Anchor gutter with spikes and ferrules spaced not more than 24 inches apart.
   6. Install gutter with expansion joints at locations indicated but not exceeding 50 feet apart. Install expansion joint caps.
   7. Install continuous gutter screens or gutters with noncorrosive fasteners, removable for cleaning gutters.

C. Downspouts: Provide fasteners as required to hold downspout in place.
   1. Provide elbows as indicated.

D. Parapet Scuppers: Install scuppers where indicated through parapet. Continuously support scupper, set to correct elevation, and seal flanges to interior wall face, over cants or tapered edge strips, and under roofing membrane.
   1. Anchor scupper closure trim flange to exterior wall and seal or solder to scupper.

E. Conductor Heads: Anchor securely to wall with elevation of conductor head rim 1 inch below scupper or gutter discharge.

F. Splash Pans: Install where downspouts discharge on low-sloped roofs. Set in asphalt roofing cement or elastomeric sealant compatible with roofing membrane.

3.4 ROOF FLASHING INSTALLATION

A. General: Install sheet metal roof flashing and trim to comply with performance requirements, sheet metal manufacturer's written installation instructions, and SMACNA's "Architectural Sheet Metal Manual". Provide concealed fasteners where possible, set units true to line, and level as indicated. Install work with laps, joints, and seams that will be permanently watertight.

B. Roof Edge Flashing: Anchor to resist uplift and outward forces according to recommendations in FMG Loss Prevention Data Sheet 1-49 for specified wind zone as indicated.
   1. Interlock bottom edge of roof edge flashing with continuous cleats anchored to substrate at 24 inch centers.

C. Copings: Anchor to resist uplift and outward forces according to recommendations in FMG Loss Prevention Data Sheet 1-49 for specified wind zone and as indicated.
   1. Interlock exterior bottom edge of coping with continuous cleats anchored to substrate at 24 inch centers.
   2. Anchor interior leg of coping with screw fasteners and washers at 24 inch centers.

D. Pipe or Post Counterflashing: Install counterflashing umbrella with close fitting collar with top edge flared for elastomeric sealant, extending a minimum of 4 inches over base flashing. Install stainless steel drawband and tighten.

E. Counterflashing: Coordinate installation of counterflashing with installation of base flashing. Insert counterflashing in reglets or receivers and fit tightly to base flashing. Extend counterflashing 4 inches over base flashing. Lap counterflashing joints a minimum of 4 inches and bed with elastomeric sealant.
   1. Secure in waterproof manner by means of interlocking folded seam and sealant.

F. Roof Penetration Flashing: Coordinate installation of roof penetration flashing with installation of roofing and other items penetrating roof. Install flashing as follows:
   1. Turn lead flashing down tightly inside vent piping, as required to provide clear, unobstructed airflow.
   2. Seal with elastomeric sealant and clamp flashing to pipes penetrating roof except for lead flashing on vent piping.

3.5 WALL FLASHING INSTALLATION

A. General: Install sheet metal wall flashing to intercept and exclude penetrating moisture according to SMACNA recommendations and as indicated. Coordinate installation of wall flashing with installation of wall opening components such as windows, doors, and louvers.

B. Reglets: Install reglets in accordance with manufacturer's written instructions for applicable wall construction.

C. Openings Flashing in Frame Construction: Install continuous head, sill, and similar flashings to extend 4 inches beyond wall openings.

3.6 MISCELLANEOUS FLASHING INSTALLATION

A. Equipment Support Flashing: Coordinate installation of equipment support flashing with installation of roofing and equipment. Weld or seal flashing with elastomeric sealant to equipment support member.

3.7 CLEANING AND PROTECTION

A. Clean exposed metal surfaces of substances that interfere with uniform oxidation and weathering.

B. Clean and neutralize flux materials. Clean off excess solder and sealants.

C. Remove temporary protective coverings and strippable films as sheet metal flashing and trim are installed. On completion of installation, clean finished surfaces, including removing unused fasteners, metal filings, pop rivet stems, and pieces of flashing. Maintain a clean condition during construction.

D. Replace sheet metal flashing and trim that have been damaged or that have deteriorated beyond successful repair by finish touchup or similar repair procedures.

END OF SECTION

SECTION 07 72 00

ROOF ACCESSORIES

PART 1 GENERAL

1.1 SUMMARY

A. This Section includes the following:
   1. Roof hatches.

1.2 SUBMITTALS

A. Product Data: For each type of roof accessory indicated.

B. Shop Drawings: Show fabrication and installation details for roof accessories.

C. Samples: For each type of exposed factory-applied color finish required and for each type of roof accessory indicated, prepared on Samples of size to adequately show color.

1.3 QUALITY ASSURANCE

A. Sheet Metal Standard: Comply with SMACNA's "Architectural Sheet Metal Manual" details for fabrication of units, including flanges and cap flashing to coordinate with type of roofing indicated.

PART 2 PRODUCTS

2.1 MANUFACTURERS

A. Babcock-Davis; a Cierra Products Inc. Company.

B. Bilco Company (The).

C. Milcor Inc.

D. Or accepted equal.

2.2 METAL MATERIALS

A. Galvanized Steel Sheet: ASTM A 653/A 653M, G90 coated.

B. Aluminum-Zinc Alloy-Coated Steel Sheet: ASTM A 792/A 792M, AZ50 coated.

C. Prepainted, Metallic-Coated Steel Sheet: Steel sheet metallic coated by hot-dip process and prepainted by coil-coating process to comply with ASTM A 755/A 755M.
   1. Galvanized Steel Sheet: ASTM A 653/A 653M, G90 coated.
   2. Aluminum-Zinc Alloy-Coated Steel Sheet: ASTM A 792/A 792M, Class AZ50 coated.
   3. Exposed Finishes: Manufacturer's standard 2-coat, thermocured system consisting of specially formulated inhibitive primer and fluoropolymer color topcoat containing not less than 70 percent polyvinylidene fluoride resin by weight.

D. Stainless-Steel Shapes or Sheet: ASTM A 240/A 240M or ASTM A 666, Type 304 or Type 316, No. 2D finish.

2.3 ROOF HATCHES

A. Roof Hatches: Fabricate roof hatches with insulated double-wall lids and insulated double wall curb frame with integral deck mounting flange and lid frame counterflashing. Fabricate with welded or mechanically fastened and sealed corner joints. Provide continuous weathertight perimeter gasketing and equip with corrosion-resistant or hot-dip galvanized hardware.
1. Loads: Fabricate roof hatches to withstand 40-lbf/sq. ft. external and 20-lbf/sq. ft. internal loads.
2. Type and Size: Single-leaf lid, size to match existing hatch.
3. Curb and Lid Material: Galvanized steel sheet, 0.079 inch thick.
   a. Finish: Baked enamel.
4. Insulation: Polyisocyanurate board.
5. Interior Lid Liner: Manufacturer's standard metal liner of same material and finish as outer metal lid.
6. Exterior Curb Liner: Manufacturer's standard metal liner of same material and finish as metal curb.
7. On ribbed or fluted metal roofs, form flange at perimeter bottom to conform to roof profile.
8. Fabricate units to minimum height of 12 inches, unless otherwise indicated.
9. Sloping Roofs: Fabricate hatch curbs to be level when installed.
10. Hardware: Galvanized steel, spring latch with turn handles, butt- or pintle-type hinge system, and padlock hasps inside and outside.
11. Ladder Safety Post: Manufacturer's standard ladder safety post. Post to lock in place on full extension. Provide release mechanism to return post to closed position.
12. Safety Railing System: Manufacturer's standard complete system including rails, clamps, fasteners, safety barrier at railing opening, and all accessories required for a complete installation.

PART 3 EXECUTION

3.1 INSTALLATION

A. General: Install roof accessories according to manufacturer's written instructions. Anchor roof accessories securely in place and capable of resisting forces specified. Use fasteners, separators, sealants, and other miscellaneous items as required for completing roof accessory installation. Install roof accessories to resist exposure to weather without failing, rattling, leaking, and fastener disengagement.

B. Install roof accessories to fit substrates and to result in watertight performance.

C. Metal Protection: Where dissimilar metals will contact each other or corrosive substrates, protect against galvanic action by painting contact surfaces with bituminous coating or by other permanent separation as recommended by manufacturer.
1. Coat concealed side of uncoated aluminum or stainless-steel roof accessories with bituminous coating where in contact with wood, ferrous metal, or cementitious construction.
2. Underlayment: Where installing exposed-to-view components of roof accessories directly on cementitious or wood substrates, install a course of felt underlayment and cover with a slip sheet, or install a course of polyethylene underlayment.
3. Bed flanges in thick coat of asphalt roofing cement where required by roof accessory manufacturers for waterproof performance.

D. Install roof accessories level, plumb, true to line and elevation, and without warping, jogs in alignment, excessive oil canning, buckling, or tool marks.

E. Seal joints with elastomeric sealant as required by manufacturer of roof accessories.

END OF SECTION

SECTION 07 92 00

JOINT SEALANTS

PART 1 GENERAL

1.1 SUMMARY

A. Section Includes: Provide joint sealers, for interior and exterior joints not specified elsewhere, with backing rods and accessories as required for complete installation.
   1. Joint sealers include sealants and caulking as indicated.

1.2 SYSTEM DESCRIPTION

A. Performance Requirements:
   1. Select materials for compatibility with joint surfaces and indicated exposures.
   2. Where not indicated, select modulus of elasticity and hardness or grade recommended by manufacturer for each application indicated.
   3. Comply with applicable limitations on volatile organic compound (VOC) emissions.

1.3 SUBMITTALS

A. Product Data
   1. Submit product data for all specified products.
   2. Submit product data indicating sealant chemical characteristics, performance criteria, limitations, and color availability.

B. Samples for Verification
   1. Submit samples of specified products.

C. Installation Instructions
   1. Submit manufacturer's installation instructions
   2. Furnish certification indicating installers are trained in proper use of specified products, qualified, and familiar with proper installation techniques.

1.4 QUALITY ASSURANCE

A. Installer Qualifications: Firm with minimum five years successful experience on projects of similar type and size, using specified products.
   1. Installers shall be familiar with proper application procedures to ensure maximum joint sealer expansion and contraction capabilities.

1.5 DELIVERY, STORAGE, AND HANDLING

A. Deliver materials to site in original unopened containers or bundles with labels indicating manufacturer, product name and designation, color, expiration period for use, cure time, and mixing instructions.

1.6 SITE CONDITIONS

A. Do not proceed with installation of joint sealers under unfavorable weather conditions.

B. Install elastomeric sealants when temperature is in lower third of temperature range recommended by manufacturer.

C. Do not install solvent curing sealants in enclosed building spaces.

1.7 WARRANTY

A. Special Warranty: Repair or replace joint sealers that fail to perform as intended, because of leaking, crumbling, hardening, shrinkage, bleeding, sagging, staining and loss of adhesion.
   1. Special Warranty Period: Three years.

PART 2 PRODUCTS

2.1 MATERIALS

A. Elastomeric Sealants:
   1. Single Component Low Modulus Silicone Sealant: ASTM C920 Type S, Class 25, Grade NS; minimum 50% expansion and compaction capability.
      a. Provide at exterior locations not exposed to traffic (can be used at concrete expansion joints).
      b. Manufacturers:
         1) General Electric Co./Silpruf, Silglaz or GESIL.
         2) Dow Corning Corp./790 or 795.
         3) Pecora Corp./864 Architectural Silicone.
         4) Tremco/Spectrum 3.
         5) Or accepted equal.
   2. Multi-Component Polyurethane Sealant: ASTM C920, Type M, Grade P, Class 25, self-leveling; minimum 25% expansion and compaction capability.
      a. Provide following at traffic bearing locations (can be used at concrete expansion joints).
      b. Manufacturers:
         1) Pecora Corp./NR-200 Urexpan.
         2) Tremco/Vulkem 245.
         3) Sonneborn Division of ChemRex /SL 2
         4) Or accepted equal.
   3. Mildew-Resistant Silicone Rubber Sealant: ASTM C920, Type S, Grade NS, Class 25, compounded with fungicide, specifically for mildew resistance and recommended for interior joints in wet areas.
      a. Provide at interior joints in wet areas.
      b. Manufacturers:
         1) General Electric Co./SCS 1702 Sanitary Sealant.
         2) Dow Corning Corp./786 Bathtub Caulk.
         3) Pecora Corp./863 #345 White.
         4) Tremco/Tremsil 200.
         5) Or accepted equal.

B. Non-Elastomeric Sealants:
   1. Acrylic-Emulsion Sealant: ASTM C834 acrylic or latex-rubber-modified acrylic sealant, permanently flexible, non-staining and non-bleeding; recommended for general interior exposure; compatible with paints specified in Section 09 90 90.
      a. Provide at general interior applications.
      b. Manufacturers:
         1) Pecora Corp./AC-20.
         2) Sonneborn Division of ChemRex/Sonolac.
         3) Tremco/Ultrem 1500

4) Or accepted equal.

C. Miscellaneous Materials:
1. Primers/Sealers: Non-staining types recommended by joint sealer manufacturer for joint surfaces to be primed or sealed.
2. Joint Cleaners: Non-corrosive types recommended by joint sealer manufacturer; compatible with joint forming materials.
3. Bond Breaker Tape: Polyethylene tape as recommended by joint sealer manufacturer where bond to substrate or joint filler must be avoided for proper performance of joint sealer.
4. Sealant Backer Rod: Compressible polyethylene foam rod or other flexible, permanent, durable non-absorptive material as recommended by joint sealer manufacturer for compatibility with joint sealer.
   a. Oversize backer rod minimum 30% to 50% of joint opening.

D. Colors: Provide colors indicated or as selected by Architect from manufacturer's full range of colors.

PART 3 EXECUTION

3.1 PREPARATION

A. Prepare joint surfaces in accordance with ASTM C1193 and as recommended by joint sealer manufacturer.

B. Clean joint surfaces immediately before installation of joint sealer; remove dirt, insecure materials, moisture and other substances that could interfere with bond of joint sealer.

C. Prime or seal joint surfaces where recommended by joint sealer manufacturer; do not allow primer/sealer to spill or migrate onto adjoining surfaces.

D. Ensure protective coatings on surfaces in contact with joint sealers have been completely stripped.

3.2 INSTALLATION

A. Comply with manufacturer's printed instructions and ASTM C1193, except where more stringent requirements are shown or specified.

B. Set sealant backer rods at proper depth or position in joint to coordinate with other work, including installation of bond breakers and sealant; do not leave voids or gaps between ends of backer rods.
1. Do not stretch, twist, puncture or tear backer rods.

C. Install bond breaker tape where required by manufacturer's recommendations to ensure joint sealers will perform properly.

D. Size materials to achieve required width/depth ratios.

E. Employ installation techniques that will ensure joint sealers are deposited in uniform, continuous ribbons without gaps or air pockets, with complete "wetting" of bond surfaces equally on opposite sides.

F. Joint Configuration: Fill sealant joint to a slightly concave surface, slightly below adjoining

surfaces, unless otherwise indicated.

G. Where horizontal joints are between a horizontal surface and vertical surface, fill joint to form a slight cove, so that joint will not trap moisture or dirt.

H. Install joint sealers to depths recommended by joint sealer manufacturer but within the following general limitations, measured at center (thin) section of bead.
   1. Horizontal Joints: 75% width with minimum depth of 3/8".
   2. Elastomeric Joints: 50% width with minimum depth of 1/4".
   3. Non-Elastomeric Joints: 75% to 125% of joint width.

I. Spillage: Do not allow sealants or compounds to overflow or spill onto adjoining surfaces, or to migrate into voids of adjoining surfaces.
   1. Clean adjoining surfaces by whatever means may be necessary to eliminate evidence of spillage.

J. Cure joint sealers in compliance with manufacturer's instructions and recommendations to obtain high early bond strength, internal cohesive strength and surface durability.

K. Maintain finished joints free of embedded matter, ridges and sags.

3.3 CLEANING AND REPAIRING

A. Clean all work and adjacent soiled surfaces.

B. Repair of replace defaced or disfigured finishes caused by work of this Section.

3.4 PROTECTION OF FINISHED WORK

A. Protect sealants until cured.

END OF SECTION

SECTION 08 11 00

METAL DOORS AND FRAMES

PART 1 GENERAL

1.1 SUMMARY

A. Section Includes: Provide full flush steel doors and pressed steel frames, including anchors and silencers.

1.2 REFERENCES

A. Steel Door Institute (SDI): SDI-100 (ANSI/SDI A250.8) - Recommended Specifications - Standard Steel Doors and Frames.

B. National Association of Architectural Metal Manuf. (NAAMM): Hollow Metal Manual.

C. ANSI 117.1: Handicap Code

D. Underwriters Laboratories: Standards as applicable to fire rated doors and frames.
   1. Materials tested, labeled and inspected by Warnock Hersey International are acceptable upon approval of authorities.

1.3 SUBMITTALS

A. Product Data: Furnish manufacturer's literature.

B. Shop Drawings
   1. Submit complete shop drawings listing openings numerically by architect’s opening numbers showing product construction, sizes, anchors, reinforcing, cutouts, elevations, and finish.
   2. Submit notes with shop drawings indicating items that vary from plans and specifications, have conflicts for label compliance, are not in compliance with standards referenced above, have door, frame, hardware or function conflicts, or require review and clarification by architect.

C. Installation Instructions
   1. Submit installation instructions or field delivery receipt.
   2. Instructions for installation, maintenance, and preparation for field painting supplied with delivery of material to jobsite.

D. Schedule: Prepared by supplier, using same reference numbers for details and openings as those on Drawings.

1.4 DELIVERY, STORAGE AND PRODUCT PROTECTION

A. Doors and Frames will be delivered to the job site undamaged with the doors properly protected by cardboard and plastic covering and shall be stored in upright positions, 4 inches off the floor or ground with proper separation for air circulation and shall be stored inside or under complete weather protection. Damage not acknowledged at delivery shall be

considered job site damage and the responsibility of the contractor.

PART 2 PRODUCTS

2.1 MANUFACTURERS

A. Acceptable Steel Door Products:
1. Curries 747 Series
2. Steelcraft B14 Series
3. The Ceco Corporation High Frequency, Steel Stiffened
4. Or accepted equal

B. Acceptable Steel Frame Products:
1. Curries
2. Steelcraft
3. The Ceco Corporation
4. Or accepted equal

2.2 MATERIALS

A. Doors: Hollow metal flush steel door, 1-3/4" thick.
1. Interior Doors: Minimum 14 gage.
2. Exterior Doors: Minimum 14 gage galvanized.
3. Glazed and Louvered Doors: Provide systems as indicated on Drawings.
4. Fabricate doors from cold rolled, stretcher leveled, prime quality steel to sizes and designs as noted in the plans.
5. Door shall have full flush faces that will show no weld or fabrication marks when painted and viewed from an oblique angle. Stile and rail doors may have face seams at joints.
6. Doors shall be reinforced, stiffened, sound deadened, and insulated by one of the following methods providing the manufacturer furnishes a certification of tested compliance by a recognized testing laboratory to the minimum requirements noted below:
   a. 90 LB Phenolic Resin impregnated honeycomb core completely filling the inside of the door and laminated to the inside faces of the door panels.
   b. Steel hat channels at 6" centers welded to both faces and 14-gauge top and bottom welded in channels. Completely fill all internal voids with an inert material to sound deaden and insulate the door.
   c. Polystyrene foam permanently and fully bonded to the entire surface of face skins.
7. Minimum performance requirements:
   a. U Factor: Minimum .41
   b. STC Factor: Minimum 34
   c. Swing Test: ANSI A151.1 Level "A" 1,000,000 cycle test with twist test
   d. Corrosion: Pass ANSI A224.1
8. Reinforcement:
   a. Hinges: Minimum 8 gauge
   b. Locks: Minimum 16 gauge
   c. Surface Hardware: Minimum 12 gauge
   d. Panics fully reinforced - thru bolting not acceptable.
9. Construction: All out swinging exterior doors shall have top caps. Doors will be fully reinforced for all hardware to be surface applied and no hardware will be screwed to the surface skin of the door except kickplates, edging, push plates or nameplates.
10. Full glass doors (40% or more door face in glass) shall be constructed of 16 gauge steel closed tube type construction. Cutout in standard slab doors are not acceptable.
11. Door Design, Clearances, and Locations: Doors shall be beveled 1/8" in 2" at both

edges. Square edge doors and doors with loose hinge fillers will not be acceptable.
a. Hinge and strike clearance: 3/32"
b. Head: 1/8"
c. Floor: (unless otherwise noted) 3/4"
d. Meeting Stiles: 3/32"
e. Hardware locations: Comply with ADA and CBC requirements; refer to drawings.
f. Glazed Openings: Unless otherwise noted use bevel aluminum glass stop with removable snap-in stops on the non-security side. Provide steel glass stop per UL requirements on all label doors with screw-attached stops. Provide special steel glass stop for insulated glass designed to adequately secure glass. Glass stop shall fully surround door faces and seal inner core of door. The flanges shall not extend more than 1/16" from the face of the door. The hollow metal supplier shall reinforce any glass cutout adequately to insure that the door will have the same structural integrity as a flush door and that it will provide heavy-duty service considering the location, frequency of use and hardware to be installed. The hollow metal supplier shall assume responsibility for insuring that glazing stops to not conflict with flat bar panics.

B. Frames:
1. Exterior Frames: Welded (pre-assembled) type; minimum 14 gage, galvanized.
   a. Frames shall be full face welded, square, and accurately sized and have a welded spreader bar at the base for field removal. Acceptable tolerances per SDI 117.
2. Door Silencers: Manufacturer's standard resilient type; removable for replacement.

C. Glazing Stops: Full flush type with glass centered in opening, unsecured side integral with unit, secured side fastened with flush, countersunk Allen type fasteners; minimum 16 gage.

D. Jamb Anchors:
1. Stud-Wall Type: Designed to engage stud, welded to back of frames; not less than 0.042 inch thick.
   a. Locate anchors not more than 18 inches from top and bottom of frame. Space anchors not more than 32 inches o.c. and as follows:
      1) Three anchors per jamb up to 60 inches high
      2) Four anchors per jamb from 60 to 90 inches high
      3) Five anchors per jamb from 90 to 96 inches high
      4) Five anchors per jamb plus 1 additional anchor per jamb for each 24 inches or fraction thereof above 96 inches high
      5) Two anchors per head for frames more than 42 inches wide and mounted in metal-stud partitions.
2. Postinstalled Expansion Type for In-Place Concrete or Masonry: Minimum 3/8-inch dia. bolts with expansion shields or inserts. Provide pipe spacer from frame to wall, with throat reinforcement plate, welded to frame at each anchor location. Locate anchors not more than 6 inches from top and bottom of frame. Space anchors not more than 26 inches o.c.

E. Floor Anchors: Formed from same material as frames, not less than 0.042 inch thick, and as follows:
1. Monolithic Concrete Slabs: Clip-type anchors, with two holes to receive fasteners.

2.3 FABRICATION

A. Conform to requirements of SDI (ANSI A250 Series) or NAAMM.

B. Reinforce and prepare doors and frames to receive hardware.

1. Locate hardware as indicated, or if not indicated, according to ANSI/SDI A250.8.
2. Reinforce doors and frames to receive nontemplated, mortised and surface-mounted door hardware.
3. Comply with applicable requirements in ANSI/SDI A250.6 and ANSI/DHI A115 Series specifications for preparation of hollow metal work for hardware.
4. Coordinate locations of conduit and wiring boxes for electrical connections with Division 26 electrical Sections.

C. Frames:
1. Welded Frames: Accurately form and cut mitered corners of welded type frames; weld on inside surfaces; grind welded joints to smooth uniform finish.
2. Head Reinforcement: Reinforce frames wider than 4'-0" with minimum 12 gage formed steel channels welded in place, flush with top of frames.
3. Doors at Glazed Panels: Reinforce jambs and heads of frames for doors which occur adjacent to glazed sidelights and partitions.

D. Door Silencers:
1. Place minimum three single bumpers on single door frames; space equally along strike jambs.
2. Place minimum of two single bumpers on double door frames; place on frame heads.

E. Provide jamb anchors per SDI-100 (ANSI/SDI 250.8) and NAAMM; weld floor jamb anchors in place.

F. Provide double doors tested and approved without astragals.

G. Edge Clearances:
1. Between Doors and Frames: Maximum 1/8" at head and jambs.
2. Door Sills (No Threshold): Maximum 3/8".
3. Door Sills (Threshold): Maximum 3/4" above finished floor.
4. Between Edges of Pairs of Doors: Maximum 1/8".

H. Finish: Comply with requirements of Section 09 90 00 for primer including application and compatibility with specified finishes.
1. Interior Units: Prime paint.
2. Exterior Exposed Units: Apply minimum A60 non-spangle galvanized coating, ASTM A924 and A653.
   a. Surface treat after galvanizing to remove oils and prepare for painting and apply one coat of primer; comply with requirements in Section 09 90 00 – Painting and Coating.

PART 3 EXECUTION

3.1 INSTALLATION

A. Install doors and frames in accordance with SDI-100 (ANSI/SDI A250.8) and ANSI/SDI A250.11 or NAAMM "Hollow Metal Manual" and with manufacturer's recommendations and installation instructions.
1. Install fire rated units in conformance with fire label requirements and NFPA 80.

B. Install doors and frames plumb and square, and with maximum diagonal distortion of 1/16".
1. Coordinate hardware installation with requirements of Section 08 71 00.
2. Coordinate glass installation with requirements of Section 08 80 00.

C. Remove and replace doors and frames damaged during delivery, storage, installation and construction.
   1. Paste filler repair shall not be permitted.

D. After installation, touch-up scratched paint surfaces.

END OF SECTION

SECTION 08 14 23.16

PLASTIC-LAMINATE-FACED WOOD DOORS

PART 1 GENERAL

1.1 SUMMARY

A. Section Includes:
   1. Provide plastic laminate-faced doors.

1.2 REFERENCES

A. AWI Quality Standards of Architectural Woodwork Institute.

B. NWMA Standard Procedures and Recommendations for Factory Machining Architectural and Plastic Faced Flush Doors for Hardware.

C. Underwriters Laboratories Inc. (UL): Building Materials Directory.
   1. Materials tested, labeled and inspected by Warnock Hersey International are acceptable upon approval of authorities.

D. Factory Mutual Engineering Corporation (FM), as applicable to fire rated wood doors.

E. DHI - Door Hardware Institute: “Installation Guide for Doors and Hardware”.

F. NFPA 80 – National Fire Protection Association.

1.3 REGULATORY REQUIREMENTS

A. Architectural wood doors furnished for this project shall be in full compliance with the CBC, NFPA 80, NFPA 101, NFPA 105 and ADA.

1.4 SUBMITTALS

A. Product Data: Furnish manufacturer's literature.

B. Shop Drawings: Indicate general construction, jointing methods, hardware locations, and locations of cut-outs.
   1. For doors with glazed lites, indicate clearly the typed, materials, and fire ratings of glass stops proposed.

C. Samples:
   1. Furnish sample of door corner indicating panel configuration.
   2. Submit two door corner samples in specified plastic laminate finish, including edge laminate, for each type of door construction required (i.e. fire-rated).

1.5 PROJECT CONDITIONS

A. Do not deliver or install doors until conditions for temperature and relative humidity have been stabilized in accordance with referenced standards requirements applicable to Project location.

1.6 WARRANTY

A. Special Warranty: Provide for replacing, rehanging and refinishing wood doors exhibiting defects in materials or workmanship including warp and delamination.
   1. Special Warranty Period: Five years.

PART 2 PRODUCTS

2.1 MANUFACTURERS

A. Weyerhaeuser Company.

B. Eggers Industries.

C. Algoma Hardwoods, Inc.

D. Or accepted equal

2.2 MATERIALS

A. Construction:
   1. 5 ply hot press construction or 7 ply cold press construction
   2. Core glue bonded to stiles and rails then thickness sanded prior to door lay-up. No mechanical fasteners may be used.
   3. Institutional solid particle board core.
   4. SLM edges with veneer covering and SLM blocking for hardware.
   5. Provide doors made with adhesives and composite wood products that do not contain urea-formaldehyde resins.

B. Plastic Laminate Faces:
   1. Decorative 3-ply laminate face from the following manufacturers: Formica, Nevamar or Wilsonart.
   2. High pressure decorative laminate general purpose grade 50 (GP50 - .050“ thick). complying with NEMA standard LD-3.
   3. Apply faces prior to edges, ease all corners.

2.3 ACCESSORIES:

A. Metal louvers

B. Metal astragals at pairs.

C. Glazing stops - lip stop matching hardwood at non label and 20 min. label doors.

D. Metal glazing stops at \ door lights.

E. Glazed Openings: Glaze doors at factory with glass of type and thickness indicated, complying with Division 08 Section "Glazing."

2.4 FABRICATION

A. Fabricate doors in accordance with requirements of specified standards.

1. Prefit wood doors.
2. Prepare doors to receive hardware.
3. Factory machine doors for mortise hardware.

B. Bevel strike edge of single-acting doors, 1/8" in 2".

PART 3 EXECUTION

3.1 INSTALLATION

A. Install wood doors in accordance with manufacturer's recommendations and installation instructions, and reference standards, plumb and square, and with maximum diagonal distortion of 1/16".
   1. Coordinate hardware installation.

B. Rehang or replace doors that do not swing or operate freely.

C. Protection: Protect doors as recommended by door manufacturer to ensure doors are without damage at time of Substantial Completion.

END OF SECTION

SECTION 08 31 13

ACCESS DOORS AND FRAMES

PART 1 GENERAL

1.1 SUMMARY

A. Section Includes: Provide access doors set in finished surfaces.
   1. Provide access doors and panels as required for access to controls and valves behind finished surfaces.
   2. Provide access doors to concealed attic spaces.
   3. Coordinate with various trades for controls and valves that may be concealed.

1.2 SUBMITTALS

A. Product Data: Furnish manufacturer's literature.

B. Shop Drawings: Indicate locations of access doors required but not indicated on Architectural Drawings.

PART 2 PRODUCTS

2.1 MANUFACTURERS

A. Nystrom Building Products.

B. Milcor, Inc.

C. J.L. Industries.

D. Karp Associates, Inc.

E. Or accepted equal.

2.2 MATERIALS

A. General: Provide access door assemblies consisting of an integral unit, complete and ready for installation.
   1. Flush panel access doors; provide type with frame flange concealed in finished construction.

B. Frames: Fabricate from minimum 16 gage steel.

C. Doors: Flush panel type, fabricate from minimum 14 gage steel.
   1. Provide continuous piano type hinge.
   2. Finish with manufacturer's factory-applied enamel prime coat applied over phosphate coating on steel.

D. Locking Devices: Provide flush, key-operated cylinder lock for each access door; provide two keys per lock and key locks alike, unless otherwise scheduled.

2.3 FABRICATION

A. Size Variations: Obtain Architect's acceptance of manufacturer's standard size units that may vary slightly from sizes shown or scheduled.

B. Fabricate units of continuous welded steel construction; grind welds smooth and flush with adjacent surfaces.

C. Provide attachment devices and fasteners of type required for specific job conditions.

PART 3 EXECUTION

3.1 EXAMINATION

A. Examine areas and conditions under which access doors are to be installed.
   1. Do not proceed with work until unsatisfactory conditions are corrected; installation signifies acceptance of conditions.

B. Obtain specific locations and sizes for required access doors from trades requiring access to concealed equipment; coordinate installation with work of other trades.

3.2 INSTALLATION

A. Comply with manufacturer's installation instructions for access doors.
   1. Install fire rated access doors in accordance with NFPA 80.

B. Set frames accurately in position and securely attach to supports with face panels plumb or level in relation to adjacent finish surfaces.

C. Adjust hardware and doors after installation for proper operation.

3.3 PROTECTION

A. Remove and replace doors and frames that are warped, bowed, or otherwise damaged.

END OF SECTION

SECTION 08 33 13

COILING COUNTER DOORS

PART 1 GENERAL

1.1 SECTION INCLUDES

A. Overhead Coiling Counter Doors, manually operated.

1.2 REFERENCES

A. ASTM A 653 - Standard Specification for Steel Sheet, Zinc-Coated (Galvanized) or Zinc-Iron Alloy-Coated (Galvannealed) by the Hot-Dip Process.

B. ASTM A 666 - Standard Specification for Austenitic Stainless Steel Sheet, Strip, Plate, and Flat Bar.

C. ASTM A 924 - Standard Specification for General Requirements for Steel Sheet, Metallic-Coated by the Hot-Dip Process.

D. ASTM B 221 - Standard Specification for Aluminum and Aluminum-Alloy Extruded Bars, Rods, Wire, Profiles, and Tubes.

E. ASTM B 221 - Standard Specification for Aluminum and Aluminum-Alloy Extruded Bars, Rods, Wire, Profiles, and Tubes (Metric).

1.3 SUBMITTALS

A. Product Data: Manufacturer's data sheets on each product to be used, including:
   1. Preparation instructions and recommendations.
   2. Storage and handling requirements and recommendations.
   3. Details of construction and fabrication.
   4. Installation methods.

B. Shop Drawings: Include detailed plans, elevations, details of framing members, required clearances, anchors, and accessories. Include relationship with adjacent construction.

C. Verification Samples: For each finish product specified, two samples, minimum size 6 inches (150 mm) long, representing actual product, color, and patterns.

D. Manufacturer's Certificates: Certify products meet or exceed specified requirements.

1.4 QUALITY ASSURANCE

A. Manufacturer Qualifications: Company specializing in performing Work of this section with a minimum of five years experience in the fabrication and installation of security closures.

B. Installer Qualifications: Company specializing in performing Work of this section with minimum three years and approved by manufacturer.

1.5 DELIVERY, STORAGE, AND HANDLING

A. Store products in manufacturer's unopened packaging until ready for installation.

B. Protect materials from exposure to moisture. Do not deliver until after wet work is complete and dry.

C. Store materials in a dry, warm, ventilated weather tight location.

1.6 PROJECT CONDITIONS

A. Maintain environmental conditions (temperature, humidity, and ventilation) within limits recommended by manufacturer for optimum results. Do not install products under environmental conditions outside manufacturer's absolute limits.

1.7 COORDINATION

A. Coordinate Work with other operations and installation of adjacent finish materials to avoid damage to installed materials.

1.8 WARRANTY

A. Warranty: Manufacturer’s door warranty for 5 years for all parts and components.

PART 2 PRODUCTS

2.1 MANUFACTURERS

A. Acceptable Manufacturer:
   1. Overhead Door Corp.
   2. Or accepted equal.

2.2 OVERHEAD COILING STEEL COUNTER DOORS

A. Stainless Steel Counter Doors: Overhead Door Corporation, 651 Series.
   1. Wall Mounting Condition:
      a. Between jambs mounting.
   2. Curtain: Interlocking slats, Type F-158 fabricated of 22 gauge stainless steel. Endlocks attached to alternate slats to maintain curtain alignment and prevent lateral slat movement.
   3. Finish:
      a. Slats and hood stainless steel with a No. 4 stainless steel finish.
      b. Non-galvanized exposed ferrous surfaces shall receive one coat of rust-inhibitive primer.
   4. Bottom Bar: Single stainless steel angle bottom bar.
   5. Guides:
      c. Stainless steel shapes.
   6. Brackets: Steel plate to support counterbalance, curtain and hood.
   7. Counterbalance: Helical torsion spring type housed in a steel tube or pipe barrel.
   8. Hood: Provided with intermediate support brackets as required and fabricated of:
      a. Stainless steel.
   9. Operation:
      b. Crank operation.
   10. Locking:
      a. Slide bolt locks suitable for use with padlock.

PART 3 EXECUTION

3.1 EXAMINATION

A. Verify opening sizes, tolerances and conditions are acceptable.

B. Examine conditions of substrates, supports, and other conditions under which this work is to be performed.

C. If substrate preparation is the responsibility of another installer, notify Architect of unsatisfactory preparation before proceeding.

3.2 PREPARATION

A. Clean surfaces thoroughly prior to installation.

B. Prepare surfaces using the methods recommended by the manufacturer for achieving the best result for the substrate under the project conditions.

3.3 INSTALLATION

A. Install in accordance with manufacturer's instructions.

B. Use anchorage devices to securely fasten assembly to wall construction and building framing without distortion or stress.

C. Securely and rigidly brace components suspended from structure. Secure guides to structural members only.

D. Fit and align assembly including hardware; level and plumb, to provide smooth operation.

E. Coordinate installation of sealants and backing materials at frame.

F. Install perimeter trim and closures.

3.4 ADJUSTING

A. Test for proper operation and adjust as necessary to provide proper operation without binding or distortion.

B. Adjust hardware and operating assemblies for smooth and noiseless operation.

3.5 CLEANING

A. Clean curtain and components using non-abrasive materials and methods recommended by manufacturer.

B. Remove labels and visible markings.

C. Touch-up, repair or replace damaged products before Substantial Completion.

3.6 PROTECTION

A. Protect installed products until completion of project.

END OF SECTION

SECTION 08 52 30

FIXED CLAD WOOD WINDOWS

PART 1 GENERAL

1.1 SUMMARY

A. Section Includes: Aluminum clad wood windows and doors.

1.2 REFERENCES

A. American Architectural Manufacturers Association (AAMA):
1. AAMA/WDMA/CSA 101/I.S.2/A440-08 "NAFS - North American Fenestration Standard/Specification for windows, doors and skylights."
2. AAMA/WDMA/CSA 101/I.S.2/A440-11 "NAFS 2011 – North American Fenestration Standard/Specification for windows, doors and skylights."
3. AAMA 2604 "Voluntary Specification, Performance Requirements and Test Procedures for High Performance Organic Coatings on Aluminum Extrusions and Panels."
4. AAMA 2605 "Voluntary Specification, Performance Requirements and Test Procedures for Superior Performing Organic Coatings on Aluminum Extrusions and Panels."

B. American National Standards Institute (ANSI):
1. ANSI Z97.1 "Safety Glazing Materials Used in Buildings – Safety Performance Specifications and Methods of Test."

C. American Society for Testing and Materials (ASTM):
1. ASTM B 136 "Standard for Measurement of Stain Resistance of Anodic Coatings on Aluminum."
2. ASTM B 137 "Standard for Measurement of Coating Mass Per Unit Area on Anodically Coated Aluminum."
3. ASTM B 244 "Standard for Measurement of Thickness of Anodic Coatings on Aluminum and of Other Nonconductive Coatings or Nonmagnetic Basis Metals with Eddy Current Instruments."
4. ASTM C 1036 "Standard Specification for Flat Glass."
5. ASTM C 1048 "Standard Specification for Heat-Treated Flat Glass – Kind HS, Kind FT Coated and Uncoated Glass."
6. ASTM D 3359 "Standard Test Methods for Measuring Adhesion by Tape Test."
7. ASTM D 5235 "Standard Test Method for Microscopical Measurement of Dry Film Thickness of Coatings on Wood Products."
8. ASTM D 5572 "Standard Specification for Adhesives Used for Finger Joints in Nonstructural Lumber Products."
9. ASTM D 5751 "Standard Specification for Laminate Joints in Nonstructural Lumber Products."
10. ASTM E 283 "Standard Test Method for Rate of Air Leakage Through Exterior Windows, Curtain Walls, and Doors."
11. ASTM E 330 "Standard Test Method for Structural Performance of Exterior Windows, Curtain Walls, and Doors by Uniform Static Air Pressure Difference."
12. ASTM E 547 "Standard Test Method for Water Penetration of Exterior Windows, Curtain Walls, and Doors by Cyclic Static Air Pressure Differential."

D. Canadian Standards Association

1. AAMA/WDMA/CSA 101./I.S.2/A440-08 "NAFS – North American Fenestration Standard/Specification for windows, doors and skylights."
2. CSA A440S1-09 "Canadian Supplement to AAMA/WDMA/CSA 101/I.S.2/A440, NAFS – North American Fenestration Standard/Specification for windows, doors and skylights."

E. Consumer Products Safety Commission:
1. 16 CFR, Part 1201 "Safety Standard for Architectural Glazing Material."

F. National Fenestration Rating Council (NFRC):
1. NFRC 100 "Procedure for Determining Fenestration Products U-Factors."
2. NFRC 200 "Procedure for Determining Fenestration Product Solar Heat Gain Coefficients at Normal Incidence."
3. NFRC 300 "Procedure for Determining Solar Optical Properties of Simple Fenestration Product."

G. Window and Door Manufacturers Association (WDMA):
1. AAMA/WDMA/CSA 101/I.S.2/A440-08 "NAFS - North American Fenestration Standard/Specification for windows, doors and skylights."
2. AAMA/WDMA/CSA 101/I.S.2/A440-11 "NAFS 2011 – North American Fenestration Standard/Specification for windows, doors and skylights."
3. WDMA I.S.4 "Industry Standard for Water Repellant Preservative Non-Pressure Treatment for Millwork."

1.3 DEFINITIONS

A. U Cog: Units Btu/(hr•ft^2•°F), center-of-glass U value. Center-of-glass is the central glazed portion of the window which one sees through that is more than 2.5 inches from sightline.

B. U/R Total: Value of total unit calculated per NFRC 100 using window and frame. U Factor is the primary measure of winter energy efficiency. A low U Factor means less heat passes through the unit due to exterior air and room-side air temperature differences. R Value = 1/U.

C. SHGC: The solar heat gain coefficient of the total fenestration system represents the solar heat gain through the system relative to the incident solar radiation striking the exterior surface. Solar Heat Gain Ratings are determined in accordance with NFRC 200.

D. Vtc: The visible transmittance of the total fenestration system is the transmittance across the visible portion of the solar spectrum where sensitivity to each wave length is weighted by the eye's response. Visible Transmittance Ratings are determined in accordance with NFRC 300.

1.4 THERMAL PERFORMANCE RATING

A. Glazing Type and Finish: [clad.]
1. Maximum total value = 0.30
2. Maximum Solar Heat Gain Coefficient (SHGC) = 0.30

1.5 COATING PERFORMANCE

A. Primer shall comply with testing in accordance with ASTM D 3359 and ASTM D 5235.

1.6 SUBMITTALS

A. Product Data: Include the following for each type of window and door required.

1. Construction details and fabrication methods.
2. Profiles and dimensions of individual components.
3. Data on accessories and finishes.
4. Recommendations for maintenance and cleaning of exposed surfaces.

B. Shop Drawings: Include information not fully detailed in manufacturer's product data and include the following for each type of window required.
1. Layout and installation details, including anchors.
2. Elevations at 1/4 inch = 1 foot (1:50) scale and typical window unit elevations at 3/4 inch = 1 foot (1:20) scale.
3. Full size section details of typical composite members, including reinforcement and stiffeners.
4. Glazing details.
5. Accessories.

C. Samples: Submit one corner section. Submit color samples as appropriate.

1.7 QUALITY ASSURANCE

A. Manufacturer Qualifications: Manufacturer shall have produced types of windows specified for not less than ten years, with similar projects that have been in successful use for not less than ten years.

B. Obtain wood window units through one source from a single manufacturer.

C. Safety Glass Standard: Provide products complying with testing requirements of United States Consumer Product Safety Commission's 16 CFR, Part 1201 for Category II materials or as prescribed by local codes. Provide products complying with ANSI Z97.1.
1. Subject to compliance with project requirements, provide safety glass permanently marked with certification label of Safety Glazing Certification Council or another certification agency acceptable to authorities having jurisdiction.

D. Insulated Glass Certification: Provide insulated glass units permanently marked on spacers or on at least one component pane of units with appropriate certification label of inspecting agency.

1.8 DELIVERY, STORAGE, AND HANDLING

A. Ship units with both temporary and permanent NFRC labeling.
1. Temporary label shall indicate that the unit is NFRC certified and include brief product description and thermal or energy performance values.
2. Permanent label shall include manufacturer identification and performance tracking for life of product.

B. Deliver in original packaging, undamaged, with instructions.

C. Store off ground and protect from weather.

1.9 WARRANTY

A. Warranty: Provide manufacturer's standard warranty as follows:
1. Workmanship and Materials: 10-year limited warranty.
2. Insulating Glass: 20-year limited warranty (Residential and Commercial).
3. Exterior Clad Finish:

a. 20-year limited warranty on metal clad coating against cracking, checking, color change, chalking, or peeling (adhesion loss) in normal conditions; 10 year limited warranty on metal clad coating against cracking, checking, color change, chalking or peeling (adhesion loss) in extreme conditions.

4. Interior Finish: 2-year limited warranty.
5. Warranty Labor: 2-year limited warranty.

PART 2PRODUCTS

2.1 MANUFACTURERS

A. **Sierra Pacific Windows**

B. Or accepted equal.

2.2 MATERIALS

A. Wood:
1. Species: Douglas Fir, kiln dried to moisture content of 6 to 12 percent at time of fabrication; water-repellent preservative treated in accordance with WDMA I.S.4.
2. Interior Exposed Wood: Solid clear, suitable for staining.

B. Aluminum Cladding: 0.062 inch thick extruded 6063 T5 grade aluminum.

C. Glazing: Provide manufacturer's standard glazing material.
1. Float Glass: ASTM C 1036, glazing select quality, ¼ inch thick.
2. Safety Glass: ASTM C 1048, glazing select quality, Kind FT (Fully Tempered) 1/4 inch thick.
3. Insulated Glass (IG): Outer pane of 1/4; inner pane of 1/4; 1/4 inch total thickness separated by 1/2 inch Super Spacer® from Quanex.

2.3 COMPONENTS

A. Drip Cap: Extruded aluminum clad drip cap factory mounted to frame.

2.4 FABRICATION

A. Jamb:
1. Basic Jamb Width: 4-9/16 inches.
2. Factory apply clear extension jambs; one piece extension. Full depth of jambs.

B. Glued and Laminated Components: Comply with ASTM D 5572 and ASTM D 5751.

C. Cladding:
1. Clad exterior wood surfaces with extruded 0.065 inch aluminum.
2. Seal clad frame corners with silicone, along with butyl pads, and secure with stainless steel screws.
3. Fabricate frame extrusion with continuous integral nail flange and with interior wall for increased stability.
4. Fabricate exterior of frame with accessory groove to accept retrofit trim system or clad brickmould and sill nosing.

D. Glazing:

1. Fabricate window unit with simulite and back bedded with a structural sealant and glazing tape.]
2. Fabricate unit with the glass secured in place from the interior with a contemporary two-piece removable glazing bead and glass stop.
3. Fabricate insulated glass with internal shadow bar to create appearance of true divided lites.

E. Muntins:
1. Fabricate interior simulated divided lite (simulite) bars of wood.
2. Fabricate exterior simulated divided lite (simulate) bars of aluminum clad.
3. Permanently apply muntins to both interior and exterior of glass surface using VHB acrylic adhesive tape.
4. Muntin Profile and Width:
   a. Traditional:1inch.

2.5 FINISHES

A. Interior Exposed Wood: Unfinished for field staining.

B. Exterior Finish Cladding: To be manufacturer’s pre-treated aluminum surface with baked on, electrostatically applied super durable polyester powder paint, zero-VOC finish conforming to specified AAMA 2604 or AAMA 2605 test procedures.
1. Manufacturer’s 100% fluoropolymer powder; 1.5 to 2.5 mil dry film thickness.
   a. Factory finish to comply with AAMA 2605. Color selected from manufacturer’s entire collection of colors.

C. Drip Cap: Match frame color.

PART 3 EXECUTION

3.1 EXAMINATION

A. Site Verification of Conditions: Verify installation conditions previously established under other sections are acceptable for product installation in accordance with manufacturer's instructions.

B. Verify that field measurements are acceptable to suit window unit tolerances.

C. Verify sill plate is level.

D. Verify supports and anchors are correctly and securely positioned.

E. Verify masonry surfaces are dry and free of construction debris.

F. Verify wood frame walls are dry, clean, sound, well-nailed, free of voids, and without offsets at joints. Ensure that nail heads are driven flush with surfaces in opening and within 3 inches of corner.

G. Scheduling of installation implies that substrate and conditions are prepared and ready for product installation. Proceeding with installation implies installer’s acceptance of substrate and conditions.

3.2 PREPARATION

A. Coordinate window installation with wall flashings and other built-in components.

3.3 INSTALLATION

A. Install window units and components in accordance with manufacturer's instructions and approved shop drawings, in compliance with specified performance requirements, and to provide weather-tight construction.

B. Anchor components rigidly and securely to building structure, plumb and level, accurately fitted, and free from distortion or defects.

C. Fit exposed connections to form tight hairline joints.

3.4 CLEANING

A. Clean interior and exterior surfaces immediately after installation in accordance with manufacturer's recommendations for cleaning and maintenance.

B. Remove temporary labels from surfaces.

C. Remove and replace glass damaged during construction period.

3.5 PROTECTION

A. Protect window units from damage or deterioration until Substantial Completion.

END OF SECTION

SECTION 08 71 00

DOOR HARDWARE

PART 1 GENERAL

1.1 SUMMARY

A. Section Includes: Provide hardware for hollow metal and wood doors.

1.2 REFERENCES

A. ANSI A115 and A115W Series: Door and Frame Preparation Standards.

B. ANSI A156.1 through A156.20: Standards for various hardware items.

C. National Fire Protection Association: NFPA 80, Fire Doors and Windows.

D. California Building Code: California Code of Regulations, Title 24, Part 2.

E. Americans with Disabilities Act Accessibility Guidelines (ADAAG).

1.3 SYSTEM DESCRIPTION

A. Products: Provide each type of hardware (hinges, pivots, locksets, latchsets, closers, trim) from single manufacturer unless otherwise indicated in Hardware Schedule.
   1. Provide products by manufacturers specified and manufacturers listed in Hardware Schedule, with references to catalog numbers and designations.

B. Access for Persons with Disabilities: Comply with California Building Code and Americans with Disabilities Act Accessibility Guidelines (ADAAG).

1.4 SUBMITTALS

A. Product Data/Cut Sheets: Submit catalog cuts for each type of hardware.

B. Shop Drawings: Indicate locations and mounting heights of hardware.
   1. Supply templates to door and frame manufacturers for proper and accurate sizing and locations of cut-outs for hardware.

C. Samples: Indicate required style and finish of exposed door hardware.

D. Hardware Schedule: Prepare a vertical schedule of hardware:
   1. Door numbers must be in numerical sequence.
   2. List each opening, door size, door hand, door and frame material, description of to and from, manufacturer’s numbers and finish.
   3. Provide seven copies of this schedule and three sets of catalog cut sheets.
   4. Hardware supplier shall retype schedule when changes occur during the project and supply new schedules, at no additional expense.

E. Keying Schedule: Coordinate directly with Owner's Representative.

F. Closeout Submittal: Record actual locations of installed cylinders and master key codes on Project Record Documents.

1.5 QUALITY ASSURANCE

A. Supplier Qualifications: Recognized builder's hardware supplier with minimum five year's successful experience in scheduling and furnishing hardware.
   1. Provide services of architectural hardware consultant to supervise hardware supply.

B. Pre-Installation Meeting: Convene pre-installation meeting prior to commencing work of this section. Include persons involved with installation of doors, frames, and hardware.

C. Upon receipt of approved Hardware Schedule, architectural hardware consultant shall attend keying conference with Owner and Architect.

1.6 DELIVERY, STORAGE, AND HANDLING

A. Deliver hardware in manufacturer's original packages, marked for intended opening and use.

B. Pack complete with necessary screws, bolts, keys, instructions, and installation template, if necessary, for spotting mortising tools.

C. Upon delivery, furnish complete list of hardware for checking, clearly marked to correspond with marking on each package.
   1. Review list for completeness and accuracy.

1.7 OPERATION AND MAINTENANCE DATA

A. Provide manufacturer's parts list and maintenance instructions for each type of hardware supplied and necessary wrenches and tools required for proper maintenance of hardware.

B. Contractor will provide owner with all wrenches and tools included with hardware including extra screws.

1.8 WARRANTY

A. Provide 1-year warranty covering products and workmanship. Warranty period for closers shall be 10 years.

PART 2 PRODUCTS

2.1 MATERIALS

A. General: Review Drawings for hardware group locations and door types; where not fully covered in Hardware Schedule, comply with following general requirements; inform Architect where conflicts occur.
   1. Provide hardware items with accessories complete to function as intended.

B. Hinges and Butts: ANSI A156.1; comply with following unless otherwise indicated.
   1. Manufacturers:
      a. McKinney Products Co., Division of Essex Industries.
      b. Stanley Hardware Division of Stanley Works.
      c. Or accepted equal.
   2. Doors 1-3/4" Thick: 4-1/2" heavy weight, extra heavy weight ball or oilite bearing where

over 40" wide.
   a. Provide widths sufficient to clear trim projection when door swings 180 degrees.
   b. Doors 1-3/8" Thick: 3-1/2" size.
3. Provide minimum 3 hinges to 90" high, 4 hinges to 120" high for each door leaf, unless otherwise indicated.
   a. Two hinges acceptable for interior hollow core wood doors and for doors less than 36” high.
4. Provide nonferrous butts with non-removable pins at exterior and locked outswinging doors, non-rising at interior doors; stainless steel where labeled; steel butts at labeled interior doors.
5. Provide ball bearing or oilite bearing hinges at doors with closers.
6. Tips: Flat button tips with matching plug.

C. Locking Devices: Provide of metal matching specified finish; interior parts of steel and zinc-dichromate plating, to resist rusting and corrosion; do not supply plastic, die-cast or aluminum mechanisms.
1. Manufacturers:
   a. Schlage Lock Co.
   b. Or accepted equal
2. Type:
   a. Mortise Locksets: ANSI A156.13, Series 1000, Grade 1, Mortise Type with 6 pin tumbler cylinders, except where otherwise indicated in Hardware Schedule.
   b. Cylindrical Locksets: ANSI A156.2, Grade 2, privacy type Bored Type, except where otherwise indicated in Hardware Schedule.
   c. Cylindrical Latchsets: ANSI A156.2, Grade 2, Bored Type (cylindrical), except where otherwise indicated in Hardware Schedule.
   d. Exit/Panic Devices: ANSI A156.3, Grade 1, with 6 pin tumbler cylinders, except where otherwise indicated in Hardware Schedule.
      1) Type: Mortise device with concealed vertical rods unless otherwise indicated.
      2) Style: Modern.
3. Lockset and Latchset Design: Solid lever with rose, as selected by Architect.
4. Backset: 2-3/4".
5. Strikes: Furnish standard strikes with extended lips where required to protect trim from being marred by latch bolt; verify type of cutouts provided in metal frames.

D. Cylinders, Keys, and Keying: Hardware manufacturers shall provide for grand master, master key alike or key different keying as directed by Owner.
1. Manufacturer:
   a. Schlage Lock Co.
   b. Or accepted equal.
2. Provide 7 pin tumbler with interchangeable core unless otherwise indicated.
3. Provide cylinders of extruded brass bar material per ANSI A156.5.
4. Provide construction cylinders for doors requiring locking during construction; construction cylinders shall be removed and replaced just prior to Owner occupancy.
5. Submit keys for final use to Owner; provide not less than two keys for each lockset, six of each type and level of masterkey, two grand master keys, and 5% extra blanks; comply with guidelines in ANSI a156.28, Appendix A.
6. Hardware manufacturers shall key and register lock cylinders.
7. Key Control System: Provide complete key control system with identification and storage capacity suitable for Project per ANSI A156.5.

E. Closers: ANSI A156.4, furnish products of one manufacturer; full rack and pinion type with steel spring and non-freezing hydraulic fluid.
1. Manufacturers:
   a. LCN Closers Division Schlage Lock Co.

b. Or accepted equal.
2. Provide controls for regulating closing, latching, speeds and back check.
3. Arm types shall suit individual conditions, as approved; supply parallel-arm closers at reverse bevel doors and where doors swing full 180 degrees.
4. Mount closers on room side or pull side unless otherwise indicated.
5. Sizes: Adjustable to following maximum door operating pressures:
   a. Typical Doors: 5 pounds.
   b. Fire Rated Doors: 15 pounds.
   c. Make labeled doors self-closing.
   d. Closers shall be adjusted by factory representative.
6. Design: ANSI Modern Type with Cover, unless otherwise indicated.

F. Thresholds, Stops, Trim, and Miscellaneous Hardware: Provide as indicated, as specified, as included in Hardware Schedule, and as required for complete installation.
1. Manufacturers Specified:
   a. Pivots per ANSI A156.4: Stanley.
   b. Exit Devices per ANSI A156.3: Von Duprin.
   c. Flushbolts per ANSI A156.3: Ives.
   d. Coordinators: Trimco.
   e. Kickplates: Trimco.
   f. Wall/Floorstops per ANSI A156.8: Ives.
   g. Overhead stops per ANSI A156.8: Glynn-Johnson.
   h. Thresholds per ANSI A156.21: Pemko.
   i. Doorsweeps: Pemko.
   j. Pulls: Trimco.
   k. Sliding Door Hardware per ANSI A156.14: Henderson.
   l. Or accepted equal.
2. Approved Substitutes:
   a. Pivots: McKinney.
   b. Exit Devices: none.
   c. Flushbolts: Trimco.
   d. Coordinators: none.
   e. Kickplates: none.
   f. Wall/Floorstops: Trimco.
   g. Overhead stops: DCI.
   h. Thresholds: Zero.
   i. Doorsweeps: Zero.
   j. Pulls: none.
   k. Sliding Door Hardware: none.
   l. Or accepted equal.
3. Weather-Stripping: Provide continuous weather-stripping at top and sides of exterior doors.
4. Fire Rated Gaskets: Provide continuous fire rated gaskets at top and sides of fire rated doors per ANSI A156.22.
5. Kick Plates: Height indicated by 1" less than door width; minimum 0.050" thick.
6. Pulls: Provide with bolts to secure from opposite door face; provide with pull plates unless otherwise indicated.

2.2 ACCESSORIES

A. General: Provide complete hardware with accessories as required for doors and applications indicated.

B. Templates: Furnish templates or physical hardware items to manufacturers concerned sufficiently in advance to avoid delay in Work.

C. Reinforcing Units: Furnished by door manufacturer, coordinated by hardware manufacturer.

D. Fasteners: Furnish as recommended by manufacturer and as required to install secure hardware.
   1. Finish: Match hardware.
   2. Furnish screws for items applied on gypsum board sufficiently long to provide solid connection to framing or backing

E. Through Bolts: Through bolts and grommet nuts shall be avoided on door faces in highly visible areas, unless no alternative is possible, as directed and approved, and shall not be used for solid wood core doors.

F. Electrical and Mechanical: Make provisions and coordinate requirements for mechanical and electrical devices in connection with hardware.

2.3 FINISHES

A. Finish: Satin chrome.

B. Closers: Metal cover finished to match door-operating hardware.

C. Other Items: Provide manufacturer's standard finishes matching similar hardware types on same door, and maintain acceptable finish considering anticipated use.

PART 3 EXECUTION

3.1 INSTALLATION

A. Install finish hardware specified under this section; coordinate with manufacturer and installation of doors and frames.

B. Fit hardware prior to painting. Remove for painting of doors and frames before final installation of hardware.

C. Install hardware in accordance with manufacturer's instructions.

D. No extra cost will be allowed because of changes or corrections necessary to facilitate installation of hardware.

3.2 MOUNTING POSITIONS

A. Heights given are center line heights from finished floor.
   1. Locks and Latches: 38" to center of lever.
   2. Door Pulls: 42" to center of grip.
   3. Push Plate: 42"; coordinate with pull location.
   4. Push-Pull Bar: 42" to center of bar.
   5. Top Hinge: To jamb manufacturer's standard, but not greater than 10" from head of frame to center line of hinge.
   6. Bottom Hinge: To jamb manufacturer's standard, but not greater than 12-1/2" from floor to center line of hinge.
   7. Intermediate Hinges: Equally spaced between top and bottom hinges and from each other.
   8. Hinge Mortise on Door Leaf: 1/4" to 5/16" from stop side of door.
   9. Dead Bolt: Not more than 44" from floor to operating lever.

B. Comply with recommendations of Builders Hardware Manufacturers Association, subject to approval, for heights of items not indicated.

3.3 ADJUSTING

A. Qualified hardware supplier's or manufacturer's representatives shall inspect installation and make adjustments.
   1. Adjust closers, locks, and critical operational hardware.
   2. Deliver instructions for maintenance and future adjustments to Owner's Representative.

3.4 HARDWARE SCHEDULE

A. The Hardware Schedule establishes a type and standard of quality.

B. Examine Drawings and Specifications and furnish proper hardware for door openings, whether listed or not.

C. Bring omissions to attention of Architect prior to bid opening for instructions; otherwise, list will be considered complete; no extras will be allowed.

D. Manufacturers:

PRODUCT	SPECIFIED MANUFACTURER	APPROVED SUBSTITUTE
HINGES	STANLEY	HAGER
LOCKS/LATCHES	HAGER	NONE
CYLINDERS	SCHLAGE	NONE
PANICS	HAGER	NONE
AUTO OPERATORS	HAGER	NONE
RF RECEIVERS	HAGER	NONE
ACTUATORS	HAGER	NONE
CLOSERS	HAGER	NONE
OVERHEAD STOPS	HAGER	NONE
PUSH/PULLS	HAGER	TRIMCO
FLUSHBOLTS	HAGER	TRIMCO
DUSTPROOF STRIKES	HAGER	TRIMCO
FLOORSTOPS	HAGER	TRIMCO
WALLSTOPS	HAGER	TRIMCO
KICKPLATES	HAGER	TRIMCO
MOP PLATES	HAGER	TRIMCO
SILENCERS	HAGER	TRIMCO
THRESHOLDS	PEMKO	NGP
DOOR SWEEPS	PEMKO	NGP
SEALS	PEMKO	NGP
WEATHERSTRIP	PEMKO	NGP
ASTRAGAL SEALS	PEMKO	NGP

E. Hardware Groups:

SET 01:
DOOR #101A, 110C

6 EA.	HINGES FBB191 4.5 X 4.5 NRP	32D
1 EA.	MORTISE PANIC 4501N 36” 1-3/4 RHR	US32D
1 EA.	PANIC TRIM 45MN WTN RHR	US26D
1 EA.	MORTISE CYLINDER 20-061 C	US26D
1 EA.	AUTO OPERATOR 8318A 36” @ RHR LEAF ONLY	ALM
1 EA.	RF RECEIVER 82RX (100205152)	
2 EA.	ACTUATORS 8228 04W 00 04EXT	SS
2 EA.	ACTUATOR MOUNTING BOX 100205146	GREY
2 EA.	FLUSHBOLTS 282D-12” @ LHR LEAF	US26D
1 EA.	DUSTPROOF STRIKE 280X	US26D
2 EA.	FLOORSTOPS 259H	US26D
1 EA.	THRESHOLD 2727 A FHSL14 (VERIFY WITH DETAILS)	MILL
2 EA.	DOOR SWEEP 321CN TKSP8	ALUM
1 SET	WEATHERSTRIP 303AS	MILL
1 SET	SPLIT ASTRAGAL 18041CNB	ALUM

NOTE OF OPERATION: ENTRY BY KEY IN OUTSIDE CYLINDER. ONCE INSIDE, DOGGING OF PANIC BAR ALLOWS DOOR TO BE USED AS PUSH/PULL. TURNING ON POWER TO AUTO OPERATOR THEN ALLOWS USE OF EXTERIOR AND INTERIOR ACTUATORS TO AUTOMATICALLY OPEN DOOR FOR ENTRY OR EXIT. AFTER HOURS, POWER OFF AUTO OPERATOR AND UNDOG PANIC FOR SECURED OPENING.

SET 02:
DOOR #102A

3 EA.	HINGES FBB179 4.5 X 4.5	26D
1 EA.	PASSAGE 3510 WTN	US26D
1 EA.	OVERHEAD STOP 7016 SRF SZ1 SX1N @ 90DEG	US32D
1 EA.	KICKPLATE 190S 10” X 2LDW	US32D
3 EA.	SILENCERS 307D	GREY

SET 03:
DOOR #103A

3 EA.	HINGES FBB179 4.5 X 4.5 NRP	26D
1 EA.	LOCKSET 3553 WTN SCC 6PIN	US26D
1 EA.	WALLSTOP 236W	US32D
1 EA.	KICKPLATE 190S 10” X 2LDW	US32D
3 EA.	SILENCERS 307D	GREY

SET 04:
DOOR #105A

3 EA.	HINGES FBB179 4.5 X 4.5 NRP	26D
1 EA.	LOCKSET 3553 WTN SCC 6PIN	US26D
1 EA.	WALLSTOP 236W	US32D
1 EA.	KICKPLATE 190S 10” X 2LDW	US32D
1 SET	SEALS S44 BL	BLACK

SET 05:
DOOR #106A, 107A

3 EA.	HINGES FBB191 4.5 X 4.5		26D
1 EA.	PUSH PLATE 30S 6 X 16		US32D
1 EA.	PULL PLATE 33G 8”CTC X 4 X 16		US32D
1 EA.	CLOSER 5100 MLT		ALM
1 EA.	FLOORSTOP 248F		US26D
1 EA.	MOP PLATE 190S 4” X 1LDW		US32D
1 EA.	KICKPLATE 190S 10” X 2LDW		US32D
3 EA.	SILENCERS 307D		GREY

SET 06:
DOOR #108A, 111A

3 EA.	HINGES FBB191 4.5 X 4.5 NRP		US32D
1 EA.	RIM PANIC 4501 RIM 36” 1-3/4		US32D
1 EA.	PANIC TRIM 45NL WTN	US26D	
1 EA.	RIM CYLINDER 20-057 C	US26D	
1 EA.	AUTO OPERATOR 8318A 36” @ RHR LEAF ONLY		ALM
1 EA.	RF RECEIVER 82RX (100205152)		
2 EA.	ACTUATORS 8228 04W 00 04EXT		SS
2 EA.	ACTUATOR MOUNTING BOX 100205146	GREY	
1 EA.	FLOORSTOP 259H		US26D
1 EA.	KICKPLATE 190S 10” X 2LDW		US32D
1 EA.	THRESHOLD 2727 A FHSL14 (VERIFY WITH DETAILS)		MILL
1 EA.	DOOR SWEEP 321CN TKSP8		ALUM
1 SET	WEATHERSTRIP 303AS		MILL

NOTE OF OPERATION: ENTRY BY KEY IN OUTSIDE CYLINDER. ONCE INSIDE, DOGGING OF PANIC BAR ALLOWS DOOR TO BE USED AS PUSH/PULL. TURNING ON POWER TO AUTO OPERATOR THEN ALLOWS USE OF EXTERIOR AND INTERIOR ACTUATORS TO AUTOMATICALLY OPEN DOOR FOR ENTRY OR EXIT. AFTER HOURS, POWER OFF AUTO OPERATOR AND UNDOG PANIC FOR SECURED OPENING.

SET 07:
DOOR #109A

3 EA.	HINGES FBB179 4.5 X 4.5		26D
1 EA.	STOREOOM LOCK 3580 WTN SCC 6PIN	US26D	
1 EA.	OVERHEAD STOP & HOLD 7017 SRF SZ1 SX1N @ 90DEG		US32D
1 EA.	KICKPLATE 190S 10” X 2LDW		US32D
3 EA.	SILENCERS 307D		GREY

SET 08:
DOOR #110A, 110B, 119A, 119B

6 EA.	HINGES FBB179 4.5 X 4.5 NRP		26D
2 EA.	SVR PANIC 4501 LBR 36” 1-3/4	US32D	
1 EA.	PANIC TRIM 45CE WTN @ RHR	US26D	
1 EA.	MORTISE CYLINDER 20-061 C		US26D
1 EA.	PANIC TRIM 45DT WTN @ LHR		US26D
2 EA.	CLOSERS 5100 PAR HDHOCS @ 90DEG	ALM	
2 EA.	KICKPLATES 190S 10” X 2LDW		US32D
1 SET	SEALS S44 BL		BLACK
1 SET	SPLIT ASTRAGAL 18041CNB		ALUM

SET 09:
DOOR #112A

3 EA.	HINGES FBB191 4.5 X 4.5 NRP		32D
1 EA.	RIM PANIC 4501 RIM 36” 1-3/4		US32D
1 EA.	PANIC TRIM 45CE WTN	US26D	
1 EA.	MORTISE CYLINDER 20-061 C		US26D
1 EA.	CLOSER 5100 PAR		ALM
1 EA.	FLOORSTOP 259H		US26D
1 EA.	KICKPLATE 190S 10” X 2LDW		US32D
1 EA.	THRESHOLD 2727 A FHSL14 (VERIFY WITH DETAILS)		MILL
1 EA.	DOOR SWEEP 321CN TKSP8		ALUM
1 SET	WEATHERSTRIP 303AS		MILL

SET 10:
DOOR #113A, 114A, 115A

1 EA.	STOREOOM LOCK 3580 WTN SCC 6PIN	US26D	
1 EA.	WALLSTOP 236W		US32D
1 EA.	KICKPLATE 190S 10” X 2LDW		US32D

BALANCE OF EXISTING HARDWARE TO REMAIN

SET 11:
DOOR #113.1A, 204

3 EA.	HINGES FBB179 4.5 X 4.5		26D
1 EA.	STOREOOM LOCK 3580 WTN SCC 6PIN	US26D	
1 EA.	WALLSTOP 236W		US32D
1 EA.	KICKPLATE 190S 10” X 2LDW		US32D
3 EA.	SILENCERS 307D		GREY

SET 12:
DOOR #116A

1 EA.	STOREOOM LOCK 3580 WTN SCC 6PIN	US26D	
2 EA.	FLOORSTOPS 242F		US26D
2 EA.	KICKPLATE 190S 10” X 2LDW		US32D

BALANCE OF EXISTING HARDWARE TO REMAIN

SET 13:
DOOR #117A

3 EA.	HINGES FBB191 4.5 X 4.5 NRP		32D
1 EA.	RIM PANIC 4501 RIM 36” 1-3/4		US32D
1 EA.	PANIC TRIM 45NL WTN	US26D	
1 EA.	RIM CYLINDER 20-057 C	US26D	
1 EA.	CLOSER 5100 PAR		ALM
1 EA.	FLOORSTOP 259H		US26D
1 EA.	KICKPLATE 190S 10” X 2LDW		US32D
1 EA.	THRESHOLD 2727 A FHSL14 (VERIFY WITH DETAILS)		MILL
1 EA.	DOOR SWEEP 321CN TKSP8		ALUM
1 SET	WEATHERSTRIP 303AS		MILL

SET 14:
DOOR #117B, 117C

1 EA.	CLASSROOM LOCK 3570 WTN SCC 6PIN		US26D
1 EA.	WALLSTOP 236W		US32D
1 EA.	KICKPLATE 190S 10” X 2LDW		US32D

BALANCE OF EXISTING HARDWARE TO REMAIN

SET 15:
DOOR #118A

3 EA.	HINGES FBB191 4.5 X 4.5 NRP		32D
1 EA.	RIM PANIC 4501 RIM 36” 1-3/4		US32D
1 EA.	PANIC TRIM 45CE WTN	US26D	
1 EA.	MORTISE CYLINDER 20-061 C		US26D
1 EA.	CLOSER 5100 HDHOCS @ 90DEG		ALM
1 EA.	KICKPLATE 190S 10” X 2LDW		US32D
1 EA.	THRESHOLD 2727 A FHSL14 (VERIFY WITH DETAILS)		MILL
1 EA.	DOOR SWEEP 321CN TKSP8		ALUM
1 SET	WEATHERSTRIP 303AS		MILL

SET 16:
DOOR #118B

3 EA.	HINGES FBB191 4.5 X 4.5		26D
1 EA.	PUSH PLATE 30S 6 X 16	US32D	
1 EA.	PULL PLATE 33G 8”CTC X 4 X 16	US32D	
1 EA.	CLOSER 5100 HDHOCS @ 90DEG		ALM
1 EA.	KICKPLATE 190S 10” X 2LDW		US32D
3 EA.	SILENCERS 307D		GREY

SET 17:
DOOR #118C

3 EA.	HINGES FBB191 4.5 X 4.5		26D
1 EA.	PUSH PLATE 30S 6 X 16	US32D	
1 EA.	PULL PLATE 33G 8”CTC X 4 X 16	US32D	
1 EA.	CLOSER 5100 HO @ 90DEG		ALM
1 EA.	MOP PLATE 190S 4” X 1LDW		US32D
1 EA.	KICKPLATE 190S 10” X 2LDW		US32D
3 EA.	SILENCERS 307D		GREY

SET 18:
DOOR #118D

ALL HARDWARE BY COILING COUNTER DOOR SUPPLIER

SET 19:
DOOR #120A, 120C

3 EA.	HINGES FBB179 4.5 X 4.5	26D
1 EA.	CLASSROOM LOCK 3570 WTN SCC 6PIN	US26D
1 EA.	CLOSER 5100 MLT	ALM
1 EA.	WALLSTOP 236W	US32D
1 EA.	KICKPLATE 190S 10” X 2LDW	US32D
1 SET	SEALS S44 BL	BLACK

SET 20:
DOOR #120B

3 EA.	HINGES FBB179 4.5 X 4.5	26D
1 EA.	CLASSROOM LOCK 3570 WTN SCC 6PIN	US26D
1 EA.	CLOSER 5100 HDHOCS @ 90DEG	ALM
1 EA.	KICKPLATE 190S 10” X 2LDW	US32D
1 SET	SEALS S44 BL	BLACK

SET 21:
DOOR #EXISTING ROLLING DOOR

ALL EXISTING HARDWARE TO REMAIN

SET 22:
DOOR #202A, 203A

1 EA.	STOREOOM LOCK 3580 WTN SCC 6PIN	US26D	
1 EA.	WALLSTOP 236W		US32D

BALANCE OF EXISTING HARDWARE TO REMAIN

11B-404.2.7 Door and gate hardware. Handles, pulls, latches, locks, and other operable parts on doors and gates shall comply with Section 11B-309.4. Operable parts of such hardware shall be 34 inches (864 mm) minimum and 44 inches (1118 mm) maximum above the finish floor or ground. Where sliding doors are in the fully open position, operating hardware shall be exposed and usable from both sides.
Exceptions:

1. Existing locks shall be permitted in any location at existing glazed doors without stiles, existing overhead rolling doors or grilles, and similar existing doors or grilles that are designed with locks that are activated only at the top or bottom rail.
2. Access gates in barrier walls and fences protecting pools, spas, and hot tubs shall be permitted to have operable parts of the release of latch on self-latching devices at 54 inches (1372 mm) maximum above the finish floor or ground provided the self-latching devices are not also self-locking devices and operated by means of a key, electronic opener, or integral combination lock.

11B-404.2.8 Closing speed. Door and gate closing speed shall comply with Section 11B-404.2.8.
11B-404.2.8.1 Door closers and gate closers. Door closers and gate closers shall be adjusted so that from an open position of 90 degrees, the time required to move the door to a position of 12 degrees from the latch is 5 seconds minimum.
11B-404.2.8.2 Spring hinges. Door and gate spring hinges shall be adjusted so that from the open position of 70 degrees, the door or gate shall move to the closed position in 1.5 seconds minimum.

11B-404.2.9 Door and gate opening force. The force for pushing or pulling open a door or gate other than fire doors shall be as follows:
1. Interior hinged doors and gates: 5 pounds (22.2 N) maximum.
2. Sliding or folding doors: 5 pounds (22.2 N) maximum.
3. Required fire doors: the minimum opening force allowable by the appropriate administrative authority, not to exceed 15 pounds (66.7 N).
4. Exterior hinged doors: 5 pounds (22.2 N) maximum.

These forces do not apply to the force required to retract latch bolts or disengage other devices that hold the door or gate in a closed position.
Exception:
Exterior doors to machinery spaces including, but not limited to, elevator pits or elevator penthouses; mechanical, electrical or communications equipment rooms; piping or equipment catwalks; electric substations and transformer vaults; and highway and tunnel utility facilities.
When, at a single location, one of every eight exterior door leafs, or fraction of eight, is a powered door, other exterior doors at the same location, serving the same interior space, may have a maximum opening force of 8.5 pounds (37.8 N). The powered leaf(s) shall be located closest to the accessible route.
a. Powered doors shall comply with Section 11B-404.3. Powered doors shall be fully automatic doors complying with Builders Hardware Manufacturers' Association (BHMA) A156.10 or low energy operated doors complying with BHMA A156.19.
b. Powered doors serving a building or facility with an occupancy of 150 or more shall be provided with a back-up battery or back-up generator. The back-up power source shall be able to cycle the door a minimum of 100 cycles.
c. Powered doors shall be controlled on both the interior and exterior sides of the doors by sensing devices, push plates, vertical actuation bars or other similar operating devices complying with Sections11B-304, 11B-305 and 11B-308.
At each location where push plates are provided there shall be two push plates; the centerline of one push plate shall be 7 inches (178 mm) minimum and 8 inches (203 mm) maximum above the floor or ground surface and the centerline of the second push plate shall be 30 inches (762 mm) minimum and 44 inches (1118 mm) maximum above the floor or ground surface. Each push plate shall be a minimum of 4 inches (102 mm) diameter or a minimum of 4 inches by 4 inches (102 mm by 102 mm) square and shall display the International Symbol of Accessibility complying with Section 11B-703.7.
At each location where vertical actuation bars are provided the operable portion shall be located so the bottom is 5 inches (127 mm) maximum above the floor or ground surface and the top is 35 inches (889 mm) minimum above the floor or ground surface. The operable portion of each vertical actuation bar shall be a minimum of 2 inches (51 mm) wide and shall display the International Symbol of Accessibility complying with Section 11B-703.7.
Where push plates, vertical actuation bars or other similar operating devices are provided, they shall be placed in a conspicuous location. A level and clear floor or ground space for forward or parallel approach

complying with Section 11B-305 shall be provided, centered on the operating device. Doors shall not swing into the required clear floor or ground space.
d. Signage identifying the accessible entrance required by Section11B-216.6 shall be placed on, or immediately adjacent to, each powered door. Signage shall be provided in compliance with BHMA A156.10 or BHMA A156.19, as applicable.
e. In addition to the requirements of Item d, where a powered door is provided in buildings or facilities containing assembly occupancies of 300 or more, a sign displaying the International Symbol of Accessibility measuring 6inches by 6 inches (152 mm by 152 mm), complying with Section 11B-703.7, shall be provided above the door on both the interior and exterior sides of each powered door.

11B-404.2.10 Door and gate surfaces. Swinging door and gate surfaces within 10 inches (254mm) of the finish floor or ground measured vertically shall have a smooth surface on the push side extending the full width of the door or gate. Parts creating horizontal or vertical joints in these surfaces shall be within $^{1}/_{16}$ inch (1.6 mm) of the same plane as the other and be free of sharp or abrasive edges. Cavities created by added kick plates shall be capped.
Exceptions:
1. Sliding doors shall not be required to comply with Section 11B-404.2.10.
2. Tempered glass doors without stiles and having a bottom rail or shoe with the top leading edge tapered at 60 degrees minimum from the horizontal shall not be required to meet the 10 inch (254 mm) bottom smooth surface height requirement.
3. Doors and gates that do not extend to within 10 inches (254 mm) of the finish floor or ground shall not be required to comply with Section 11B-404.2.10.

END OF SECTION

SECTION 08 71 13

AUTOMATIC DOOR OPERATORS

PART 1 GENERAL

1.1 SUMMARY

A. This section includes the following types of automatic door operators:
   1. Low-energy and power-assist door operators for swinging door applications.

B. References:
   1. Standards, manuals, and codes refer to the latest edition of such standards, manuals, and codes in effect as of the date of issue of this Project Manual, unless indicated otherwise in CBC Chapter 35 and CFC Chapter 80.
   2. American National Standards Institute (ANSI):
      a. ANSI A117.1 - Accessible and Usable Buildings and Facilities.
   3. American National Standards Institute (ANSI) / Builders Hardware Manufacturers Association (BHMA):
      a. ANSI/BHMA A156.10 American National Standard for Power Operated Pedestrian Doors.
      b. ANSI/BHMA A156.19 Standards for Power Assist and Low Energy Power Operated Doors.
   4. American Association of Automatic Door Manufacturers (AAADM).
   5. American Society for Testing and Materials (ASTM).
      a. ASTM B221 Standard Specification for Aluminum and Aluminum Alloy Extruded Bars, Rods, Wire, Profiles and Tubes.
      b. ASTM B209 Standard Specification for Aluminum and Aluminum Alloy Sheet and Plate.
   6. American Architectural Manufacturers Association (AAMA).
      a. AAMA 611 Voluntary Specification for Anodized Architectural Aluminum.
   7. National Association of Architectural Metal Manufacturers (NAAMM).
      a. Metal Finishes Manual for Architectural Metal Products.
   8. International Code Council (ICC).
      a. IBC: International Building Code.
      b. CBC: California Building Code.

1.2 DEFINITIONS

A. Activation Device: Device that, when actuated, sends an electrical signal to the door operator to activate the operation of the door.
   1. Knowing act: Consciously initiating the opening of a power operated door using acceptable methods including wall mounted switches such as push plates and controlled access devices such as keypads, card readers and key switches.

B. Safety Device: A device that detects the presence of an object or person within a zone where contact could occur and provides a signal to stop the movement of the door.

1.3 PERFORMANCE REQUIREMENTS

A. Automatic door equipment accommodates medium to heavy pedestrian traffic.

B. Opening Force Requirements: Doors shall open with a manual force, not to exceed 30 lbf (133N) to set the door in motion and 15 lbf to fully open the door applied at 1-inch from the latch edge of the door. The force required to prevent a stopped door from opening or closing shall not exceed 15 lbf (67 N) measured 1-inch from the latch edge of the door at any point during opening or closing.

C. Closing Time:
1. Doors shall be field adjustable to close from 90-degrees to 10-degrees in 3 seconds or longer as applicable per ANSI/BHMA A156.19 standards.
2. Doors shall be field adjusted to close from 10-degrees to fully closed in not less than 1.5 seconds.

1.4 SUBMITTALS

A. Product Data: Manufacturer's product data sheets including installation details, material descriptions, dimensions of individual components and profiles, fabrication, operational descriptions and finishes.

B. Shop Drawings: Submit manufacturer’s shop drawings, including elevations, sections and details, indicating dimensions, materials, operator, motion /presence sensor control device, anchors, hardware, finish, options and accessories.
1. Indicate required clearances, and location and size of each field connection.
2. Indicate locations and elevations of entrances showing activation and safety devices.
3. Wiring Diagrams: For power, signal, and activation / safety device wiring.

C. Samples: Submit manufacturer’s samples of aluminum finish.

D. Manufacturers Field Reports: Submit manufacturer’s field reports from AAADM certified technician of inspection and approval of doors for compliance with ANSI/BHMA after completion of installation.

E. Operating and Maintenance Manuals: Provide manufacturers operating and maintenance manuals for each item comprising the work of this section in quantity as required in Division 01, Closeout Submittals. The manual to include the name, address, and contact information of the manufacturers providing the operators and their nearest service representatives. The final copies delivered after completion of the installation test to include spare parts list.

F. Warranties and Maintenance: Special warranties and maintenance agreements specified in this Section.

1.5 QUALITY ASSURANCE

A. Manufacturers Qualifications: Engage qualified manufacturers with a minimum 10 years’ of documented experience in manufacturing of doors and equipment of similar to that indicated for this Project and that have a proven record of successful in-service performance. Manufacturer to have a company certificate issued by AAADM.

B. Installer Qualifications: Installers, trained by the primary product manufacturers, with a minimum 3 years’ documented experience installing and maintenance of units similar in material, design, and extent to that indicated for this Project and whose work has resulted in construction with a record of successful in-service performance.

C. Certified Inspector Qualifications: Certified by AAADM.

D. Source Limitations for Automatic Door Operators: Obtain each type of door, frame, operator and sensor components specified in this Section from a single source, same manufacturer unless otherwise indicated.

E. Certifications: Operators shall be certified by the manufacturer to meet performance design criteria in accordance with the following standards.
   1. ANSI/BHMA A156.19 American National Standard for Power Assist and Low Energy Operated Doors.
   2. NFPA 101 - Life Safety Code.
   3. UL 325 - Standard for Door, Drapery, Gate, Louver, and Window Operators and Systems.
   4. UL Listed R-9469 Fire Door Operator with Automatic Closer.

F. Emergency Exit Door Requirements: Comply with requirements of authorities having jurisdiction for automatic entrance doors serving as a required means of egress.

1.6 COORDINATION

A. Coordinate door operators with doors, frames and related work to ensure proper size, thickness, hand, function and finish. Coordinate hardware for automatic entrances with hardware required for rest of the project.

B. Electrical System Roughing-in: Coordinate layout and installation of power door operators with connections to power supplies and access control system as applicable.

1.7 WARRANTY

A. Automatic Door Operators shall be free of defects in material and workmanship for a period of one (1) year from the date of substantial completion.

B. During the warranty period a factory-trained technician shall perform service and affect repairs. An inspection shall be performed after each adjustment or repair.

C. During the warranty period all warranty work, including but not limited to emergency service, shall be performed during normal business hours.

D. Manufacturer shall have in place a dispatch procedure that shall be available 24 hours a Day, 7 Days a week for emergency call back service.

PART 2 PRODUCTS

2.1 MANUFACTURER

A. ASSA ABLOY Entrance Systems

B. Or accepted equal.

2.2 MATERIALS

A. Aluminum: Alloy and temper recommended by manufacturer for type of use and finish indicated, as indicated below:
   1. Extruded Aluminum, Alloy 6063-T5.

2.3 SWING DOOR OPERATORS

A. Besam ASSA ABLOY SW200i low energy automatic door operator:
   1. Reference Standard: ANSI/BHMA A156.19.
   2. Configuration: Operator to control single swinging doors and pairs of swinging doors as indicated on the drawings.
   3. Automatic Door Operator: Electro-mechanical, non-handed operator, powered by 24 volt, 1/4 hp motor. Operator shall be adjustable to compensate for different manual push forces as required.
      a. Automatic operator shall be capable of operating and controlling up to a 700 pound door, 48-inches wide.
      b. [Overhead Concealed Mounted Operator:]
         1) Side Access Operator Housing: Operator is contained in a 6-inch deep by 6-inch high extruded aluminum housing with a hinged cover.
         2) Overhead Concealed Mounted Housing: Mounted between door jambs, continuous for full width of door.
         3) Offset Pivoted and Hinged Door Connecting Hardware: Overhead concealed mounted operators to have a steel arm from the operator with a sliding track that is mounted to the top face on the approach (push) side of the swing door.
      c. Operator shall be field switchable between an ANSI/BHMA A156.19 and an ANSI/BHMA A156.10 compliant operator and vice versa. Addition of the required safety sensors, activation devices and guard rails may be required to comply with the applicable standard.
      d. Operator Temperature Range: Capable of operating within temperature ranges of minus 31 degrees F to 160 degrees F.
      e. Electrical Characteristics: Maximum power consumption is 300 watts (2.5 amps at 120 VAC), 50/60hz, built-in thermal overload protection.
   4. Door Operation:
      a. Opening Cycle The adjustable speed operator mechanically powers the drive shaft and the torque control maintains constant speed throughout the opening cycle regardless of stack pressures or wind speed. Operator shall allow manual door operation with operational forces as indicated to fully open the door applied at 1-inch from the latch edge of the door.
         1) Manual push force shall be adjustable from 5 lbf to 15 lbf maximum.
      b. Hold Open: The operator shall stop and hold the door open at the selected door opening angle for an adjustable period of time (1.5 seconds to 30 seconds).
      c. Closing Cycle: Spring close with speed controlled power assist.
         1) Upon loss of power, dynamic braking will control the door insuring controlled closing.
         2) Selectable Torque Control: Automatically adjusts torque without changing the closing speed of the operator.
            a) When the torque control is activated, the closing speed shall remain constant regardless of stack pressures or wind speed.
            b) Torque Cancellation: The torque control is deactivated whenever there is a signal received from door mounted sensors.
            c) The torque control is disabled during manual use of the door.
      d. Wind Force Dampening: The operator electromechanically counteracts wind forces, slowing down the door movement to safely open or close the door.
      e. Stack Pressure Compensation: Operator shall counteract positive stack pressures, negative stack pressures, and sudden changes of stack pressures. The operator never allows the door to open or close faster than the speed control settings, regardless of pressures.
      f. Obstruction Control: The operator will stop and reverse the door movement.
      g. Lock Retry Circuit: If attempt to fully close the door is unsuccessful, the operator will automatically reverse open 10 degrees and reclose in an attempt to successfully close the door.
      h. Selectable Alarm Reset: The operator can be field set so that after receiving an

alarm signal, the operator will not accept any activation impulses and will operate only as a manual door closer until manually reset.

i. Electronic Controls: Solid state integrated circuit controls the operation and switching of the swing power operator. The electronic control provides low voltage power supply for all means of actuation. The controls include time delay (1 to 30 seconds) for normal cycle.

j. Control Switch: Automatic door operators shall be equipped with the following type of multi-position function switch:

1) [3 position rocker switch mounted on end cap (On-Off-Hold).]

5. Operator Interface:

a. Safety Sensor Integration for overhead presence safety device and door mounted reactivation safety sensors.

2.4 ACTIVATION DEVICES

A. General: Provide activation devices in accordance with ANSI/BHMA standards, for condition of exposure and for long-term, maintenance-free operation under normal traffic load for type of occupancy indicated. Coordinate activation and safety devices with door operation and door operator mechanisms.

B. [Knowing Act Activation Device:]

1. [Push Plate: Hard wired, [4.1/2-inch square] stainless steel push plate high & low switches engraved with "Push to Open" with a blue accessibility logo.]
2. [Push Plate: Radio controlled, wireless, [4.1/2-inch square] stainless steel push plate switches engraved with "Push to Open" with a blue accessibility logo.]
3. [Sensor Plate: Touchless, [2.3/4-inch by 4.1/2-inch] [4.1/2-inch square] activation senor plates, black polycarbonate with white letters. Microwave technology has an adjustable range of 2-inches to 24-inches.]

C. Manual Operation:

1. [Operator shall provide “push and go” operation allowing door to open automatically after activation by manually pulling or pushing on the door.]

2.5 [SAFETY DEVICES]

A. General: Provide safety devices in accordance with ANSI/BHMA A156.10 standards, for condition of exposure and for long-term, maintenance-free operation under normal traffic load for type of occupancy indicated. Coordinate safety devices with door operation and door operator mechanisms.

B. Safety Devices:

1. Door Mounted Presence Sensor (DMPS): Shall be the ASSA ABLOY door mounted infrared presence safety device (mounted at top of each door); adjustable to provide detection field sizes and functions required by ANSI/BHMA A156.10.
   a. Unit to provide detection during the travel of the door.
   b. Upon detection the sensor shall provide a signal to stop or reverse the door action.
2. Door Mounted Safety Sensor Devices: Safety sensor devices shall be door mounted as specified.
   a. [The door mounted safety sensor devices shall be mounted on both the swing (pull) side and the approach (push) side of the door (2 safety sensors per leaf), providing detection on both sides of the door.]

2.6 ALUMINUM FINISHES

A. Comply with NAAMM's "Metal Finishes Manual for Architectural and Metal Products" for

recommendations for applying and designating finishes.

B. Automatic Door Operator Enclosure:
1. [Anodized Finish:]
a. [AAMA 611, Clear, AA- M12C22A41, Class I, 0.018 mm.]

PART 3 EXECUTION

3.1 EXAMINATION

A. Examine doors and frames, with Installer present, for compliance with requirements for installation tolerances, wall and floor construction, and other conditions affecting performance of swinging power operated doors.

B. Examine roughing-in for electrical source power to verify actual locations of wiring connections.

C. Proceed only after such discrepancies or conflicts have been resolved.

3.2 INSTALLATION

A. Do not install damaged components: Fit joints to produce hairline joints free of burrs and distortion. Rigidly secure non-movement joints.

B. Operators: Install automatic door operators plumb and true in alignment with established lines and grades without warp or rack of framing members and doors. Anchor securely in place.
1. Install surface mounted hardware using concealed fasteners to greatest extent possible.
2. Set headers, carrier assemblies, tracks, operating brackets and guides level and true to location with anchorage for permanent support.

C. Door Operators: Connect door operators to electrical power distribution system [including smoke evacuation system and/or fire detection system] as specified in Division 26 Sections.

D. Sealants: Comply with requirements specified in division 7 Section “Joint Sealants” to seal between the operator housing and the adjacent surfaces.

E. Signage: Apply signage on both sides of each door and sidelite as required by ANSI/BHMA A156.19 and manufacturers installation instructions.

3.3 ADJUSTING

A. Adjust automatic door operators, controls and hardware for smooth and safe operation and for weather tight closure. Adjust doors in compliance with ANSI/BHMA A156.19.

3.4 FIELD QUALITY CONTROL

A. Before placing doors into operation, AAADM certified technician shall inspect and approve doors for compliance with ANSI/BHMA A156.19. Certified technician shall be approved by manufacturer.

3.5 CLEANING AND PROTECTION

A. Clean adjacent surfaces soiled by automatic door operator installation.

B. Clean metal surfaces promptly after installation. Remove excess sealants, compounds, dirt and other substances. Repair damages and finish to match original finish.

3.6 DEMONSTRATION

A. Engage a factory-authorized representative to train Owner's maintenance personnel to adjust, operate, and maintain safe operation of the door.

END OF SECTION

SECTION 08 80 00

GLAZING

PART 1 GENERAL

1.1 SUMMARY

A. Section Includes: Provide miscellaneous glass and glazing for hollow metal work, windows and doors not provided elsewhere including accessories as required for complete installation.

1.2 REFERENCES

A. Glass Association of North America (GANA): Glazing Manual and Sealant Manual.

1.3 SYSTEM DESCRIPTION

A. Safety Glass Standard: CPSC 16 CFR 1201, ANSI Z97.1, and California Building Code Chapter 24. Each pane of safety glazing installed in hazardous locations shall be identified by a manufacturer's designation specifying who applied the designation, the manufacturer or installer and the safety glazing standard with which it complies, as well as the information specified in Section 2403.1. The designation shall be acid etched, sand-blasted, ceramic fired, laser etched, embossed or of a type that once applied, cannot be removed without being destroyed.

1.4 SUBMITTALS

A. Product Data: Furnish for each type of glass, and each type of exposed glazing material.

B. Samples: Furnish 12" square samples for each type of glass.

1.5 WARRANTY

A. Special Warranties:
   1. Special Warranty Period: Two years.

PART 2 PRODUCTS

2.1 ACCEPTABLE MANUFACTURERS

A. Vitro Architectural Glass

B. Ford Glass Division

C. Cardinal Glass Industries

D. Or accepted equal.

2.2 MATERIALS

A. Insulated Glazing System: ¼" Solarban 90 outside lite, ½" air space, ¼" clear inside lite.
   1. Manufacturers:
      a. Vitro Architectural Glass.
      b. Ford Glass Division.
      c. Or accepted equal.
   2. Testing Standards:
      a. Air Infiltration: The test specimen shall be tested in accordance with ASTM E 283. Air infiltration rate shall not exceed 0.06 cfm/ft2 at a static air pressure differential of 6.24 psf.
      b. Water Resistance: The test specimen shall be tested in accordance with ASTM E 331. There shall be no leakage at a minimum static air pressure differential of 8 psf as defined in AAMA 501.
      c. Thermal Transmittance (U-factor): When tested to AAMA Specification 1503, the thermal transmittance (U-factor) shall not be more than:
         1) Glass to Exterior – 0.47 (low-e) BTU/hr/ft2/°F.
         2) Glass to Center – 0.44 (low-e) BTU/hr/ft2/°F.
         3) Glass to Interior – 0.41 (low-e) BTU/hr/ft2/°F.
      d. Condensation Resistance (CRF): When tested to AAMA Specification 1503, the condensation resistance factor shall not be less than:
         1) Glass to Exterior – 70 frame and 69glass (low-e) or 69 frame and 58 glass (clear).
         2) Glass to Center – 62 frame and 68glass (low-e) or 63 frame and 56 glass (clear).
         3) Glass to Interior – 56 frame and 67 glass (low-e) or 54 frame and 58 glass (clear).
   3. Location at all exterior doors and door sidelights.

B. Mirrors: See section 10 28 13 Toilet Accessories

C. Glazing at interior doors and windows: See finished schedule legend.

D. Glazing Sealant: ASTM C920, Type S, Grade NS, elastomeric one-component silicone glazing sealants as recommended by sealant manufacturer for application involved.
   1. Manufacturers:
      a. Dow Corning Corp.
      b. General Electric Co.
      c. Pecora Corp.
      d. Or accepted equal.
   2. Color: As selected by Architect from manufacturer's full range of available colors.

E. Setting Blocks: 70-90 durometer hardness; 4" long by 3/8" thick by 1/4" high standard setting blocks.

F. Spacer Shims: Silicone compatible, 50 durometer hardness; 3" long by 3/32" thick by 1/4" high.

PART 3 EXECUTION

3.1 PREPARATION

A. Clean glazing channels and framing members to receive glass immediately before glazing; remove coatings not firmly bonded to substrate.

B. Apply primer to joint surfaces where recommended by sealant manufacturer.

3.2 INSTALLATION

A. Comply with GANA Glazing Manual and Sealant Manual and glazing manufacturer instructions.
   1. Do not allow glass to touch metal surfaces.
   2. Comply with NFPA 80 for glass in fire rated openings.

B. Place setting blocks at quarter points in thin course of sealant.

C. Install removable stops with glass centered in space with spacer shims at 2'-0" intervals on both sides of glass, 1/4" below sightline.

D. Sealant at Glazing: Fill gap between glass and stops with sealant to depth equal to bite of frame on glass but not more than 3/8" below sightline.
   1. Apply sealant to uniform and level line, flush with sightline; tool or wipe sealant surface for smooth appearance; at exterior locations tool sealant so water is carried away from glass.

3.3 CLEANING

A. Mark glass after installation by crossed streamers attached to framing and held away from glass; do not apply markers to surface of glass.

B. Remove nonpermanent labels immediately after sealant cures; cure sealants for high early strength and durability.

C. Remove and replace glass that is broken, chipped, cracked, abraded or damaged during construction period, including damage by natural causes, accidents and vandalism.

END OF SECTION

SECTION 09 21 16

GYPSUM BOARD ASSEMBLIES

PART 1 GENERAL

1.1 SUMMARY

A. Section Includes: Provide gypsum board systems including gypsum board, joint treatment, acoustical accessories, and general accessories for complete installation.

1.2 REFERENCES

A. ASTM C754: Installation of Steel Framing Members to Receive Screw-Attached Gypsum Wallboard, Backing Board, or Water-Resistant Backing Board.

B. ASTM C840: Application and Finishing of Gypsum Board.

1.3 SYSTEM DESCRIPTION

A. Performance Requirements: Perform gypsum board systems work in accordance with recommendations of ASTM C754 and ASTM C840 unless otherwise specified.
   1. Loads: Comply with California Building Code requirements for design of metal framing for gypsum board systems.
      a. Deflection: Maximum L/240 typical, L/360 where plaster or tile is indicated.
   2. Seismic Requirements: Comply with code requirements for seismic bracing.

B. Systems Responsibility: Provide products manufactured by or recommended by manufacturer of gypsum board to maintain single-source responsibility for system.

C. Openings: Obtain dimensions and locations from other trades and provide openings and enclosures for accessories, specialties, equipment, and ductwork.

1.4 SUBMITTALS

A. Product Data
   1. Provide product data on metal framing, gypsum board, joint tape, and decorative finish.
   2. Furnish manufacturer's certification indicating products comply with Contract Documents and applicable codes.

1.5 PROJECT CONDITIONS

A. Do not begin installation of interior gypsum board until space is enclosed, space is not exposed to other sources of water, and space is free of standing water.

B. Maintain areas to receive gypsum board at minimum 50 degree F for 48 hours prior to application and continuously after application until drying of joint compound is complete; comply with ASTM C840.

C. Immediately remove from site gypsum board for interior use exposed to water, including gypsum board with water stains, with signs of mold, and gypsum board with mildew.

PART 2 PRODUCTS

2.1 MANUFACTURERS

A. United States Gypsum Co., USG Corp.

B. Georgia-Pacific Corp.

C. National Gypsum Co.

D. Or accepted equal.

2.2 MATERIALS

A. Gypsum Board - Standard
   1. ASTM C1396, TYPE X, FIRE RATED, 5/8” thick paper faced gypsum panels with tapered edges.

B. Moisture Resistant Gypsum Board – Restrooms
   1. Equal to Georgia Pacific Corp. “Dens-Armor Plus High Performance” 5/8” thick fiberglass faced, treated gypsum panels with tapered edges. Fire rated Type X.

C. Gypsum Board Accessories: Comply with ASTM C840.
   1. Gypsum board sealer: Provide one Coat "Hamilton Prep Coat Plus" prior to application of gypsum board texture.
   2. Provide protective coated steel corner beads and edge trim; type designed to be concealed in finished construction by tape and joint compound.
   3. Corner Beads: Manufacturer's standard metal beads.
   4. Edge Trim: “J”, "L", "LK", or "LC" casing beads – manufacturer’s standard.
   5. Reinforcing Tape, Joint Compound, Adhesive, Water, Fasteners: Types recommended by system manufacturer and conforming to ASTM C475.
      a. Typical Joint Compound: Chemical hardening type for bedding and filling, ready-mixed or powder vinyl type for topping.
   6. Control Joints: Back to back casing beads.
      a. Back control joints with 4 mil thick polyethylene air seal.

D. Gypsum Board Texture: Equal to USG “Sheetrock Brand” ready mixed wall and ceiling spray texture.

2.3 ACOUSTIC SEALANT: SERIOUS ENERGY “QUIET SEAL PRO”, NON-HARDENING, GUN GRADE SEALANT PER ASTM C834.

PART 3 EXECUTION

A. Gypsum Board Installation: Install in accordance with ASTM C840 and manufacturer's recommendations.
   1. Use screws when fastening gypsum board to furring and to framing.
   2. Erect gypsum board with ends and edges occurring over firm bearing.
      a. Ensure joints of second layer do not occur over joints of first layer in double layer applications.
   3. Place control joints to be consistent with lines of building spaces and as directed by Architect.
      a. Provide where system abuts structural elements.
      b. Provide at dissimilar materials.

   c. Lengths exceeding 30'-0" in partitions.
   d. Ceiling areas exceeding 50'-0" or 2500 square feet.
   e. Wings of "L", "U" and "T" shaped ceilings.
4. Place corner beads at external corners; use longest practical lengths.
5. Place edge trim where gypsum board abuts dissimilar materials.
6. Tape, fill, and sand exposed joints, edges, corners and openings to produce surface ready to receive finishes; feather coats onto adjoining surfaces.
7. Finishing: Comply with Gypsum Association (GA) “Levels of Gypsum Board Finish”.
   a. GA Level 4 (Typical): Provide three coat finishing and sanding is required for surfaces indicated to be painted; provide flush, smooth joints and surfaces ready for applied paint finishes.
   b. Texture:
      1) At walls to be painted – provide light orange peel spray texture.
      2) Under fabric wall covering – tape and sand only.
8. Remove and replace defective work.

END OF SECTION

SECTION 09 24 00

CEMENT PLASTERING

PART 1 GENERAL

1.1 SUMMARY

A. Section Includes:
   1. Provide integral color three-coat Portland cement plaster (stucco) with metal lath and accessories as required for complete finished system.

1.2 REFERENCES

A. ASTM C847: Metal lath.

B. ASTM C926: Application of Portland Cement Based Plaster.

C. ASTM C1063: Installation of Lathing and Furring for Portland Cement Plaster.

1.3 SUBMITTALS

A. Product Data: Submit manufacturer's product information and installation instructions for each lathing material and accessory, and for plaster materials.

B. Shop Drawings: Indicate locations of control and expansion joints.

C. Samples: Furnish 12” by 12” samples of system finishes.

1.4 QUALITY ASSURANCE

A. Pre-Installation: Convene a pre-installation conference with the General Contractor, Architect and Inspector. Review materials, installation procedures, related trades, prevailing weather, and substrate conditions.

1.5 PROJECT CONDITIONS

A. Take precautionary measures to ensure plaster is not subjected to excessive sun and wind which could cause uneven and excessive evaporation, premature dehydration, or cracking.

B. Cold-Weather Requirements: Do not apply plaster unless minimum ambient temperature of 40 degrees F has been and continues to be maintained for minimum 48 hours prior to application and until plaster is cured.

PART 2 PRODUCTS

2.1 MATERIALS

A. Portland Cement Plaster: Provide either neat or ready-mixed (where applicable) materials, at Contractor's option, complying with ASTM C926.
   1. Basecoat (Scratch coat) Materials:

a. Cement: Normal Type 1 or 1A Portland cement, ASTM C150.
b. Hydrated Lime: Special finishing hydrated lime, Type S, ASTM C206.
c. Aggregate: Natural sand, conforming to ASTM C897 or C144.

2. Brown Coat Water Acrylic Admix: Acrylic polymer specifically manufactured for use in Portland Cement Plaster (Stucco) applications and which will not detrimentally affect finish.
   a. Manufacturers:
      1) Larsen Products Corp./Acrylic Admix 101.
      2) Thoro System Products, Inc./Acryl 60.
      3) Chem-Masters Corp./Cretelox.
      4) Or accepted equal.
3. Finishing (Finish coat) Materials: Match Omega Products (800.600.6634)/AkroFlex as approved by Architect.
   a. Integral Color: Pure, non-fading, mineral oxide color conforming to ASTM C979 and designed and mixed to provide uniform color finish coat.
   b. Color: As selected by Architect and as required to produce final color of plaster to match Architect approved samples; custom color may be required.
4. Water: Clean, fresh and free from injurious amounts of oil, acid, alkali, organic matter or other deleterious substances.
5. Bond Coating: Per ASTM C932 equal to “Weld-Crete” by Larsens Products.

B. Metal Components: Comply with requirements of ASTM C1063.
1. Exterior Components: Hot-dip galvanized finish; ASTM A924 and A653 minimum G90 for 18 gage and lighter formed metal products, ASTM A123 galvanized after fabrication for 16 gage and heavier products.
   a. Exposed Exterior Components: Zinc accessories unless fully concealed in plaster.
   b. Anchorage and Fastening: Approved devices of type and size to suit application and to rigidly secure suspension system.
2. Lathing:
   a. Exterior Metal Wall Lath: 18 gauge x 1 inch or 17 gauge x 1.5” woven wire fabric at vertical applications, 1.4 lbs per square yard. Davis Wire or equal.
   b. Outside Corners: CA “Corner Aid”, by Stockton Products.
   c. Inside Corners: CRT “Cornerite”, by Stockton Products.
   d. Anchorage: Furring nails meeting the requirements of Table 2507.2, 2016 California Building Code with cardboard spacers.
   e. Rib Lath at Soffits: 3/8” 3.4 lbs per sq. yd., G-60 galv. Steel, Clark Dietrich or equal.

C. Accessories: Provide as indicated, as recommended by referenced standards, and as required for complete installation.
1. Manufacturers:
   a. Stockton Products.
   b. Or accepted equal.
2. “J” Mold: Casing Bead, No. CDB, G90 galvanized steel.
3. Control Joint: Double “V” expanded flange control joint No. DVZCJ #15, zink.
4. Soffit Vent: Plaster channel screed No. PCS with vent holes, 26 gauge G90 galvanized steel. 2” width.
5. Reveal Mold: Similar to soffit vent, but delete vent holes.
6. Door or Window Head Trim: “F” Drip Mold No. F-D 75-75 with 1/8” weep holes, extruded, anodized aluminum.

D. Anchorages: Tie wire, nails, screws and other approved metal supports, of type and size to suit application.
1. Lath to Metal Studs: Zink plated, Phillips head, wafer head galvanized self-drilling, self-furring screws #8 x 1-1/4”.
2. Lath to Wood Studs: 6d self-furring nails or 1” wire staples with minimum ¾” penetration

to wood studs (not including sheathing thickness). Stapels shall engage not less than three strands of diamond mesh or flat ribbed expanded metal lath or not less than two strands of wire lath.

E. For fastening lath, use approved self-furring nails at wood studs and self-furring screws for metal studs. Self-furring fasteners are required

F. Backing and Sealants:
1. General Lath Backing: “Super Jumbo Tex” by Fortifiber Building Systems.
2. Self Sealing Underlayment: W.R. Grace “Vicor V40”.
3. Butyl Tape: 2” wide x 1/8” industrial butyl adhesive/sealant tape equal to DENSO North America, Inc.
4. Sealant: Equal to Tremco “Vulkem 116” polyurethane.

2.2 PLASTER MIXES

A. Provide plaster mixes in accordance with ASTM C926 as appropriate to the substrate indicated and the approved samples.

B. Mix only as much plaster as can be used in one hour.

C. Mix materials dry, to uniform color and consistency, before adding water.

D. Protect mixes from frost, dust and evaporation.

E. Do not retemper mixes after initial set has occurred.

PART 3 EXECUTION

3.1 PREPARATION

A. Examine areas and substrates, with installer present, and including welded hollow-metal frames, cast-in anchors, and structural framing, for compliance with requirements and other conditions affecting performance.

B. Coordinate suspended work with structural work to ensure inserts and structural anchorage provisions have been installed to receive hangers.
1. Coordinate location of hangers with other work.

C. Prior to application ensure mechanical and electrical services behind surfaces to receive cement plaster have been tested and approved.

D. Ensure metal framing has been properly installed and rigidly secured.

3.2 INSTALLATION

A. Erect furring and lath in accordance with Chapter 25, Section 2507, 2016 California Building Code.

B. Install work true to lines and levels and to provide surface flatness with maximum variation of 1/8" in 10'-0" in any direction.

C. Isolation: Isolate lathing and metal support system where it abuts building structure horizontally, and where partition/wall work abuts overhead structure, to prevent transfer of

building loads into plaster.
1. Install slip or cushion type joints to absorb deflections but maintain lateral support.

D. Frame both sides of expansion joints independently unless otherwise indicated, do not bridge joints with furring and lathing or accessories.

E. Coordinate installation of anchors, blocking, electrical and mechanical work which is to be placed in or behind framing; allow such items to be installed after framing is complete.

F. Install expansion and control joints so plaster areas do not exceed 120 ft^2, and with area sides having a maximum one to two and a half (1:2-1/2) ratio, unless otherwise approved by Architect.

G. Metal Lathing: Apply lath taut, with long dimension perpendicular to supports; secure end laps with tie wire where they occur between supports; lap sides minimum 1-1/2"; secure with tie wires.
1. Apply 2” wide butyl tape under all lath fasteners and over underlayment.
2. Continuously reinforce internal angles.
3. Place 6" wide x 12" long strips of metal lath diagonally at corners of openings; secure rigidly in place.
4. Place 6" wide strips of metal lath at junctions of dissimilar materials; place parallel with dissimilar materials; secure rigidly in place.

H. Installation of Metal Accessories:
1. Fasten in place true to line and in correct relation to adjacent materials and as required to prevent dislodging and misalignment by subsequent operations.
2. Fasten at both ends and at maximum 12" on center along sides.
3. Bring grounding edge of accessories to true lines, plumb, level, and straight.
4. Install accessories to provide required depth of plaster and to bring plaster surface to required plane.
5. Install continuous corner reinforcement for full length of external corners.
6. Install sill and drip screeds with paper sheathing and lath installed over attachment flange of screeds.
7. Beads: Use single length of metal beads wherever length of run does not exceed longest standard stock length available; miter or cope corners.
   a. Provide casing beads where plaster abuts dissimilar construction and at perimeter of openings where edges of plaster will not be concealed by other work.

I. Portland Cement Plaster: Conform to ASTM C926.
1. Cement Plaster: Apply three coat cement plaster system, scratch, brown, and finish coats.
   a. Apply scratch coat to minimum thickness of 3/8"; allow to moist cure for minimum period of 48 hours.
   b. Apply brown coat to minimum thickness of 3/8".
   c. Allow brown coat to cure for minimum 5 days prior to application of finish coat.
   d. Evenly dampen base coat, to ensure uniform suction, and apply finish coat; apply thickness sufficient to secure required texture but in no case less than 1/8".
   e. Apply pre-mixed finish coat in accordance with manufacturer's recommendations.
2. Maintain surface flatness, with maximum variation of 1/8" in 10'-0".
3. Avoid excessive working of surface, delay trowelling as long as possible to avoid drawing excess fines to surface.

J. Finish: Comply with finish manufacturer recommendations and application instructions; finish to match approved sample panel.

3.3 CUTTING AND PATCHING

A. Cut, patch, point, and repair plaster as necessary to accommodate other work and to restore cracks, dents, and imperfections.

B. Repair or replace work to eliminate blisters, buckles, crazing, check cracking, dry-outs, efflorescence, sweat-outs, and similar defects.

C. Finish cutting and patching to match undamaged plaster; patching shall not be visible in finished installation.

3.4 CLEANING

A. Promptly remove plaster from surfaces not indicated to be plastered.

B. Repair surfaces stained, marred or otherwise damaged during plastering.

END OF SECTION

SECTION 09 30 00

TILING

PART 1 GENERAL

1.1 SUMMARY

A. Section Includes: Provide tile installations with accessories, as required for complete installation.
   1. Provide cementitious backer unit tile substrate.
   2. Provide epoxy thin set tile walls.
   3. Provide ceramic tile floor and base finish using the full bed application method.

1.2 REFERENCES

A. ANSI A108.5: Installation of Tile with Latex-Portland Cement Mortar.

B. ANSI A108.6: Installation of Tile with Chemical Resistant Water Cleanable Tile Setting and Grouting Epoxy.

C. ANSI A108.10: Installation of Grout in Tilework.

D. ANSI A108.11: Interior Installation of Cementitious Backer Units.

E. Tile Council of North America (TCNA): Handbook for Ceramic Tile Installation.

1.3 SUBMITTALS

A. Product Data: Submit product data indicating material specifications, characteristics, instructions for using adhesives and grouts and maintenance data.

B. Samples for Verification: Submit three sets of manufacturer's standard samples for selection of colors and patterns.

1.4 QUALITY ASSURANCE

A. Installer to have 5 years of experience and successfully completed 10 previous projects of similar scope, references to be provided at Architects request.

B. Pre-installation conference to be held one week prior to commencing work of this Section.

1.5 PROJECT CONDITIONS

A. Provide sufficient heat and ventilation in areas where ceramic tile work is being performed, so as to allow tile to properly set. Take precautionary measures necessary to ensure excessive temperature changes do not occur.

1.6 WARRANTY

A. Special Warranty: Provide for correcting failures of waterproofing to resist water penetration, except where failures are result of structural failures of building. Hairline cracking of concrete

due to temperature or shrinkage is not considered structural failure.
1. Repair and pay for or replace damaged materials and surfaces.
2. Special Warranty Period: Two years.

PART 2 PRODUCTS

2.1 FLOOR MATERIALS

A. Tile: Mosaic Porcelain tile in types and styles indicated.
1. Manufacturers:
   a. Esmer, Cosmo Politan
   b. American Olean
   c. Dal-Tile Corp.
   d. Or accepted equal.
2. Floor Tile: Provide non-slip units with minimum wet and dry value 0.42 coefficient of friction when tested in accordance with ANSI A137.1-2012 DCOF Acutest.
3. Base and Trim: Provide matching trim pieces, coordinated with sizes and coursing of adjoining flat tile as directed by Architect; types as indicated, as selected by Architect where not indicated.
4. Floor Tile: See Finish Schedule legend.

B. Thin Set: Epoxy thinset bond coat, consisting of latex-cementitious mortar conforming to ANSI A118.4.
1. Manufacturers:
   a. Equal to Laticrete International Inc., “Latapoxy 210 adhesive”.
   b. Or accepted equal.

C. Epoxy Cement Grout: ANSI A118.7, epoxy cementitious type, uniform in color, resistant to shrinkage.

D. Mortar
1. Manufacturers:
   a. Equal to Laticrete #226 Thick Bed Mortar.
   b. Or accepted equal.

E. Reinforcing Mesh: 2" x 2" x 16/16 gauge welded wire mesh (ASTM A82 & A185).

F. Cleaning and Sealing Materials: As recommended by tile and grout manufacturers, such as Bostik Construction Products/Hydroment CeramaSeal.

G. Floor Sealer (Under Epoxy Set Floors): Curing hardener sealer vapor retarder to prevent bond failure of flooring systems such as Creteseal (800-278-4273) CS2000.

2.2 WALL MATERIALS

A. Tile: Ceramic tile in types and styles indicated.
1. Manufacturers:
   a. Glenrose Stone & Tile
   b. Or accepted equal.
2. Color, Style and Pattern: As indicated on Finish Schedule.

B. Latex Thin Set: Thinset bond coat, consisting of latex-cementitious mortar conforming to ANSI A118.4.
1. Manufacturers:

a. Laticrete International Inc., “15 Premium Mastic”.
b. Or accepted equal.

C. Wall Grout: Epoxy Grout - ANSI A118.7, epoxy type, uniform in color, resistant to shrinkage.
1. Manufacturers:
a. Laticrete International Inc., “SpectraLOCK PRO Grout”.
b. Or accepted equal.
2. Color: As selected by Architect from manufacturer’s standard colors.

D. Tile Backer Units: Water-resistant treated core with woven glass-fiber mesh on both faces; approximately 5/8” thick; UL fire rated as required to maintain integrity of fire rated assemblies.
1. Manufacturers:
a. Georgia-Pacific, DensShield Tile Backer.
b. Or accepted equal.

E. Cleaning and Sealing Materials: As recommended by tile and grout manufacturers, such as Bostik Construction Products/Hydroment CeramaSeal.

2.3 MIXES

A. Mix and proportion cementitious materials for site-made leveling coats, setting beds and grout as recommended by the TCNA Handbook for Ceramic Tile Installation.

B. Mix and proportion pre-mixed setting beds and grout materials in accordance with manufacturer's recommendations.

PART 3 EXECUTION

3.1 PREPARATION

A. Prior to installing tile, ensure surfaces are level.
1. Thin Set Tile Tolerance: Maximum surface variation of 1/8" in 10'-0".

B. Ensure surfaces are clean and well cured.

C. Do not commence work until surface conditions are within tolerances required for proper installation; apply latex leveling material where necessary to meet required tolerances.

D. Cementitious Backer Units: Install units in accordance with ANSI A108.11, manufacturer's recommendations, and as required to provide fire ratings indicated on Drawings.

E. Floor Sealer: Apply vapor retarding floor sealer on concrete floors indicated to receive epoxy set tile in accordance with manufacturer recommendations and installation instructions.

3.2 INSTALLATION

A. Install tile in accordance with referenced ANSI Standards and TCA recommendations for type of substrate and indicated setting method.
1. Floor – Cement Mortar Bed: TCNA F114.
2. Latex-Cement Thin Set Wall Tile over Cementitious Backer Units: TCNA W244.

B. Place tile in accordance with patterns indicated on Drawings or as directed by Architect; carefully plan tile layouts, ensure pattern is uninterrupted from one surface to the next and

through doorways.
1. Apply latex thin set to back of tile where necessary to ensure 100% bond between bond coat and substrate; replace tiles which break due to voids between tile and substrate.

C. Neatly cut tile around fixtures and drains; accurately form corners, base, intersections and returns.
1. Base, Coves: Flush cove type with base grout joint on wall, cove tile on floor, unless otherwise indicated.
2. Corners and Edges: Bullnose tile unless otherwise indicated.

D. Locate expansion joints, control joints, contraction joints, and isolation joints where indicated; where not indicated, provide as recommended by TCNA Handbook and as approved by Architect.
1. Install special trim pieces as indicated on Drawings and in accordance with manufacturer recommendations and installation instructions, true to lines and levels indicated and in correct relationship with tile and adjacent materials.

E. Ensure tile joints are uniform in width, subject to normal variance in tolerance allowed in tile size; ensure joints are watertight, without voids, cracks, excess mortar or grout.

F. Sound tile after setting, remove and replace hollow sounding units.

G. Allow tile to set for a minimum 48 hours prior to grouting.

H. Grout tile to comply with recommendations of TCNA and as specified.

I. Leave completed installation free of broken, damaged and faulty tile.

3.3 CLEANING AND SEALING

A. Clean tile surfaces free of foreign matter upon completion of grouting.

B. When recommended by tile manufacturer, apply a protective coat of neutral protective cleaner to completed tile walls and floors. Protect installed tile work with kraft paper or other heavy covering during construction period to prevent staining, damage, and wear.

C. Prohibit foot and wheel traffic from tiled floors for at least 7-days after grouting is completed.

D. Before final inspection, remove protective coverings and rinse neutral cleaner from tile surfaces.

E. Seal tile and grout surfaces where recommended by manufacturer for materials and applications involved; comply with manufacturer's recommendations.

END OF SECTION

SECTION 09 51 13

ACOUSTICAL PANEL CEILINGS

PART 1 GENERAL

1.1 SUMMARY

A. Section Includes: Provide acoustical ceiling systems with exposed suspended metal grid system, trim, and accessories as required for complete finished installation.

1.2 SYSTEM DESCRIPTION

A. Seismic Design Requirements: Comply with California Building Code requirements for seismic bracing of ceiling suspension system, and with ASTM E580.
   1. Ceiling Struts: Provide struts as detailed on Drawings and as required by code, placed maximum 12'-0" on center in both directions and within 6'-0" of each wall.
   2. Slack Wires: Provide safety slack wires, two per fluorescent fixture on diagonally opposite corners and a single wire for each recessed down light.

B. Fire Performance Characteristics: Provide products listed by Underwriters Laboratories (UL) or other independent testing laboratory acceptable to applicable authorities.
   1. Flame Spread/Smoke Density: Provide products meeting code requirements for maximum 25 flame spread and maximum 25 smoke density.
   2. Fire Rated Assemblies: Provide systems rated as part of acoustical material and suspension systems for Floor-Ceiling Assemblies.

1.3 REFERENCES

A. ASTM C635: Metal Suspension Systems for Acoustical Tile and Lay-in Panel Ceilings.

B. ASTM C636: Installation of Metal Ceiling Suspension Systems for Acoustical Tile and Lay-in Panel Ceilings.

C. ASTM E580: Application of Ceiling Suspension Systems for Acoustical Tile and Lay-In Panels in Areas Requiring Seismic Restraint.

1.4 SUBMITTALS

A. Product Data: Furnish manufacturers' literature.

B. Shop Drawings: Clearly indicate grid layout and related dimensioning, junctions with other work and ceiling finishes, and inter-relation of mechanical and electrical items related to system.

C. Samples: Furnish samples of exposed grid finish and each type of ceiling unit.

1.5 QUALITY ASSURANCE

A. Installer Qualifications: Firm with minimum three years successful experience in projects of similar type and scope; acceptable to manufacturer of acoustical units.

1.6 SITE CONDITIONS

A. Do not install ceilings until building is enclosed, sufficient heat is provided, dust-generating activities have terminated and overhead mechanical work is completed, tested and approved.
   1. Do not allow acoustical ceiling units to be exposed to moisture; immediately remove acoustical ceiling units with stains, units with signs of mold, and units with mildew.

B. Allow wet work to dry prior to commencement of installation.

C. Maintain uniform temperatures of minimum 60 degrees F and humidity of 20% to 40% prior to, during and after installation.

1.7 EXTRA STOCK

A. Provide 3% cartons of extra tile or minimum 1 full carton whichever is greater, of each type used for the Owners maintenance use at no additional cost.

PART 2 PRODUCTS

2.1 MATERIALS

A. Suspension System: Comply with ASTM C635, as applicable to type of suspension system required for type of ceiling units indicated.
   1. Manufacturers:
      a. Armstrong World Industries, Inc.
      b. Chicago Metallic Corp.
      c. USG, Interiors, Inc./Donn.
      d. Or accepted equal.
   2. Exposed Grid System: Main runners to be 1 ½” hot rolled channels weighing 1.12 lb/ft.
   3. Attachment Devices: Size for 5 times design load indicated in ASTM C635, Table 1, Direct Hung.
   4. Hanger Wires: 8 gauge.
   5. Straps, Tubes and Angles: Provide galvanized steel as required to meet state and local requirements for seismic design loads.
   6. Structural Class: Minimum heavy-duty system.
   7. Edge Molding: Manufacturer's standard angle molding for edges and penetrations of ceiling, with single flange of molding exposed.
   8. Finish of Exposed Items: See Finish Schedule legend.
   9. Maximum Allowable Deflection: L/360.
   10. Products: Chicago Metallic #1200 or equal. Main Runner No. 200-01. Cross Runner No. 1226-01.
   11. Perimeter Wall Angle: Nominal 1” x 1” “L” angle compatible with manufacturer’s seismic suspended ceiling system.

B. Lay-In Panels: ASTM E1264 type and form as indicated on Drawings.
   1. Manufacturers:
      a. Armstrong World Industries, Inc.
      b. USG Interiors, Inc.
      c. Or accepted equal.

PART 3 EXECUTION

3.1 PREPARATION

A. Furnish layouts for inserts, clips and other supports required to be installed by other trades for support of acoustical ceilings.
   1. Install inserts, clips, and supports where not previously installed and where additional supports are required for complete installation.

B. Measure ceiling area and establish layout of acoustical units to balance border widths at opposite edges of each ceiling; do not use less than half width units at borders.

C. Coordinate with other work supported by or penetrating through ceilings, including light fixtures, HVAC equipment and partition systems.

3.2 INSTALLATION

A. Installation of all suspended acoustical ceilings shall comply with installation requirements outlined in CBC (Title 24 Part 2), Chapter 25A.

B. Install acoustical ceiling systems in accordance with manufacturer's recommendations and ASTM C636.
   1. Finished Ceilings: True to lines and levels and free from warped, soiled or damaged grid or acoustical units.

C. Install ceiling systems in a manner capable of supporting superimposed loads, with maximum permissible deflection of 1/8" in 10'-0".

D. Install after major above-ceiling work is complete; coordinate location of hangers with other work.
   1. Ensure suspension system is located to accommodate fittings and units of equipment that is to be placed after installation of ceiling grid.

E. Where ducts or other equipment prevent regular spacing of hangers, reinforce nearest adjacent hangers and related carrying channels as required to span required distance.

F. Install ceiling suspension system to resist seismic loads as required by state and local codes, including extra hanger wires and compression supports for ceilings and light fixtures.

G. Hang system independently of walls, columns, ducts, pipes and conduit. Where suspension system members are spliced, avoid visible displacement of the longitudinal axis or face plane of adjacent members.

H. Do not support lighting fixtures from or on main runners or cross runners if weight of fixture causes total dead load to exceed deflection capability.
   1. Support fixture loads independently or provide supplementary hangers located within 6" of each corner.

I. Do not install fixtures so main runners and cross runners are eccentrically loaded; where fixture installation would produce rotation of runners, provide stabilizer bars.

J. Install edge moldings at intersection of ceiling and vertical surfaces, using maximum lengths, straight, true to line and level; miter corners.
   1. Provide edge moldings at junctions with other ceiling finishes.

K. Where required form expansion joints to accommodate movement and maintain visual closure without distorting system.

L. Fit acoustic units in place, free from damaged edges or defects detrimental to appearance and function.
   1. Lay directionally patterned units one way with pattern as directed.
   2. Fit border units neatly against abutting surfaces.

M. Install system level, in uniform plane and free from twist, warp and dents.

N. Install hold-down clips where required by applicable codes and where ceiling is within 20'-0" of an exterior door.

O. Adjustment: Adjust sags or twists that develop in ceiling system and replace any part that is damaged or faulty.

END OF SECTION

SECTION 09 64 66.10

REFINISH WOOD ATHLETIC FLOORING

PART 1 GENERAL

1.1 SECTION INCLUDES

A. Stripping and sanding existing wood floor.

B. Patching of existing wood floor.

C. New multi-coat clear floor finish.

1.2 REFERENCES

A. MFMA – Maple Flooring Manufacturers Association.

1.3 SUBMITTALS

A. Product Data.

B. Samples.

C. Installation instructions.

1.4 MAINTENANCE DATA

A. Include recommended cleaning and stain removal methods, materials, and waxes.

1.5 QUALITY ASSURANCE

A. Perform work in accordance with the MFMA published recommendations.

1.6 QUALIFICATIONS

A. Manufacturer: Company specializing in manufacturing the products specified in this Section with minimum three years documents experience.

B. Subcontractor: Company specializing in applying the work of this Section with minimum 10 years documented experience approved by Manufacturer.

1.7 REGULATORY REQUIREMENTS

A. Manufacturer: Company specializing in manufacturing the products specified in this Section with minimum three years documents experience

1.8 DELIVERY, STORAGE AND HANDLING

A. Deliver materials in time to permit moisture content to stabilize to ambient conditions.

1.9 ENVIRONMENTAL REQUIREMENTS

A. Do not install wood flooring until wet construction work is completed.

B. Provide permanent heat, light and ventilation prior to installation.

C. Maintain room temperature as recommended by manufacturer.

1.10 WARRANTY

A. Manufacturer to provide a 1 year warranty.

PART 2 PRODUCTS

2.1 MANUFACTURERS: WOOD SUBFLOOR

A. Basic Coatings

B. Or accepted equal.

2.2 FINISHES

A. Floor Sealer: Two coats of “Hydroline Sealer” as manufactured by Basic Coatings.

B. Floor Finish Coating: Three coats of two component water-based urethane, “Street Shoe Commerical Wood Floor Finish 4X045” as manufactured by Basic Coating. Provide gloss finish.

PART 3 EXECUTION

3.1 EXAMINATION

A. Verify that surfaces are ready for work.

B. Verify that floor surface is clean and obstruction free.

C. Protect walls and base during refinish work.

D. Beginning of installation means installer accepts existing surfaces.

3.2 PREPARATION

A. Strip all wax coatings from floor.

B. Sand flooring down to bare wood.

C. Fill gouges, depressions or holes in wood floor surface.

D. Mop floor clean, removing all dust.

3.3 FINISHING

A. Vacuum floor prior to beginning finish.

B. Mask off adjacent surfaces.

C. Apply first coat, allow to dry and buff with sanding screen to remove irregularities. Vacuum, clean and wipe with damp cloth.

D. Apply second coat. Allow to dry. Lightly buff with sanding screen and vacuum clean.

E. Apply last three coats of finish.

END OF SECTION

SECTION 09 65 00

RESILIENT FLOORING

PART 1 GENERAL

1.1 SUMMARY

A. Section Includes: Provide vinyl composition tile flooring and accessories as required for complete finished installation.

1.2 SYSTEM DESCRIPTION

A. Flammability: Provide materials tested under ASTM E648, Flooring Radiant Panel Test, with results of 0.45 watts/cm^2 or higher.

B. Slip Resistance: Provide materials tested under ASTM D2047, James Slip Test with minimum 0.6 rating for floors.

1.3 SUBMITTALS

A. Product Data: Furnish manufacturer's product literature.

B. Samples: Furnish samples of each type of flooring color and pattern.

1.4 PROJECT CONDITIONS

A. Ensure floor surfaces are smooth and flat with maximum variation of 1/8" in 10'-0".

B. Ensure concrete floors are dry and exhibit negative alkalinity, carbonizing, and dusting.

C. Maintain minimum 70 degree F air temperature at flooring installation area for three days prior to, during, and for 24 hours after installation.

D. Store flooring materials in area of application; allow three days for material to reach same temperature as area.

PART 2 PRODUCTS

2.1 MATERIALS

A. Resilient Tile: 12" by 12" by 1/8" thick; vinyl composition tile conforming to ASTM F1066, Composition 1.
   1. Manufacturers:
      a. Armstrong World Industries, Inc.
      b. Mannington
      c. Tarkett Inc.
      d. Azrock
      e. Or accepted equal.
   2. Color and Pattern: See Finish Schedule Legend

B. Edge Strips: Homogeneous vinyl or rubber, tapered or bullnose edge, color as selected by Architect.

C. Sub-Floor Filler: White premixed latex-cement paste designed for providing thin solid surface for leveling and minor ramping of subsurface to adjacent floor finishes.
   1. Use material capable of being applied and feathered out to adjacent floor without spalling.

D. Primers and Adhesives: Waterproof nontoxic types as recommended by flooring manufacturer for specified material and application.

2.2 TILE SEALER AND WAX

A. Type recommended by flooring manufacturer for material type and location.

PART 3 EXECUTION

3.1 PREPARATION

A. Conform to manufacturer's recommendations for preparation and to ASTM F710.

B. Remove sub-floor ridges and bumps; fill low spots, cracks, joints, holes and defects with sub-floor filler.

C. Clean floor and apply, trowel and float filler to leave smooth, flat hard surface; prohibit traffic until filler is cured.

3.2 INSTALLATION FLOORING

A. Conform to manufacturer's recommendations and installation instructions.
   1. Open floor tile cartons, enough to cover each area, and mix tile to ensure shade variations do not occur within any one area.
   2. Clean substrate.

B. Spread cement evenly in quantity recommended by manufacturer to ensure adhesion over entire area of installation; spread only enough adhesive to permit installation of flooring before initial set.

C. Set flooring in place and press with heavy roller to ensure full adhesion.

D. Lay flooring with joints parallel to building lines to produce symmetrical pattern.

E. Install minimum 1/2 tile at room and area perimeter.

F. Terminate resilient flooring at centerline of door openings where adjacent floor finish is dissimilar.

G. Install edge strips at unprotected and exposed edges where flooring terminates.

H. Scribe flooring to walls, columns, floor outlets and other appurtenances, to produce tight joints.

I. Consult with Architect for floor pattern desired in each area.

J. Edge Strips: Install where edge of tile would otherwise be exposed; butt to flooring without gaps; set in adhesive.

3.3 CLEAN-UP AND PROTECTION

A. Remove excess adhesive from floor, base and wall surfaces without causing damage.

B. Clean, seal and wax floor surfaces in accordance with manufacturer's recommendations.

C. Prohibit traffic from floor for 48 hours after installation.

END OF SECTION

SECTION 09 65 13

RESILIENT BASE AND ACCESSORIES

PART 1 GENERAL

1.1 SUMMARY

A. Section Includes: Provide resilient base and accessories as required for complete installation.

1.2 SYSTEM DESCRIPTION

A. Performance Requirements: Provide materials tested under ASTM E648, Flooring Radiant Panel Test, with results of 0.45 watts/cm^2 or higher.

1.3 SUBMITTALS

A. Product Data: Furnish manufacturer's product literature.

B. Samples: Furnish samples of each base color and type.

1.4 PROJECT CONDITIONS

A. Maintain minimum 70 degree F air temperature at installation area for 3 days prior to, during, and for 24 hours after installation.

B. Store materials in area of application; allow three days for material to reach same temperature as area.

PART 2 PRODUCTS

2.1 MATERIALS

A. Resilient Base: Type TS, TDED with premolded end stops and external corners; 1/8" gage; provide base at floor surfaces unless otherwise indicated. Size: 100’ min length coils, 4’-0” length sections shall not be used.
   1. Type: Extruded rubber.
   2. Manufacturers:
      a. Johnsonite, Inc.
      b. Mannington “BurkeBase”, Type TS
      c. Roppe
      d. Or accepted equal.
   3. Colors: See Finish Schedule legend.

B. Stair Treads with Integrated Risers: See Finish Schedule legend.

C. Transition Strips: See Finished Schedule legend and flooring drawings.

D. Primers and Adhesives: Water-resistant nontoxic types recommended by base manufacturer for specified material and application.

PART 3 EXECUTION

3.1 INSTALLATION

A. Apply to walls, columns, pilasters, casework, and other permanent fixtures in rooms and areas where base is required.
   1. Fit joints tight and vertical; maintain minimum measurement of 18" between joints.

B. Miter internal corners; use molded sections for external corners and exposed ends.

C. Install base on solid backing, adhere tightly to wall and floor surfaces; fill voids along top edge of base with manufacturer's recommended adhesive filler.

D. Scribe and fit to door frames and other obstructions.

E. Install straight and level to variation of plus or minus 1/8" over 10'-0".

3.2 CLEAN-UP

A. Remove excess adhesive from floor, base and wall surfaces without causing damage.

B. Clean surfaces in accordance with manufacturer's recommendations.

END OF SECTION

SECTION 09 65 16

RESILIENT SHEET FLOORING

PART 1 GENERAL

1.1 SUMMARY

A. Section Includes: Sheet vinyl flooring and accessories.

1.2 REGULATORY REQUIREMENTS

A. Provide resilient sheet flooring material to meet the following fire test performance criteria as tested by a recognized independent testing laboratory:
   1. ASTM E 648 Critical Radiant Flux of 0.45 watts per sq. cm. or greater, Class I.
   2. ASTM E 662 (Smoke Generation) Maximum Specific Optical Density of 450 or less.

1.3 SUBMITTAL ITEMS

A. Shop Drawings: Seaming plan, covering details, and manufacturer’s technical data, installation and maintenance instructions for resilient sheet flooring and accessories including the manufacturer’s maximum acceptable relative humidity (RH) percentage(s) and maximum pH level for each type and style of resilient flooring to be installed.

B. Samples for verification: Manufacturer’s standard samples showing the required colors for flooring, welding rods, and applicable accessories.

C. Product Data: Manufacturer’s technical data for each type of resilient sheet flooring and accessory, including installation instructions.

1.4 PROJECT CONDITIONS

A. Deliver materials in good condition to the jobsite in the manufacturer's original unopened containers that bear the name and brand of the manufacturer, project identification, and shipping and handling instructions.

B. Store materials in a clean, dry, enclosed space off the ground, and protected from the weather and from extremes of heat and cold. Protect adhesives from freezing. Store flooring, adhesives and accessories in the spaces where they will be installed for at least 48 hours before beginning installation.

C. Perform Vapor emission and pH testing prior to installation of flooring.

D. Ensure floor surfaces are smooth and flat with a maximum variation of 1/8” in 10’-0”.

E. Maintain a minimum temperature in the spaces to receive the flooring and accessories of 65ºF and a maximum temperature 85ºF for at least 48 hours before, during, and for not less than 48 hours after installation. Thereafter, maintain a minimum temperature of 55ºF in areas where work is completed. Protect all materials from the direct flow of heat from hot-air registers, radiators, or other heating fixtures and appliances.

F. Install flooring and accessories after the other finishing operations, including painting, have

been completed. Close spaces to traffic during the installation of the flooring. Do not install flooring over concrete slabs until they are sufficiently dry to achieve a bond with the adhesive, in accordance with the manufacturer's recommended bond and moisture tests.

1.5 QUALITY ASSURANCE

A. Select an installer who is competent in the installation of resilient sheet flooring using heat-welded seams.

B. Provide types of flooring and accessories supplied by one manufacturer, including leveling and patching compounds, and adhesives.

PART 2 PRODUCTS

2.1 MANUFACTURERS

A. Manufacturers:

a. Armstrong Flooring
b. Mannington Mills Inc.
c. Tarkett Johnsonite
d. Or accepted equal.

2.2 RESILIENT SHEET FLOORING MATERIALS

A. Resilient Sheet Flooring: Refer to Interior Finish Schedule.

B. Provide vinyl weld rod as produced by flooring manufacturer, and intended for heat welding of seams. Color shall be compatible with field color of flooring or as selected by Architect to contrast with field color of flooring. Color selected from the range currently available from flooring manufacturer.

2.3 WALL BASE MATERIALS

A. For integral flash cove base: Provide integral flash cove wall base by extending sheet flooring, height as noted on Finish Schedule, using adhesive, welding rod, and accessories recommended and approved by the flooring manufacturer.

B. For top set wall base: Provide 1/8 in. thick, height as noted on Finish Schedule, color-integrated wall base with a matte finish, conforming to ASTM F 1861.

2.4 ADHESIVES

A. Provide manufacturer's recommended adhesives for flooring. Contractor to test for maximum moisture content and relative humidity of flooring substrate (concrete) for each area type to determine compliance with adhesive manufacturer’s requirements.

2.5 ACCESSORIES

A. For patching, smoothing, and leveling monolithic subfloors provide Ardex Forti Finish Fast-Setting Cement-Based Patch and Skim Coat (provide manufacturer's recommended materials for patching of subfloors). All areas that are filled, leveled or tapered with cement-based patch and skim coat shall be primed with Mapei ECO Prim Grip in accordance with the mfrs installation instructions.

B. For sealing joints between the top of wall base or integral cove cap and irregular wall surfaces such as masonry, provide plastic filler applied according to the manufacturer's recommendations.

C. Provide top edge trim caps anodized aluminum for integral flash cove as approved by the Architect.

D. Provide a fillet support strip for integral cove base with a minimum radius of 1 in. of wood or plastic.

E. Provide transition/reducing strips tapered to meet abutting materials.

F. Provide threshold of thickness and width as shown on the drawings.

G. Provide resilient edge strips of equal gauge to the flooring, homogeneous vinyl or rubber composition, tapered or bullnose edge, with color to match or contrast with the flooring, or as selected by the Architect from standard colors available.

PART 3 EXECUTION

3.1 INSPECTION

A. Examine subfloors prior to installation to determine that surfaces are smooth and free from cracks, holes, ridges, and other defects that might prevent adhesive bond or impair durability or appearance of the flooring material. Maximum variation allowed is 1/8” in 10 feet.

B. Inspect subfloors prior to installation to determine that surfaces are free from curing, sealing, parting and hardening compounds; residual adhesives; adhesive removers; and other foreign materials that might prevent adhesive bond. Visually inspect for evidence of moisture, alkaline salts, carbonation, dusting, mold, or mildew.

C. Perform bond and moisture tests on concrete floors to determine if surfaces are below the resilient sheet flooring manufacture’s maximum RH percentages manufacturer’s maximum moisture content, and exhibit negative alkalinity, carbonization, or dusting.

D. Report conditions contrary to contract requirements that would prevent a proper installation. Do not proceed with the installation until unsatisfactory conditions have been corrected.

E. Failure to call attention to defects or imperfections will be construed as acceptance and approval of the subfloor. Installation indicates acceptance of substrates with regard to conditions existing at the time of installation.

3.2 PREPARATION

A. Smooth concrete surfaces, removing rough areas, projections, ridges, and bumps, and filling low spots, control or construction joints, and other defects in accordance with Manufacturers recommendations. If a ‘Water Vapor Emission Control System’ is to be applied, install the barrier system prior to any sub-floor filler work.

B. Remove paint, varnish, oils, release agents, sealers, and waxes. Remove residual adhesives as recommended by the flooring manufacturer. Remove curing and hardening compounds not compatible with the adhesives used, as indicated by a bond test or by the compound manufacturer's recommendations for flooring. Avoid organic solvents.

C. Perform pH tests on concrete floors regardless of their age or grade level. All test results shall be documented and retained.

D. Vacuum or broom-clean surfaces to be covered immediately before the application of flooring. Make subfloor free from dust, dirt, grease, and all foreign materials.

3.3 INSTALLATION OF SHEET FLOORING

A. Install flooring in strict accordance with the latest edition of Manufacturer's Installation Instructions.

B. Install flooring wall to wall before the installation of floor-set cabinets, casework, furniture, equipment, movable partitions, etc. Extend flooring into toe spaces, door recesses, closets, and similar openings as shown on the drawings.

C. If required, install flooring on pan-type floor access covers. Maintain continuity of color and pattern within pieces of flooring installed on these covers. Adhere flooring to the subfloor around covers and to covers.

D. Scribe, cut, and fit or flash cove to permanent fixtures, columns, walls, partitions, pipes, outlets, and built-in furniture and cabinets.

E. Adhere flooring to the subfloor without cracks, voids, raising and puckering at the seams. Roll with a 100-pound (45.36 kilogram) roller in the field areas. Hand-roll flooring at the perimeter and the seams to assure adhesion. Refer to specific rolling instructions of the flooring manufacturer.

F. Lay flooring to provide a minimum number of seams. Avoid cross seams, filler pieces, and strips. Match edges for color shading and pattern at the seams in compliance with the manufacturer's recommendations.

G. Install flooring with adhesives, tools, and procedures in strict accordance with the manufacturer's written instructions. Observe the recommended adhesive trowel notching, open times, and working times.

H. Prepare heat-welded seams with special routing tool supplied for this purpose and heat weld with vinyl welding rod in seams. Use methods and sequence of work in conformance with written instructions of the flooring manufacturer. Finish all seams flush and free from voids, recesses, and raised areas.

I. Provide integral flash cove wall base where indicated on the drawings, including cove fillet support strip and top edge cap trim. Construct flash cove base in accordance with the flooring manufacturer's instructions. Heat-weld seams as specified for those on the floor.

3.4 INSTALLATION OF ACCESSORIES

A. Apply top set wall base to walls, columns, casework, and other permanent fixtures in areas where top-set base is required. Install base in lengths as long as practical, with inside corners fabricated from base materials that are mitered or coped. Tightly bond base to vertical substrate with continuous contact at horizontal and vertical surfaces.

B. Fill voids with plastic filler along the top edge of the resilient wall base or integral cove cap on masonry surfaces or other similar irregular substrates.

C. Place resilient edge strips tightly butted to flooring, and secure with adhesive recommended

by the edge strip manufacturer. Install edge strips at edges of flooring that would otherwise be exposed.

D. Apply overlap metal edge strips where shown on the drawings, before flooring installation. Secure units to the substrate, complying with the edge strip manufacturer's recommendations.

3.5 CLEANING AND PROTECTION

A. Perform initial maintenance according to the latest edition of manufacturer’s installation maintenance recommendations.

B. Protect installed flooring as recommended by the flooring manufacturer against damage from rolling loads, other trades, or the placement of fixtures and furnishings.

END OF SECTION

SECTION 09 68 15

WALK-OFF TILE CARPETING

PART 1 GENERAL

1.1 SECTION INCLUDES

A. Entrance Carpet Tiles.

B. Accessories.

1.2 REFERENCES

A. ANSI/ASTM E648 - Critical Radiant Flux of Floor Covering Systems Using a Radiant Heat Energy Source.

B. ASTM E84 - Surface Burning Characteristics of Building Materials.

C. FS DDD-C-0095 - Carpet and Rugs, Wool, Nylon, Acrylic, Modacrylic, Polyester, Polypropylene.

1.3 SUBMITTALS

A. Product Data: Provide product data on specified products, describing physical and performance characteristics; sizes, patterns, colors available, and method of installation.

B. Shop Drawings: Indicate carpet tile pattern

C. Samples: Submit two samples 12 x 24 inch in size illustrating color and pattern for each carpet material specified.

1.4 QUALITY ASSURANCE

A. Manufacturer: Company specializing in carpet with five years minimum experience.

B. Installer: Company with five years minimum documented experience approved by manufacturer.

1.5 ENVIRONMENTAL REQUIREMENTS

A. Store materials for three days prior to installation in area of installation to achieve temperature stability.

B. Maintain minimum 70 degrees F ambient temperature three days prior to, during, and 24 hours after installation of materials.

1.6 EXTRA MATERIALS

A. Provide 5% or 10 tiles of carpeting of each color and type specified, whichever is greater.

PART 2 PRODUCTS

2.1 MANUFACTURERS

A. Shaw Industries / Patcraft

B. Or accepted equal.

2.2 MATERIALS

A. Refer to Finish Schedule Legend

2.3 ACCESSORIES

A. Sub-Floor Filler: White premix latex; type recommended by carpet manufacturer.

B. Primers and Adhesives: As recommended by the manufacturer.

C. Edge Strips.

PART 3 EXECUTION

3.1 EXAMINATION

A. Verify that substrate surfaces are smooth and flat with maximum variation of 1/8 inch in 10 ft and are ready to receive work.

B. Verify concrete floors are dry to a maximum moisture content of 7 percent; and exhibit negative alkalinity, carbonization, or dusting.

C. Beginning of installation means acceptance of existing substrate and site conditions.

3.2 PREPARATION

A. Remove sub-floor ridges and bumps. Fill low spots, cracks, joints, holes, and other defects with sub-floor filler.

B. Apply, trowel, and float filler to leave smooth, flat, hard surface.

C. Prohibit traffic until filler is cured.

D. Vacuum floor surface.

3.3 INSTALLATION – ENTRY CARPET

A. Install using quarter turned method.

B. Apply carpet and adhesive in accordance with manufacturers' instructions. M-1609V

C. Lay out carpet tiles for approval.

D. Verify carpet tiles match before cutting to ensure minimal variation between dye lots.

E. Locate change of color or pattern between rooms under door centerline.

F. Cut and fit carpet tiles around interruptions.

G. Fit carpet tight to intersection with vertical surfaces without gaps.

3.4 CLEANING

A. Remove access adhesive from floor, base, and wall surfaces without damage.

B. Clean and vacuum carpet surfaces.

3.5 PROTECTION

A. Prohibit traffic from carpet areas for 24 hours after installation.

END OF SECTION

SECTION 09 74 13

WOOD WALL COVERINGS

PART 1 GENERAL

1.1 SECTION INCLUDES

A. Interior Plywood Panel wainscot.

1.2 REFERENCE

A. ASTM E.108 Spread-of-flame test

B. ASTM E-136 - Surface Burning Characteristics

C. U.S. National Standards PS 1-09

1.3 SUBMITTALS

A. Product Data.

B. Shop Drawings: Indicate on shop drawings, material profile, jointing pattern, jointing details, fastening methods and installation details.

C. Samples: Submit one sample 16" x 16" minimum illustrating typical pattern.

1.4 WARRANTY

A. Provide 5-year transferable limited warranty.

PART 2 PRODUCTS

2.1 MATERIAL

A. Plywood Wainscot Panels – “Super Ply” sanded, Grade AC, plywood panels with plug-free imported face veneer, 15/32” thick, 4’ x 8’ panels, as manufactured by Roseburg Forest Products, or accepted equal.

2.2 FASTENERS

A. Nails: 6d galvanized finish nails.

B. Construction Adhesive: Liquid Nails LN-901 heavy duty adhesive.

2.3 ACCESSORIES

A. Trim: Wood

B. Sealant: Vulcum one part polyurethane.

PART 3 EXECUTION

3.1 EXAMINATION

A. Verify that surfaces are ready to receive work and field measurements are as shown on shop drawings.

B. Beginning of installation means acceptance of existing substrate.

3.2 INSTALLATION

A. All panels to be plumb, level and square.

B. Attach panels with fasteners at 6” on center at edges and as needed in field to hold until adhesive sets. Apply adhesive per manufacturer’s recommendations.

C. Cut all panels and siding with a circular saw. Sand all edges after cut.

D. Cut material neatly around all projections and install trim pieces as detailed.

E. Leave 1/16 inch maximum gap between all panel or siding butt joints. Apply sealant to installed panel prior to setting next panel. Wipe off excess sealant squeezed out of butt joint.

F. All workmanship shall conform to finish carpentry requirements of the Woodwork Institute of California.

END OF SECTION

SECTION 09 77 30

FIBERGLASS WALL PANELS

PART 1 GENERAL

1.1 SUMMARY

A. Section Includes: Provide shop finished glass fiber reinforced polyester resin fabricated wall panels (FRP) and fiberglass reinforced laminate wall panels (FRL), with trim pieces and accessories as required for complete installation.
   1. Systems shall be acceptable for use in food preparation areas by USDA and applicable authorities as well as bathrooms, toilets, housekeeping and Janitor Closets.

1.2 SUBMITTALS

A. Product Data: Furnish manufacturer's literature indicating design parameters, thickness, fabrication details, tolerances, colors, finishes, methods of support and anchorages. Furnish Maintenance Instructions including manufacturer's recommended cleaning materials and application methods, and precautions in use of cleaning materials that may be detrimental to surfaces.

B. Shop Drawings: Provide plans and elevations to indicate locations and seaming details for all panels.

C. Samples: Furnish wall panel and exposed trim samples.

1.3 DELIVERY, STORAGE, AND HANDLING

A. Store panels in clean and dry area where temperatures are maintained at minimum 40 degrees F with normal humidity.
   1. Do not store in upright position.

B. Take precautionary measures with adhesives and solvents to prevent fire hazards.

1.4 PROJECT CONDITIONS

A. Maintain surfaces and materials at minimum 60 degrees F three days before and during application period.

B. Provide continuous ventilation during work and after installation of wall covering.

1.5 SCHEDULING

A. Schedule installation of wall paneling as late in construction schedule as possible to prevent damage during construction.

PART 2 PRODUCTS

2.1 MANUFACTURERS

A. Fiberglass Reinforced Plastic (FRP) Wall Panels:
   1. Kemlite Company/Kemlite Fire-X Glasbord Plus.

B. Fiber Reinforced Laminate (FRL) Panel System:
   1. Panolam Industries/Panolam FRL Laminate, Class A.

C. Vinyl Moldings at FRP:
   1. Marlite PVC Trims

D. Stainless Steel Moldings at FRL.

E. Caulking for FRL:
   1. Color Rite, Inc.

2.2 MATERIALS

A. Panels:
   1. Fiberglass reinforced plastic (FRP) panel system:
      a. Thickness: 0.090" nominal thickness.
      b. Fire-Rating: Class I (UL Class A), maximum 25 flame spread, 450 smoke developed, ASTM E84.
      c. Surface: Smooth surface as approved by Architect.
      d. Color: Refer to Finish Schedule legend.
   2. Fiberglass Reinforced Laminate (FRL) panel system:
      a. Thickness: 0.088”
      b. Size: 48” wide by up to 144” long
      c. Fire-Rating: Rating of 25 or less per ASTM E84
      d. Smoke Developed: 55, tested to ASTM E84
      e. Colors & Patterns: Refer to Finish Schedule legend.

B. Primer: Provide non-staining nontoxic release coat primer as recommended by wall panel manufacturer where panels are applied to gypsum board.
   1. Primer: Type designed to allow removal of wall paneling from gypsum board without damaging paper facing of board, and without premature separation of wall paneling from wall.

C. Adhesive: Panel manufacturer's standard nontoxic, waterproof adhesive suitable for substrates indicated and for application indicated.

D. Trim Pieces at FRP: Manufacturer's standard matching moldings and trim pieces as required for complete, finished installation, and as required for joints, corners and panel edges.

E. Trim Pieces at FRL: Manufacturer’s standard stainless steel moldings and trim pieces as required for a complete installation and as required at all panel edges, corners and joints.

F. Seam Treatment for FRL Only: Colored acrylic/silicone caulk. Color to match laminate.

G. Mechanical Fasteners: Not permitted unless concealed.

PART 3 EXECUTION

3.1 INSPECTION

A. Ensure surfaces to receive wall paneling are clean, true and free of irregularities, do not

commence with work until surfaces are satisfactory.

B. Ensure wall surface flatness tolerance does not vary more than 1/8" in 10'-0", nor vary at a rate greater than 1/16" per running foot.

C. Schedule installation of wall paneling as late in construction schedule as possible to prevent damage during construction.

3.2 INSTALLATION

A. Handle and install wall panels in accordance with manufacturer's recommendations and installation instructions.
   1. Cope and miter trim pieces.

B. Securely adhere panels to wall surfaces; use blind nailing methods as required to support panels until adhesive dries; exposed mechanical fasteners shall not be acceptable.
   1. Install panels in maximum size increments available.

C. Install FRL panels applying adhesive with notched trowel to entire backside of panels.

D. Using ‘J’ type roller, remove trapped air and ensure proper adhesion.

E. Remove excess adhesive from edges; wipe seam clean with dry cloth towel.

F. Install wall paneling before installation of plumbing, bases, hardware, and similar accessories.

G. Trim: At FRP panels utilize “J” edge, “T” joint, and corner trim at all panel joints and edges. At FRL panels utilize edge and corner trim. Vertical panel joints shall be butt joints with no trim.

3.3 CLEANING

A. Clean panel system in accordance with manufacturer's instructions.

B. Remove debris and leave areas neat and clean.

C. Replace accessories.

END OF SECTION

SECTION 09 84 13

FIXED SOUND-ABSORPTIVE PANELS

PART 1 GENERAL

1.1 SUMMARY

A. Section Includes: Embossed acoustical wall panel system and installation accessories.

1.2 REFERENCES

A. ASTM International:
   1. ASTM E84 Standard Test Method for Surface Burning Characteristics of Building Materials.

1.3 SYSTEM DESCRIPTION

A. Performance Requirements:
   1. Provide acoustical wall panel assembly designed and tested to provide surface burning characteristics (ASTM E84) Class A.
   2. Provide acoustical wall panel system which has been manufactured, fabricated and installed to provide Noise Reduction Coefficient (NRC) rating as follows:
      a. NRC rating = .95

1.4 SUBMITTALS

A. Product Data: Submit manufacturer's product data and installation instructions.
   1. Recommended procedures for normal cleaning and removal of stains including precautions in use of cleaning materials that may be detrimental to surfaces.

B. Shop Drawings: Indicate locations, seaming diagrams and details for mounting and edge treatment.

C. Samples: Submit selection and verification samples: [6 inch × 6 inch (152 × 152 mm) sample for each wall panel unit required, showing full range of exposed texture to be expected in completed work.

D. Quality Assurance/Control Submittals: Submit the following:
   1. Certificates: Submit manufacturer's certificate that products meet or exceed specified requirements.

1.5 QUALITY ASSURANCE

A. Installer Qualifications: Utilize an installer having demonstrated experience on projects of similar size and complexity.

1.6 DELIVERY, STORAGE & HANDLING

A. Storage and Protection: Store materials protected from exposure to harmful environmental conditions and at temperature and humidity conditions recommended by the manufacturer.
   1. Prevent soiling, physical damage or wetting.

2. Store cartons open at each end to stabilize moisture content and temperature.

1.7 PROJECT/SITE CONDITIONS

A. Environmental Requirements:
1. Do not install acoustical panels until building is closed in and HVAC system is operational.
2. Locate materials onsite at least 72 hours before beginning installation to allow materials to reach temperature and moisture content equilibrium.
3. Maintain the following conditions in areas where acoustical materials are to be installed 24 hours before, during and after installation:
   a. Relative Humidity: 65 - 75%.
   b. Uniform Temperature: 55 - 80 degrees F.

PART 2 PRODUCTS

2.1 ACOUSTICAL WALL PANEL SYSTEM

A. Manufacturer: KIREI

B. Acoustical Wall panel systems, including the following:
1. Embossed Interior Wall Panels:
   a. Thickness: 0.35 inches.
   b. Height: 110.2” inches.
   c. Length: 44.5” inches
   d. Color: Refer to Finish Schedule legend.
   e. Mounting Style: [“A”] [“C-20”] [“C-40”] [“D-20”]. Provide all fasteners, [Furring strips] and [OCF 703 fiberglass insulation] for a complete single source installation.

2.2 ACCESSORIES

A. Provide accessories as follows:
1. Adhesive as recommended by manufacturer.

PART 3 EXECUTION

3.1 MANUFACTURER’S INSTRUCTIONS

A. Comply with the instructions and recommendations of the acoustical wall panel system manufacturer.

3.2 EXAMINATION

A. Site Verification of Conditions:
1. Examine surfaces scheduled to receive suspended or directly attached acoustical units for unevenness, irregularities and dampness that would affect quality and execution of work.
2. Do not proceed with installation of wall panel system until unacceptable conditions are corrected.

3.3 INSTALLATION

A. Cover field cut edges by means of trim or other moldings.

3.4 CLEANING

A. Clean exposed surfaces of acoustical panel, trim, moldings and suspension members to comply with manufacturer's instructions for cleaning.

B. Touch up any minor finish damage.

C. Remove and replace work that cannot be successfully cleaned and repaired to permanently eliminate evidence of damage.

3.5 PROTECTION

A. Protect installed work from damage due to subsequent construction activity, including temperature and humidity limitations and dust control, so that the work will be without damage and deterioration at the time of acceptance by the County.

END OF SECTION

SECTION 09 90 00

PAINTING AND COATING

PART 1 GENERAL

1.1 SUMMARY

A. Section Includes:
1. Provide painting and finishing of exposed items and surfaces.
   a. Specified surface preparation, priming and coats of paint are in addition to shop-priming and surface treatment specified under other sections of work.
   b. Painting and finishing include field finishing of select shop finished items where indicated as required to match adjacent surfaces, such as mechanical grilles and registers.
   c. Field paint exposed bare and covered pipes, ducts, and hangers, exposed steel and iron work, and primed metal surfaces of equipment installed under mechanical and electrical work in occupied spaces.

B. Surfaces To Be Painted:
1. All exposed interior and exterior surfaces are to be painted unless listed under “Surfaces Not To Be Painted” and/or unless clearly indicated otherwise.

C. Surfaces Not To Be Painted:
1. Finished items including finished metal surfaces.
2. Walls and ceilings in concealed areas and generally inaccessible areas.
3. Moving parts of operating mechanical and electrical units.
4. Labels: Keep equipment identification and fire rating labels free of paint.
5. Plastic smoke stops and weather-stripping at doors.

1.2 SUBMITTALS

A. Product Data:
1. Submit product data on all finishing products.
2. Submit manufacturer's application instructions.

B. Samples:
1. Samples for Selection: Submit a complete set of color chips that represent the full range of manufactures color samples available.
2. Samples for Verification: Submit three samples 8-1/2 x 11 inch in size illustrating color, texture and sheen for each surface-finishing product selected.

1.3 QUALITY ASSURANCE

A. Regulatory Requirements: All products shall comply with the California Green Building Code. No products containing VOCs shall be permitted.

B. Provide manufacturers 5 year written performance guarantee for elastomeric paint and application error (materials and labor).

C. Conform to California Building Code for flame/fuel/smoke rating requirements for finishes.

1.4 DELIVERY, STORAGE, AND HANDLING

A. Deliver materials to job site in original, new and unopened packages and containers bearing manufacturer's name and label, with:
   1. Name of material, color and sheen.
   2. Manufacturer's name, stock number and date of manufacture.
   3. Contents by volume, for major pigment and vehicle constituents.
   4. Thinning and application instructions.
   5. Color number
   6. VOC content

1.5 SITE CONDITIONS

A. Apply water-base paints when temperature of surfaces and surrounding air are between 50 and 90 degrees F.

B. Apply solvent-thinned paints when temperature of surfaces and surrounding air are between 45 and 95 degrees F.

C. Do not apply paint in rain, fog or mist; or when relative humidity exceeds 85 percent; or to damp or wet surfaces.

D. Painting may be continued during inclement weather if areas to be painted are enclosed and heated within temperature limits specified.

1.6 EXTRA STOCK

A. Provide a one gallon container of each paint to Owner.

B. Label each container with color, color number, texture, and room locations, in addition to the manufacture's label.

PART 2 PRODUCTS

2.1 MANUFACTURERS

Acceptable Manufacturers:

A. Sherwin Williams

B. Dunn-Edwards Corp.

C. P.P.G. Industries, Inc., Coatings and Resins Division.

D. Benjamin Moore

E. Or accepted equal.

2.2 MATERIALS

A. Definition: "Paint" as used herein means coating systems including primers, emulsions, enamels, stains, sealers and fillers, whether used as prime, intermediate or finish coats.

B. General: Unless otherwise indicated, provide factory-mixed coatings. When required, mix coatings to correct consistency in accordance with manufacturer's instructions before application. Do not reduce, thin, or dilute coatings or add materials to coatings unless such procedure is specifically described in manufacturer's product instructions.

C. Material Quality: Provide top line quality commercial grade (professional painter) paints; materials not bearing manufacturer's identification as a best-grade product shall not be acceptable.
   1. Primers: Provide premium grade primers recommended by paint manufacturer for substrates indicated and for finish systems specified.
   2. Undercoats and Barrier Coats: Provide undercoat paints produced by same manufacturer as finish coats; use only thinners approved by paint manufacturer, and use only within recommended limits.
   3. Finish Coats: Provide finish coats capable of being washed with mild detergent without loss of color, sheen, or pigments.
      a. Color pigments: Pure, non-fading, Zero VOC, applicable types to suit substrates and service indicated; no lead content permitted.
   4. Finish Coat Coordination: Provide finish coats that are compatible with prime paints, undercoats, and barrier coats used.
      a. Review other Specification sections in which prime paints are provided; ensure compatibility of total coatings systems.
      b. Upon request from other trades furnish information on characteristics of finish materials proposed for use.
      c. Provide barrier coats over incompatible primers or remove and prime as required.
      d. Notify Architect in writing of any anticipated problems in use of specified coating systems with substrates primed by others.

D. Colors and Finishes: Prior to commencement of painting work, Architect will provide a color selection for surfaces to be painted.
   1. Use of proprietary names in color selection is not intended to imply exclusion of equivalent products of other manufacturers.
   2. Final acceptance of colors will be from samples applied on site.

PART 3 EXECUTION

3.1 PREPARATION

A. Inspection: Examine areas and conditions under which painting work is to be applied.
   1. Start of painting work indicates acceptance of surfaces and conditions of surfaces and conditions within any particular area.
   2. Where exposed items or surfaces are not specifically mentioned in Schedules, paint same as adjacent similar materials or areas.
   3. Do not paint over dirt, rust, scale, grease, moisture, scuffed surfaces, or conditions detrimental to a durable paint film.

B. Perform preparation and cleaning procedures in accordance with paint manufacturer's instructions and as specified for substrate condition.

C. Correct minor defects and clean surfaces which affect work of this Section.

D. Remove hardware, accessories, and items in place and not to be painted, or provide protection prior to surface preparation and painting; after painting reinstall removed items.

E. Clean surfaces before applying paint; remove oil and grease prior to mechanical cleaning; program cleaning so contaminants from cleaning process do not fall onto wet, newly painted surfaces.

F. Gypsum Board Surfaces: Latex fill minor defects. Spot prime defects after repair.

G. Cementitious Materials: Prepare by removing efflorescence, chalk, dirt, grease, oils, and by

roughening as required to remove glaze.
1. Determine alkalinity and moisture content of surfaces to be painted.
2. If surfaces are found to be sufficiently alkaline to cause blistering and burning of finish paint, neutralize before application of paint.
3. Do not paint over surfaces where moisture content exceeds manufacturer's printed directions.

H. Wood: Clean wood surfaces of dirt, oil, and other foreign substances; sandpaper smooth surfaces exposed to view, and dust off.
1. Scrape and clean seasoned knots and apply thin coat of recommended knot sealer, before application of priming coat.
2. Prime, stain, or seal wood required to be job-painted immediately upon delivery to job; prime edges, ends, faces, undersides, and backsides of wood.
3. After priming, fill holes and imperfections in finish surfaces with putty or plastic wood-filler; sandpaper smooth when dry.

I. Ferrous Metals: Touch up shop-applied prime coats wherever damaged using same type of primer as applied in shop or barrier coat compatible with finish paint.
1. Bare Surfaces: Clean surfaces that are not galvanized or shop-coated, of oil, dirt, loose mill scale and other foreign substances by solvent or mechanical cleaning.
2. Galvanized Surfaces: Clean free of oil and surface contaminants, using non-petroleum based solvent; primer and touch-up primer to be zinc-rich primer.

J. Store materials in tightly covered containers; maintain containers used in storage, mixing and application of paint in a clean condition, free of foreign materials and residue.

K. Stir materials before application to produce mixture of uniform density, and stir as required during application; do not stir surface film into material, if necessary, strain material before using.

3.2 PROTECTION

A. Protect elements surrounding the work of this Section from damage or disfiguration.

B. Repair damage to other surfaces caused by work of this Section.

C. Furnish drop cloths, shields, and protective methods to prevent spray or droppings from disfiguring other surfaces.

3.3 APPLICATION

A. Apply paint in accordance with manufacturer's directions; use applicators and techniques best suited for substrate and type of material being applied.
1. Apply additional coats when stains or blemishes show through final coat, until paint is a uniform finish, color and appearance.
2. Provide extra attention to assure dry film thickness at corners and crevices is equivalent to that of flat surfaces.
3. Paint surfaces behind movable equipment and furniture same as similar exposed surfaces; paint surfaces behind permanently-fixed equipment and furniture with prime coat only.
4. Paint back sides of access panels and removable or hinged covers to match exposed surfaces.
5. Finish doors on tops, bottoms and side edges same as faces.
6. Sand lightly between each succeeding enamel coat and each varnish coat.

B. Scheduling Painting: Apply first coat to surfaces that have been cleaned, pretreated or prepared for painting as soon as practicable after preparation.
   1. Allow time between successive coatings to permit proper drying.
   2. Do not recoat until paint feels firm and does not deform or feel sticky under moderate thumb pressure.

C. Minimum Coating Thickness: Apply materials at not less than manufacturer's recommended spreading rate, to establish a total dry film thickness as recommended by coating manufacturer.

D. Prime Coats: Apply to all surfaces, even if item has shop primed surface; recoat primed and sealed surfaces where there is evidence of suction spots or unsealed areas in first coat.

E. Finish Coats: Provide even texture; leave no laps, irregularity in texture, skid marks, or other surface imperfections.
   1. Opaque Finishes: Provide opaque, uniform finish, color and coverage; cloudiness, spotting, holidays, brush marks, runs, sags, rope-i-ness, and other surface imperfections are not acceptable.
   2. Transparent and Stained Finishes: Produce glass smooth surface film of even luster; provide with no cloudiness, color irregularity, runs, brush marks, orange peel, nail holes, and other surface imperfections.

F. Completed Work: Match approved samples for color, texture and coverage; remove, refinish or repaint work not accepted.

3.4 FINISHING MECHANICAL AND ELECTRICAL EQUIPMENT

A. Paint all exposed equipment. Roof mounted equipment is to be painted to match roof color and exposed equipment at interior of building is to be painted to match ceiling color. Note pre-finished equipment is still to be painted.

B. Remove unfinished louvers, grilles, covers, and access panels on mechanical and electrical components and paint separately.

C. Prime and paint insulated and exposed pipes, conduit, boxes, insulated and exposed ducts, hangers, brackets, collars and supports, and accessories. Paint over prefinished equipment when exposed.

D. Replace identification markings on mechanical or electrical equipment when painted accidentally.

E. Paint interior surfaces of air ducts, and convector and baseboard heating cabinets that are visible through grilles and louvers with one coat of flat back paint, to limit of sight line. Paint dampers exposed behind louvers, grilles, and convector and baseboard cabinets to match face panels.

F. Paint exposed conduit and electrical equipment occurring in finished areas.

G. Paint both sides and edges of plywood backboards for electrical and telephone equipment before installing equipment.

H. Replace electrical plates, hardware, light fixture trim, and fittings removed prior to finishing.

3.5 PAINTING SYSTEMS: SUBSTITUTED PRODUCTS MUST BE “EQUAL TO OR BETTER IN QUALITY” THAN THE SPECIFIC PRODUCTS LISTED BELOW

A. Exterior Work: Provide the following paint systems:
   1. General Metal: Semigloss sheen.
      a. 1st Coat: One coat rust inhibitive DTM primer white.
         SW – DTM Wash Primer B66 Series
      b. 2 Coats: 100% acrylic Industrial DTM enamel.
         SW – Pro Industrial DTM finish B66 @ 6-10 Mils Wet, 2-4 Mils Dry

   2. Steel - Shop Primed: Semigloss sheen.
      a. 1st Coat: One additional coat of rust inhibitive primer.
         SW - Pro Industrial Rust Inhibitive Metal Primer B66-310 @ 5-10 Mils Wet, 2-4 Mils Dry
      b. 2 Coats 100% Acrylic DTM Industrial enamel.
         SW – Pro Industrial DTM finish B66 @ 6-10 Mils Wet, 2-4 Mils Dry

   3. Steel - Galvanized: Semigloss sheen.
      a. Solvent wash.
      b. Galvanized metal primer.
         SW - Pro Industrial Rust Inhibitive Metal Primer B66-310 @ 5-10 Mils Wet, 2-4 Mils Dry)
      c. 2 coats 100% acrylic DTM Waterbased Industrial enamel.
         Sherwin Williams – Pro Industrial DTM finish @ 6-10 Mils Wet, 2-4 Mils Dry

   4. Aluminum – not anodized, to be painted: Semigloss sheen.
      a. Solvent wash.
      b. 1-Coat aluminum metal primer,
      c. SW - Pro Industrial Rust Inhibitive Metal Primer B66-310 @ 5-10 Mils Wet, 2-4 Mils Dry)
      d. 2 coats 100% acrylic DTM Industrial enamel.
         SW – Pro Industrial DTM finish @ 6-10 Mils Wet, 2-4 Mils Dry

   5. Steel - Unprimed Painted: Semigloss sheen.
      a. 1 coat rust inhibitive primer.
      b. SW - Pro Industrial Rust Inhibitive Metal Primer B66-310 @ 5-10 Mils Wet, 2-4 Mils Dry)
      c. 2 coats 100% acrylic DTM Industrial enamel.
         SW – Pro Industrial DTM finish @ 6-10 Mils Wet, 2-4 Mils Dry

   6. Concrete, clear floor sealer:
      a. Prime Coat: Interior/exterior clear concrete floor sealer (water based).
      b. Intermediate Coat: Interior/exterior clear concrete floor sealer (water based).
      c. Topcoat: Interior/exterior clear concrete floor sealer (water based).
         SW- H&C Clear Concrete Sealer

   7. Wood, opaque finish: Semigloss sheen.
      a. 1 coat 100% acrylic primer
         SW - PrepRite ProBlock Primer B25 @ 4.0 Mils Wet, 1.4 Mils Dry
      b. 2 coats 100% acrylic DTM Industrial enamel
         SW – Pro Industrial DTM finish @ 6-10 Mils Wet, 2-4 Mils Dry

B. Interior Work: Provide the following paint systems:
   1. Gypsum Board – Eggshell sheen.
      a. One Coat “Hamilton Prep-Coat Plus" prior to application of gypsum board texture (masking by others).
      b. One coat PVA primer
         SW - ProMar 200 Zero Primer B28 @ 4.0 Mils Wet, 1.4 Mils Dry
      c. Two coats acrylic latex.

SW - Scuff Tuff Interior S24-50 @ 4.0 Mils Wet, 1.4 Mils Dry

2. Steel - Unprimed: Semigloss sheen.
   a. One coat rust inhibitive primer.
   b. SW - Pro Industrial Rust Inhibitive Metal Primer B66-310 @ 5-10 Mils Wet, 2-4 Mils Dry)
   c. Two coats acrylic latex enamel, semi-gloss.
      SW - Solo SG A47 4.0 Mils Wet, 1.4 Mils Dry

3. Steel - Primed: Semigloss sheen.
   a. One additional coat of rust inhibitive primer.
   b. SW - Pro Industrial Rust Inhibitive Metal Primer B66-310 @ 5-10 Mils Wet, 2-4 Mils Dry)
   c. Two coats acrylic latex enamel, semi-gloss.
      SW - Solo SG A47 4.0 Mils Wet, 1.4 Mils Dry

4. Steel - Galvanized: Semigloss sheen.
   a. One coat galvanized metal primer.
   b. SW - Pro Industrial Rust Inhibitive Metal Primer B66-310 @ 5-10 Mils Wet, 2-4 Mils Dry)
   c. Two coats acrylic latex enamel, semi-gloss.
      SW - Solo SG A47 4.0 Mils Wet, 1.4 Mils Dry

5. Opaque Finished Wood: Eggshell sheen.
   a. 1st Coat: Primer undercoat.
   b. SW - PrepRite ProBlock Primer B25 @ 4.0 Mils Wet, 1.4 Mils Dry
      2nd and 3rd Coat~~: Alkyd~~ or 100% acrylic enamel.
      SW - Solo SG A47 4.0 Mils Wet, 1.4 Mils Dry

6. Stained Wood: Satin Rubbed Sheen
   a. 1st Coat: Wood stain
   b. 2nd Coat: Sanding sealer
      3rd and 4th Coat: Acrylic modified urethane.

C. Sheens: Comply with ASTM D523, reflectance of paint.
   1. Flat: 1-10.
   2. Satin: 15-30.
   3. Eggshell: 30-45.
   4. Semigloss: 45-75.
   5. Gloss: 75-100.

3.6 SCHEDULE - SURFACES TO BE PAINTED, EXTERIOR

A. Steel doors and frames.

B. Galvanized metal flashings, copings, etc. (Not factory finished).

C. Exposed structural steel.

D. Fiber cement siding and trim.

E. Metal pipe hand and guardrails and other steel fabrications.

F. Downspouts and brackets.

G. Metal louvers.

H. Wood Trim.

I. Metal gate frames & panels.

3.7 SCHEDULE - SURFACES TO BE PAINTED, INTERIOR

A. Steel doors and frames.

B. Gypsum board.

C. Steel access ladders.

D. Access doors.

E. Exposed structural steel.

F. Wood trim and wood beams.

G. Metal ducts, supports and louvers.

H. Exposed electrical conduit.

I. Exposed pipes and supports.

J. Light fixture supports and raceways.

K. Exposed Mechanical Equipment.

3.8 COLOR SELECTION

A. Specific colors: See Finish Schedule legend.

3.9 CLEAN-UP, PROTECTION, AND REPAIR

A. Clean-Up: During progress of work, remove discarded paint materials, rubbish, cans and rags from site at end of each work day.
   1. Clean glass and paint-spattered surfaces immediately by proper methods of washing and scraping, using care not to scratch or damage finished surfaces.

B. Protection: Protect work of other trades, whether to be painted or not; correct damage by cleaning, repairing or replacing, and repainting, as acceptable to Architect.
   1. Provide "Wet Paint" signs to protect newly-painted finishes.
   2. Remove temporary protective wrappings provided by others for protection of their work, after completion of painting operations.

C. Repair: At completion of work of other trades, touch-up and restore damaged surfaces or defaced painted surfaces following manufacturer's recommendations for touch up and repair. Repair any defects that will hinder the performance of the coatings.

END OF SECTION

SECTION 10 12 00

DISPLAY CASES

PART 1 GENERAL

1.1 SUMMARY

A. This Section includes the following:
   1. Trophy display cases.

1.2 SUBMITTALS

A. Product Data: For each type of product indicated.

B. Shop Drawings: Include plans, elevations, sections, details, and attachments to other work.
   1. Show location of tack assembly seams and joints.

C. Samples: For each exposed finish.

1.3 QUALITY ASSURANCE

A. Fire-Test-Response Characteristics: Provide fabrics with the surface-burning characteristics indicated, as determined by testing identical products per ASTM E 84 by UL or another testing and inspecting agency acceptable to authorities having jurisdiction. Identify materials with appropriate markings of applicable testing and inspecting agency.

PART 2 PRODUCTS

2.1 ACCEPTABLE MANUFACTURERS:

A. ADP

B. Claridge

C. Greensteel

D. Or accepted equal.

2.2 DISPLAY CASES

A. Standard: Equal to Model 390 Recessed Trophy Case by Claridge Products, sizes as shown.

B. Components
   1. Framing: Anodized Aluminum with 4” face.
   2. Doors: Aluminum frame with ¼” tempered glass and locks.
   3. Interior Finish: Fabricork tackable back panel.
   4. Shelves: 10” wide glass with brackets – 2 full width.

2.3 FABRICATION

A. Fabricate display cases to requirements indicated for dimensions, design, and thickness and finish of materials, and to sizes indicated on Drawings.

B. Fabricate cabinets and door frames with reinforced corners, mitered to a hairline fit, with no exposed fasteners.

C. Fabricate shelf standards plumb and at heights to align shelf brackets for level shelves.

D. Aluminum Finish: Class II, clear anodic coating complying with AAMA 611.

PART 3 EXECUTION

3.1 INSTALLATION

A. General: Install units in locations and at mounting heights indicated on Drawings. Keep perimeter lines straight, plumb, and level. Provide grounds, clips, backing materials, adhesives, brackets, anchors, trim, and accessories necessary for complete installation.

B. Recessed Display Cases: Attach units to wall framing with fasteners at not more than 16 inches o.c. Attach aluminum trim over edges of recessed display cases and conceal grounds and clips. Attach trim with fasteners at not more than 24 inches o.c.

C. Comply with requirements in Division 26 for connecting illuminated display cases. After installation is complete, install new fluorescent lamps.

D. Install display case shelving level and straight.

END OF SECTION

SECTION 10 14 00

SIGNAGE

PART 1 GENERAL

1.1 SUMMARY

A. Section Includes: Provide general signage as indicated complete with attachment devices and accessories as required for complete installation.

1.2 SUBMITTALS

A. Product Data: Furnish manufacturer's literature and indicate each sign type, style, color, and method of attachment.

B. Shop Drawings: Furnish listing of sign types, lettering and locations, along with overall dimension of each sign.
   1. Computerized Output: Furnish computerized samples of applied copy signs and graphics at full scale duplicating final appearance.

C. Samples: Furnish full size samples where requested.

1.3 QUALITY ASSURANCE

A. Access for Persons with Disabilities: Provide signs for assuring access for persons with disabilities in accordance with state and federal regulations.
   1. California Regulations: Comply with California Building Code.
   2. Federal Regulations: Comply with 2010 Americans with Disabilities Act Accessibility Standards (ADA-ABA).

1.4 DELIVERY, STORAGE, AND HANDLING

A. Package separately or in like groups of names, labeled as to names enclosed; include installation template, attachment system and installation instructions.

PART 2 PRODUCTS

2.1 MANUFACTURERS

A. Rowmark

B. ASI Sign Systems Inc.

C. Mohawk Engraving Company, Incorporated.

D. Best Sign Systems Inc.

E. Cameo, California Metal Enameling Co.

F. Vomar Products, Inc.

G. Or accepted equal.

2.2 MATERIALS

A. CBC Toilet Room Signs: Provide colored plastic signs, conforming to CBC requirements for signs for toilet rooms, with inset symbols and characters; concealed mounting system.
   1. Total Thickness: 0.25".
   2. Provide signs required by California Code of Regulations Title 24.
      a. Men's Room: 12" equilateral triangle, vertex pointing up.
      b. Ladies' Room: 12" diameter circle.
      c. Unisex Toilet: 12" diameter circle with equilateral triangle, vertex pointing up, inscribed in circle; circle and triangle each 0.25" thick.
   3. Colors: As selected to contrast with doors.
   4. Symbols: As selected from manufacturer's standard symbols.
   5. Adhesive: Type as recommended by sign manufacturer for type of substrate involved.

B. ADAAG Toilet Room Signs: Provide colored plastic signs, conforming with ADAAG requirements for signs for permanent rooms, with inset symbols and with raised and Braille characters; concealed mounting system.
   1. Comply with ADAAG requirements for raised and Braille characters, pictorial symbols, finish, and contrasts requirements.
   2. Colors: As selected by Architect.

C. Entry Decals: Provide minimum 6" square decals with international symbol of accessibility white on blue background with white border, applied to glass at accessible entry doors.

D. Braille Door Signs: Provide colored plastic signs at both sides of each door, conforming to CBC requirements for signs for permanent rooms, with raised and Braille characters; concealed mounting system.
   1. Colors: As selected by Architect.
   2. Size and Style: As indicated on Drawings.

E. General Sign Requirements:
   1. Character Type: Characters on signs shall be raised 1/32 inch minimum and shall be sans serif uppercase characters accompanied by California Grade 2 Braille. See Note 5 below.
   2. Character Size: Raised characters shall be a minimum of 5/8 inch and a maximum of 2 inches high.
   3. Finish and Contrast: Characters, Symbols and their background shall contrast and have a non-glare finish.
   4. Proportions: The uppercase letter “O” of characters shall be between 60% and 110% of the height of uppercase letter “I” and the stroke thickness of uppercase letter “I” shall be 15% max. of the height of the character, 11B-703.2.4, 11B-703.2.6.
   5. Braille: California Grade 2 Braille shall be used wherever Braille is required in other portions of these standards. Braille dimensions shall comply with CBC 11B-703.3.1.

F. Sign Material:
   1. Material: Rowmark ADA Alternative or equal. Single-ply Impact Modified Acrylic
   2. Finish: Matte / Non-Glare
   3. Thickness: 1/32”, 1/16”, 1/8”
   4. Usage: Interior, Exterior & Tactile Signage
   5. Engraving Method: Laser / Rotating carbide
   6. Color: As selected from Manufacturer’s full color line.

PART 3 EXECUTION

3.1 INSTALLATION

A. General: Install signs in accordance with manufacturer recommendations and installation instructions, free from distortions and defects.

B. California Toilet Room Signs: Install signs on doors after doors are painted and finished.
   1. Location: Mount signs centered at 60" above finished floor.
   2. Install centered and level, in line, in accordance with the manufacturer's recommendations.
   3. Clean and polish, remove excess adhesive.

C. CBC Toilet Room Signs: Install signs on walls after surfaces on which they are to be mounted are painted and finished.
   1. Location: Mount signs with base of Braille minimum 48” above finished floor and base of highest text maximum 60” above finish floor per CBC.
   2. Install level, in line, in accordance with the manufacturer's recommendations and ADAAG requirements. Signs containing tactile characters shall be located so that a clear floor space of 18" x 18" min. centered on the tactile characters is provided beyond the arc of any door swing between the closed and 45 degree open position per CBC.
   3. Clean and polish, remove excess adhesive.

D. Entry Signs: Install in locations as approved by Architect.

E. Stair Signs: Install signs inside stairwell after walls are finished, at locations immediately adjacent to door on strike side as required by referenced code, readily visible when door is open.
   1. Height: Mount signs with base of Braille minimum 48” above finished floor and base of highest text maximum 60” above finish floor per CBC.

F. Tactile and Braille Exit Door Signs: Install at doors with lighted “EXIT” signs; apply after walls are finished.
   1. Location: Mount signs 48” minimum above finished floor measured from baseline of lowest Braille cells and 60” maximum above finished floor measured from baseline of the highest line of raised characters on strike side of door
   2. Install level, in line, in accordance with the manufacturer's recommendations and CBC requirements. Signs containing tactile characters shall be located so that a clear floor space of 18" x 18" min. centered on the tactile characters is provided beyond the arc of any door swing between the closed and 45 degree open position per CBC.
   3. Clean and polish, remove excess adhesive.

END OF SECTION

SECTION 10 14 16

PLAQUES

PART 1 - GENERAL

1.1 DESCRIPTION

A. Furnish and install cast plaques, including all backing, structural support, anchorage, and accessories for a complete installation.

1.2 SUBMITTALS

A. Product Data: Manufacturer's construction details relative to materials, dimensions of individual components, profiles, and finishes for each type of plaque required.

B. Shop Drawings: Furnish shop drawings for fabrication and erection. Include plans, elevations, and large-scale sections of typical members and other components. Show anchors, grounds, reinforcement, accessories, layout, and installation details.

1. For plaques supported by or anchored to permanent construction, furnish setting drawings, templates, and directions for installation of anchor bolts and other anchors.

C. Samples: Furnish samples of each exposed material, showing finish, color, and qualities of fabrication and design.

PART 2 - PRODUCTS

2.1 MANUFACTURERS

A. Gemini Incorporated

B. West Coast Plaque Company

C. Or accepted equal.

2.2 MATERIALS

A. Cast Bronze

B. Fasteners: Use concealed fasteners fabricated from metals that are not corrosive to the sign material and mounting surface.

2.3 CAST PLAQUES

A. Castings shall be formed from Bronze, free from pits, scale, sand holes, or other defects.

B. Hand-tool and buff borders and raised copy to produce manufacturer's standard satin polished finish.

C. Art work to depict Armed Forces logos in bas relief.

D. Background texture: Leatherette

E. Background color: Duranodic Bronze

F. Raised Copy: horizontal brushed grain

G. Clear coat: Semi-Gloss

H. Specialty bronze finishes: Light Oxidized, or Oxidized

I. Standard mounting options: Blind Mount

J. Borders: Single Line

2.4 SCHEDULE OF PLAQUES

A. Front Entry Ramp: (2) 12” diameter Armed Forces Logos for each Branch – 12 Total

B. Auditorium Balcony Wall: 24” diameter Armed Forces Logos for each Branch – 6 Total

C. Dedication Plaque: 20” x 16” – Text to be provided by Architect

PART 3 - EXECUTION

3.1 INSTALLATION

A. Locate where indicated and as required by applicable codes and secure with specified fasteners.

B. Install level, plumb and at height indicated or required, with surfaces free from distortion or other appearance defects.

C. Unless otherwise indicated, mount plaques by inserting threaded studs into tapped lugs on the back of the plaque. Set in predrilled holes filled with quick-setting cement.

3.2 CLEANING AND PROTECTION

A. At completion of installation, clean soiled surfaces in accordance with manufacturer's instructions. Protect units from damage until final acceptance.

END OF SECTION

SECTION 10 14 53

TRAFFIC SIGNAGE

PART 1 GENERAL

1.1 SUMMARY

A. Section Includes: Provide general site signage as indicated complete with attachment devices and accessories as required for complete installation.

1.2 SUBMITTALS

A. Product Data: Furnish manufacturer's literature and indicate each sign type, style, color, and method of attachment.

B. Shop Drawings: Furnish listing of sign types, lettering and locations, along with overall dimension of each sign.
   1. Computerized Output: Furnish computerized samples of applied copy signs and graphics at full scale duplicating final appearance.

1.3 QUALITY ASSURANCE

A. Access for Persons with Disabilities: Provide signs for assuring access for persons with disabilities in accordance with state and federal regulations.
   1. California Regulations: Comply with California Building Code.
   2. Federal Regulations: Comply with Americans with Disabilities Act Accessibility Guidelines (ADAAG).

1.4 DELIVERY, STORAGE, AND HANDLING

A. Package separately or in like groups of names, labeled as to names enclosed; include installation template, attachment system and installation instructions.

PART 2 PRODUCTS

2.1 MANUFACTURERS

A. Sign Comp, Grand Rapids, MI.

B. Or accepted equal.

2.2 SIGN ASSEMBLIES

A. Porcelain Signs at Parking: Provide porcelain enamel on steel sign with beaded text and symbols meeting requirements of California Building Code and with ADAAG.
   1. At entry to parking provide state required sign indicating unauthorized vehicles parking in accessible parking spaces may be towed at owner's expense.
   2. Verify location and telephone number of place to be towed with Owner.
   3. At parking spaces provide California required sign, minimum 70 sq. inches, with symbol indicating accessibility.

4. At van accessible parking spaces provide required "VAN PARKING" signs.

PART 3 EXECUTION

3.1 INSTALLATION

A. Stop and Parking Signs: Provide complete assembly, including painted posts, as needed; mount signs at heights required.

END OF SECTION

SECTION 10 21 13

TOILET COMPARTMENTS

PART 1 GENERAL

1.1 SUMMARY

A. This Section includes:
   1. Toilet Enclosures: Floor anchored and overhead braced.
   2. Provide attachment hardware and integral accessories as required for complete installation.

1.2 REFERENCES

A. Americans with Disabilities Act, Accessibility Guidelines (ADAAG).

B. California Building Code: California Code of Regulations, Title 24, Part 2, requirements for providing accessibility for persons with disabilities.

1.3 SUBMITTALS

A. Product Data: Submit manufacturer's literature.

B. Shop Drawings: Clearly indicate partition layouts, swing of doors, elevations, anchorage and mounting details, panel construction, hardware, finishes and relevant dimensions.

C. Samples: Submit samples of toilet compartment as well as pilaster shoe and sleeve.

1.4 QUALITY ASSURANCE

A. Access for Persons with Disabilities: Comply with 2022 California Building Code and Americans with Disabilities Act Accessibility Guidelines (ADAAG).
   1. Door Width: Provide minimum 32" clear door openings when front entry, minimum 34" clear door openings when side entry.
   2. Spacing: Provide minimum 32" clearance between water closet and inside edge of partition on side away from grab bars, minimum 60" clear width, and front space as applicable. At least one side partition shall provide a toe clearance of 9 inches minimum above the finish floor and 6 inches deep minimum beyond the compartment-side face of the partition, exclusive of partition support members. Partition components at toe clearances shall be smooth without sharp edges or abrasive surfaces.
   3. Reinforcing: Provide reinforcing for grab bars indicated to be partition mounted.
   4. Urinal Screens: Provide minimum 30" clear space at urinal.

1.5 WARRANTY

A. Minimum 15 year material warranty.

B. Furnish written warranty signed by installer for one year period from date of substantial completion.

PART 2 PRODUCTS

2.1 SOLID-POLYMER UNITS

A. Manufacturers:
1. Santana/Comtec by Scranton Products.
2. Accurate Partitions Corp.
3. Or accepted equal.

B. Door, Panel, and Pilaster Construction: Solid, high-density polyethylene (HDPE), not less than 1 inch thick, seamless, with eased edges, and with homogenous color and pattern throughout thickness of material. Chrome plated strike/keeper, coat hook, latch, bumper and integral pivot type hinges.

C. Texture, Color and Pattern: One texture, color and pattern in each room as selected by Architect from manufacturer's full range of textures, colors and patterns.

D. Pilaster Shoes and Sleeves: Manufacturer's standard design.
1. Polymer Color and Pattern: Contrasting with pilaster, as selected by Architect from manufacturer's full range of colors and patterns.

E. Brackets (Fittings): Full-Height (Continuous) Type, manufacturer's standard metal design.

F. Overhead Cross Bracing: As recommended by manufacturer and fabricated from aluminum.

G. Urinal Screens: Wall mounted. 24” maximum depth from wall, 36” required minimum clearance between partitions.

PART 3 EXECUTION

3.1 PREPARATION

A. Examine site conditions to which work is to be applied.

B. Take site dimensions affecting this work.

C. Ensure correct spacing and size of plumbing fixtures; take special note of fixtures in compartments indicated to be designed for persons with disabilities to assure clearances complying with access regulations.

D. Ensure correct location of built-in framing, anchorage, and bracing, where required.

3.2 INSTALLATION

A. Install units in accordance with manufacturer recommendations and installation instructions, secure, plumb, level, and square.

B. Leave 1/2" space between wall, panels and end pilasters.

C. Attach panel brackets securely to walls using anchor devices.

D. Attach panels and pilasters to bracket with through sleeve tamper proof bolts and nuts.

E. Locate headrail joints at pilaster centerlines.

F. Provide for adjustment of floor variations with screw jack through steel saddles integral with pilaster; conceal floor fastenings with stainless steel shoes.

G. Equip each door with hinges, latch (the accessible compartment latch shall be mounted between 34" and 44" AFF), and coat hook/bumper combination (the coat hook/bumper shall be mounted maximum 48” AFF).

H. Where toilet compartment door swings into a wall, provide wall/door stop by compartment mfr.

I. Install door strike keeper and door bumper on each pilaster in alignment with door latch.

J. Accessible water closet compartment door is to have door pulls on both sides and to be self-closing, Hardware is accessible per 11B-309.4.

K. Adjust and align hardware to uniform clearance at vertical edges of doors not exceeding 3/16".

L. Adjust hinges to locate doors in partial open position when unlatched, except adjust hinges to return doors to closed position at stalls designed for use by persons with disabilities.

M. Anchor urinal screen panels to walls with two panel brackets.

N. For additional information and requirements for the accessible water closet compartments please see the drawings.

3.3 CLEANING

A. Field touch-up of scratches and defaced finishes will not be permitted; replace damaged, scratched and marred defective materials with new, undamaged materials.

B. Remove protective maskings; clean surfaces free of oil and imperfections.

END OF SECTION

SECTION 10 26 13

CORNER GUARDS

PART 1 GENERAL

1.1 SUMMARY

A. Section Includes:
1. Stainless steel corner guards.
2. Mounting adhesive and accessories as required for complete finished installation.

1.2 SUBMITTALS

A. Product Data: Furnish manufacturer's product literature.

B. Samples: Furnish samples of corner guards.

1.3 PROJECT CONDITIONS

A. Maintain minimum 70 degree F air temperature at installation area for three days before, during, and for 24 hours after installation.

PART 2 PRODUCTS

2.1 STAINLESS STEEL CORNER GUARDS

A. Manufacturers:
1. Bobrick Washroom Equipment, Inc./B-633 Corner Guard.
2. Bradley Corporation/Model 991 Corner Guard.
3. Or accepted equal.

B. Materials:
1. Corner Guard: ASTM A666, Type 304 stainless steel with satin finish; minimum 18 gage.
2. Size: 2" by 2" by height of wall.
3. Attachment: Manufacturer's recommended adhesive for type of wall.

PART 3 EXECUTION

3.1 INSTALLATION

A. Install guards in accordance with manufacturer's recommendations and installation instructions.

B. Install straight and level to variation of plus or minus 1/8" over 10 feet; variation shall not be cumulative.

END OF SECTION

SECTION 10 26 23

PROTECTIVE WALL COVERING

PART 1 GENERAL

1.1 SUMMARY

A. This section includes the following types of wall protection systems:
   1. Wall Covering.

B. References:
   1. American Society for Testing and Materials (ASTM):
      a. ASTM B221 - 14 Standard Specification for Aluminum and Aluminum-Alloy Extruded Bars, Rods, Wire, Profiles, and Tubes.
      b. ASTM D543 - 20 Standard Practices for Evaluating the Resistance of Plastics to Chemical Reagents.
      c. ASTM E84 - 20 Standard Test Method for Surface Burning Characteristics of Building Materials.
      d. ASTM E695 - 03(2015)e1 Standard Test Method of Measuring Relative Resistance of Wall, Floor, and Roof Construction to Impact Loading.

1.2 SUBMITTALS

A. Product Data:
   1. Product data and detailed specifications for each system component and installation accessory required, including installation methods for each type of substrate.

B. Shop drawings:
   1. Showing locations, extent and installation details of wall covering products.

C. Samples:
   1. Submit the following samples, as proposed for this work, for verification of color, texture, pattern and thickness:
   2. Sample of each product specified.

D. Test Reports:
   1. Provide reports from a qualified independent testing laboratory showing compliance of each component with requirements indicated.

1.3 FIELD MEASUREMENTS

A. Verify that field measurements are as indicated on drawings.

1.4 QUALITY ASSURANCE

A. Installer qualifications: Engage an installer who has no less than 3 years' experience in installation of systems similar in complexity to those required for this project.

B. Manufacturer's qualifications: Not less than 5 years' experience in the production of specified products and a record of successful in-service performance.

C. Code compliance: Assemblies shall conform to all applicable codes including IBC, CBC, Life Safety, and CA 01350.

D. Fire performance characteristics: Provide engineered PETG wall protection system components with UL label indicating that they are identical to those tested in accordance with ASTM E84 for Class A/1 characteristics listed below:
   1. Flame spread: 25 or less
   2. Smoke developed: 450 or less

E. Impact strength: Provide wall protection components that have been tested in accordance with the applicable provisions of ASTM E695.

F. Chemical and stain resistance: Provide wall protection system components with chemical and stain resistance in accordance with ASTM D543.

G. Color match: Provide wall protection components that are color matched in accordance with the following:
   1. Delta Ecmc of no greater than 1.0 using CIELab color space.

H. Single source responsibility: Provide all components of the wall protection system manufactured by the same company to ensure compatibility of color, texture, and physical properties.

1.5 DELIVERY, STORAGE AND HANDLING

A. Deliver materials to the project site in unopened original factory packaging clearly labeled to show manufacturer.

1.6 PROJECT CONDITIONS

A. Materials must be acclimated in an environment of 65 to 80 degrees F (18-24 deg. C) for at least 3 days prior to beginning the installation.

B. Installation areas must be enclosed and weatherproofed before installation commences.

PART 2 PRODUCTS

2.1 MANUFACTURERS

A. INPRO – IPC Door and Wall Protection Systems.

B. Or accepted equal.

2.2 MATERIALS

A. RICOCHET Flexible Wall Protection

B. Or accepted equal.

2.3 FABRICATION

A. General: Fabricate wall covering to comply with requirements indicated for design, dimensions, detail, finish, and sizes.

2.4 FINISHES

A. General: Comply with NAAMM "Metal Finishes Manual" for recommendations relative to applications and designations of finishes.

2.5 ACCESSORIES

A. Romain Pro 555, extreme tack wallcovering adhesive, or accepted equal.

B. Primer, caulk, and trims as recommended by manufacturer.

PART 3 EXECUTION

3.1 EXAMINATION

A. Verification of conditions: Examine areas and conditions under which work is to be performed and identify conditions detrimental to proper or timely completion.
   1. Do not proceed until unsatisfactory conditions have been corrected.

3.2 PREPARATION

A. Surface preparation: Prior to installation, clean substrate to remove dirt, debris, and loose particles. Perform additional preparation procedures as required by manufacturer's instructions.

B. Protection: Take all necessary steps to prevent damage to material during installation as required in manufacturer's installation instructions.

3.3 INSTALLATION

A. Install the work of this section in strict accordance with the manufacturer's recommendations using approved adhesive.

B. Temperature at the time of installation must be between 65 and 80 degrees F (18-24 deg. C) and be maintained for at least 72 hours after the installation to allow for proper adhesive set-up.

C. Relative humidity shall not exceed 80 percent.

D. Do not expose wall covering to direct sunlight during or after installation. This will cause the surface temperature to rise, which in turn will cause bubbles and delamination.

3.4 CLEANING

A. General: Immediately upon completion of installation, clean material in accordance with manufacturer's recommended cleaning method.

B. Remove surplus materials, rubbish, and debris resulting from installation as work progresses and upon completion of work.

3.5 PROTECTION

A. Protect installed materials to prevent damage by other trades. Use materials that may be easily removed without leaving residue or permanent stains.

END OF SECTION

SECTION 10 28 13

TOILET ACCESSORIES

PART 1 GENERAL

1.1 SUMMARY

A. Section Includes:
1. Provide toilet accessories with attachment hardware and rough-in frames as required for complete, operational installation.
2. Provide accessories in toilet rooms, and other rooms as noted on the drawings.

1.2 SUBMITTALS

A. Product Data: Provide product data on accessories describing size, finish, details of function, attachment methods and blocking requirements and locations prior to wall framing. Submit manufacturer's installation instructions for all specified products.

1.3 QUALITY ASSURANCE

A. Access for Persons with Disabilities: Comply with California Building Code and Americans with Disabilities Act Accessibility Guidelines (ADAAG).

1.4 DELIVERY, STORAGE AND HANDLING

A. Deliver inserts and rough-in frames to jobsite at appropriate time for building in.

B. Do not deliver accessories to site until rooms in which they are to be installed are ready to receive them.

C. Pack accessories individually, protect each item and its finish.

1.5 PROJECT CONDITIONS

A. Protect adjacent or adjoining finished surfaces from damage during installation of work of this section.

B. Before starting work notify Architect in writing of conditions detrimental to installation or operation of units.

C. Verify with Architect exact location of accessories.

D. Coordinate the work of this Section with the placement of internal wall reinforcement and reinforcement to receive anchor attachments.

1.6 WARRANTY

A. Special Warranty: Replace mirrors that exhibit signs of desilvering or distortion.
1. Special Warranty Period: Two years.

PART 2 PRODUCTS

2.1 MANUFACTURERS

A. Bobrick Washroom Equipment, Inc.

B. Bradley Corporation.

C. American Specialties, Inc.

D. NuTone

E. Or accepted equal.

2.2 MATERIALS

A. Stainless Steel Sheet: ASTM A666, commercial grade, Type 302/304, gages as standard with manufacturer of specified items.

B. Stainless Steel Tubing: ASTM A269, commercial grade, seamless welded.

C. Sheet Steel: ASTM A1008, cold rolled stretcher leveled; minimum G90 galvanized coating, ASTM A924 and A653.

D. Adhesive: Epoxy type contact cement as recommended by accessory manufacturer.

E. Fasteners, Screws, and Bolts: Hot dip galvanized; as recommended by accessory manufacturer for component and substrate.

F. Keys: Provide universal keys for access to toilet accessory units requiring internal access for servicing and supply.
   1. Provide minimum six keys to Owner representative.

G. Mirror Glass: ASTM C1036, q1 mirror select clear float glass with full silver coating, copper coating and organic coating; minimum 1/4" thick.

2.3 FABRICATION

A. Weld and grind smooth joints of fabricated components.

B. Form exposed surfaces from one sheet of stock, free of joints.

C. Fabricate units with tight seams and joints, exposed edges rolled; hang doors and access panels with continuous piano hinges; provide concealed anchorage where possible.

D. Provide steel anchor plates and anchor components for installation on building finishes.

E. Form surfaces flat without distortion; maintain flat surfaces without scratches and without dents; finish exposed edges eased, free of sharp edges where potential exists for physical contact.

F. Back paint components where contact is made with building finishes, to prevent electrolysis.

G. Hot dip galvanize ferrous metal anchors and fastening devices.

H. Assemble components in shop; package complete with anchors and fittings.

2.4 FINISHES

A. Exposed Finishes: Stainless steel, number 4, satin finish; satin chrome finish acceptable where stainless steel not available for accessory item listed or scheduled.

B. Concealed Surfaces: Treat and clean, spray-apply one coat primer and baked enamel finish.

PART 3 EXECUTION

3.1 PREPARATION

A. Provide templates and rough-in measurements.

3.2 INSTALLATION

A. Install accessories in accordance with manufacturer's printed instructions using fasteners appropriate to substrate.

B. Install true, plumb and level, securely and rigidly anchored to substrate.

C. Use tamper-proof, security type fasteners.

D. Adjust accessories for proper operation and verify mechanisms function smoothly.

E. Replace damaged and defective items.

F. Clean and polish exposed surfaces after removing temporary labels.

3.3 ACCESSORIES SCHEDULE:

A. Refer to Drawings for Quantities and Locations of Accessories.

ITEM	MANUFACTURER	MODEL NO.
42” Grab Bar	Bobrick	B-5806.99 x 42
48” Grab Bar	Bobrick	B-5806.99 x 48
24” x 48” Mirror	Bobrick	B-1658-24x48
Surface Mount Soap Dispenser	Bobrick	B-2111
Recessed Paper Towel Dispenser Enclosure	Bobrick	B3942
Changing Station	Koala Kare	KB200-SS
Mop and Broom Holder	Bobrick	B-223 x 24
Recessed Toilet Tissue/Seat Cover Dispenser/Waste Disposal	Bobrick	B-3574
Recessed Toilet Tissue/Seat Cover Dispenser	Bobrick	B-3474

END OF SECTION

SECTION 10 44 16

FIRE EXTINGUISHERS AND CABINETS

PART 1 GENERAL

1.1 SUMMARY

A. Section Includes: Provide portable fire extinguishers and cabinets and wall brackets for portable fire extinguishers with accessories as required for complete installation.

1.2 SUBMITTALS

A. Product Data: Furnish manufacturer's literature.

1.3 QUALITY ASSURANCE

A. NFPA Compliance: Fabricate and label fire extinguishers to comply with NFPA 10, "Portable Fire Extinguishers."

PART 2 PRODUCTS

2.1 MATERIALS

A. Fire Extinguishers:
   1. Typical: Provide 2A-10BC multi-purpose dry chemical type fire extinguisher.

B. Fire Extinguisher Cabinets: Provide vertical duo style fully recessed mounting unless otherwise indicated, where semi-recessed is indicated or required, provide trim suitable for installation indicated.
   1. Manufacturers:
      a. J.L. Industries/Ambassador Series.
      b. Larsen's Mfg. Co./Architectural Series.
      c. Potter-Roemer/Alta Series.
      d. Or accepted equal.
   2. Cabinet Depth: Provide cabinets designed for space available in walls with fire extinguisher cabinets, and of sufficient depth to house 2A-10BC multi-purpose dry chemical type fire extinguisher.
   3. Trim: Manufacturer's standard edge trim for specified models.
   4. Metal Gages: Provide manufacturer's standard gages for cabinets specified.
      a. Surface Mounted Cabinets: Minimum 18 gage typical, 20 gage at back.
   5. Construction: Mitered and welded one-piece tubular door frames; weld joints and grind smooth; manufacturer's standard steel box with white baked enamel interior finish and primed exterior finish.
      a. Steel Doors and Trim: Manufacturer's standard, prime coat finished.
      b. Door Hardware: Manufacturer’s standard; door to open 180 degrees.

C. Wall Bracket
   1. Larsen Model No. B-2.

PART 3 EXECUTION

3.1 PREPARATION

A. Examine substrates and conditions under which fire extinguisher cabinets are to be installed.

B. Do not proceed with work until unsatisfactory conditions have been corrected.

3.2 INSTALLATION

A. Install cabinets in locations and at mounting height to comply with requirements of governing authorities; prepare recesses in walls as required.

B. Securely fasten to structure, square and plumb, in accordance with manufacturer's instructions.
   1. Wherever exact location of units is not shown, locate as directed by Architect.

C. Install appropriate fire extinguisher in each cabinet.

3.3 IDENTIFICATION

A. After installation and finishing is completed, silk screen or apply decal letters spelling "FIRE EXTINGUISHER" as applicable.

B. Letter size, style and location as selected by Architect.

END OF SECTION

SECTION 11 40 00

FOODSERVICE EQUIPMENT

PART 1 - GENERAL

1.1 DESCRIPTION:

A. Work includes, but is not limited to:

1. Assembly and setting in place of the equipment.

1.2 LAWS AND ORDINANCES

A. Certify that all work and materials comply with Federal, State and Local laws, ordinances and regulations and is confirmed by the local inspector having jurisdiction.

B. Work and materials must be in full accord and when appropriate, shall be listed with the following agencies:

1. Tehama County Health Department
2. National Sanitation Foundation (N.S.F.)
3. Underwriters Laboratories (U.L.) or ETL equivalent
4. A.G.A.
5. N.F.P.A. – latest edition, for exhaust system

1.3 QUALITY ASSURANCE

A. Qualifications

1. Foodservice Equipment Contractor (FSEC) and its sub-contractors to have at least 5 years experience in this type of work. Upon request provide at least three references for jobs of similar size and content.
2. Commercially manufactured equipment is not acceptable unless evidence furnished that similar equipment has been operating successfully in a minimum of three (3) installations (excluding testing laboratories, field-testing or prototypes) for at least one (1) year.
3. Commercially manufactured equipment will be reviewed based on submittal data provided on manufacturer's literature and/or manufacturer's shop drawings for prime alternate or substituted items. Failure of the equipment to meet the capacity, operation, size, utility and production as submitted will result in the rejection of the equipment regardless of disclaimers.

B. Requirements of Regulatory Agencies:

1. NSF Compliance: All equipment subject to NSF approval shall be so labeled, or shall be constructed in accordance with applicable published NSF standards.
2. Refrigerating Equipment: Conform to all applicable ASHRAE Standards. Evaporators NSF approved; electrical components UL (or ETL) approved.

3. Electrical Equipment: Equipment shall carry UL (or ETL) approval and comply with applicable standards of the National Electric Code. Where specified, items shall be UL approved as a unit; if not, specified component electrical parts shall be approved separately. Where applicable, equipment shall comply with NEMA and NBFU standards. Where local regulations permit, a certified test report by an approved nationally recognized independent testing organization establishing proof of conformance to the standards, including test methods of UL, will be considered in lieu of UL label.
4. Civil Authorities: Comply with all ordinances, codes and regulations of civil authorities having jurisdiction at Job Site.
5. Sheet Metal Fabrication: Comply with NFPA standard No. 51: “Welding and Cutting”; and applicable NSF standards.
6. ADA Compliance: Installation and construction of equipment and furnishings to comply with the American Disabilities Act as described in the Department of Justice Register Volume 56, No. 144.
7. Seismic Installation: Verify requirements per OSHPD compliant anchoring, restraining and seismic attachments.

1.4 GUARANTEE AND WARRANTY

A. All equipment shall be fully guaranteed against defects in workmanship and material for one (1) year after Owner’s final acceptance. All repairs and replacements shall be made without charge to the Owner. Guarantee period shall commence with the first usage of the equipment for the intended purpose after final acceptance. Also see additional guarantee required for refrigeration equipment.

1.5 EQUIPMENT ACCESS

A. Verify all building conditions and coordinate proper access of large equipment to the building. Any specific items needed for the movement of large, heavy or bulky equipment is the full responsibility of the Contractor.

1.6 SUBMITTALS

A. Shop Drawings:

1. Shop drawing of all custom fabricated equipment shall be submitted at ¾ inch scale. All custom fabrication shall have dimensions, fabrication, materials, thickness, and details of construction, installation and method of field joint. Shop details indicate reinforcements, methods of anchorage and quality of finishing.
2. Verify all field dimensions and incorporate them into shop details.

B. Rough-in Drawings: Rough-in drawings shall be submitted and show every piece of equipment, all dimensions for rough-in points for electrical, plumbing, steam, exhaust, gas, refrigeration, beverage conduits, as well as concrete curbs, sleeves, supports and any core drilling required. Check and confirm that all equipment requirements have been shown in contract documents, included in rough-in drawings and coordinated with specified, alternate and/or substituted equipment being provided.

C. Equipment Brochures: Assemble and bind Equipment Brochure books as part of submittal. All equipment cut sheets shall clearly show all specified accessories, utility requirements and any other pertinent information.

1.7 START-UP DEMONSTRATION AND MANUALS:

A. Provide factory-trained engineers for start-up and demonstration of equipment. Demonstration shall be done in two stages: One for operation and the second for maintenance personnel.

B. Return to the job site within 10 days for final adjustment and calibration of equipment.

C. Furnish service parts manuals as well as maintenance manuals.

D. Prepare list of service agencies authorized by the manufacturer to service its equipment. Include the name of the person to contact and a telephone number.

PART 2 - PRODUCTS

2.1 GENERAL REQUIREMENTS OF FABRICATION

A. Fabrication shall conform to general acceptance of the foodservice industry.

B. Fabrication shall meet or exceed National Sanitation Foundation standards including the latest editions and revisions.

2.2 MATERIALS

A. Stainless Steel (S/S): Stainless steel shall be of U.S. Standard-gauges as indicated, but not less than 18-gauge or as noted, Type 304 with No. 4 finish.

B. Galvanized Steel: Galvanized steel shall be of 14-gauge and shall be electro galvanized. Galvanized steel shall be used in non-exposed areas, areas, which have no contact with food or food serving items and in framework, when used in framework, galvanized steel shall be, welded construction.

C. Laminated Plastic (L/P):

1. Shall be Formica, Parkwood, LamiArt, or approved equal.
2. Shall be veneered with approved waterproof and heatproof cement. Rubber base adhesives are not acceptable.
3. Shall be applied directly over ¾-inch plywood.
4. Exposed faces and edges shall be faced with 1/16-inch thick material. Corresponding backs shall be covered with approved backing and balancing sheet material.

D. Sealants and Adhesives: Refer to “Sustainable Design Requirements” for VOC limits for products used inside and applied on-site.

2.3 METAL TOP CONSTRUCTION

A. Metal tops shall be one-piece 14-gauge welded construction, including field joints. Secure to a full perimeter galvanized steel channel frame cross-braced not farther than 30 inches on center. Fasten top with stud bolts or tack welds. All exposed leading top edges to have “highlighted” #8 finish.

2.4 ENCLOSED CABINET BASES

A. Bases shall be fabricated from not less than 18-gauge steel reinforced by forming the metal ends and shelves. Partitions shall be all of stainless steel. The ends and vertical partitions may be of single wall construction, with a 2-inch face, all partitions and sides shall be welded in the intersection and flush with the bottom.

B. Unexposed backs and structural members may be constructed of galvanized steel.

C. Intermediate shelves shall be removable, except the bottom shelf when the cabinet is on legs. When the cabinet is on a masonry base, the bottom shelf shall be removable to allow access for cleaning.

2.5 LEGS AND CROSS RAILS

A. Legs and cross railings shall be 1-5/8-inch, 16-gauge stainless steel tubing. All cross rails shall be continuously welded, grounded and polished. Tack welds or other methods of connection are not acceptable. Bottoms of legs shall be wedged inward and fitted with a stainless steel bullet type foot with not less than 2-inch adjustment. Freestanding legs shall be pegged to floor with ¼-inch stainless steel rod.

B. Stainless steel gusset shall be not less than 3-inch diameter at top and 3-3/4-inch long. Outer shell 16-gauge stainless steel reinforced with 12-gauge mild steel inserts welded interior shell. Gusset shall be large enough to accommodate 1-5/8 inch tub with provision for Allen screw fastener.

C. Low counter leg shall be constructed of stainless steel exterior of 5-3/4 inch minimum height or 7 inch maximum height with 3-1/2 inch square plate with four countersunk holes, welded to the top for fastening.

D. Adjustable foot shall be constructed of stainless steel 1-1/2 inch diameter tapered at the bottom to 1-inch diameter, fitted with treaded cold rolled rod for minimum 1-1/2 inch by ¾-inch threaded bushing plug welded to legs.

E. When legs are fastened to equipment, the following methods should be used.

1. Sinks: Reinforced with bushings and set screws.
2. Metal Top Table or Dishtable: Welded to galvanized steel frame of 14-gauge or more and secure to the top with screws through slotted holes.
3. Wood or Composition Top: A welded stainless steel channel of not less than 14-gauge, secured to the top with screws through slotted holes.

2.6 SHELVES

A. When shelves are part of the fixture, the following shall take place.

1. Open base type shelf shall be notched around the leg and continuously welded to the leg.

2. Cabinet base type shelf shall be turned up on the back side a minimum of ¼ inch radius and further slightly to insure a tight fit to enclosure panels.

B. Wall shelves shall be one-piece 16-gauge welded construction, including field joints. Secure walls with 14-gauge S/S brackets at 36-inch on-center maximum. All exposed leading edges to have "highlighted" #8 finish.

C. Over-shelves shall be one-piece 16-gauge welded construction, including field joints. Secure to 1-inch tubular supports at 60-inch on-center maximum attached to counter tops. All exposed leading edges to have "highlighted" #8 finish.

2.7 SINKS

A. When multiple compartments are part of the design, they shall be continuous on the exterior without applied facing strips or panels. Bottoms of each compartment shall be creased such as to ensure complete drainage to waste opening.

B. Partitions between compartments shall be double thickness continuous and welded.

C. Where sink bowls are exposed, the exterior shall be polished to a number 4 finish.

D. Fabricator shall provide drains, wastes and faucets as indicated on drawings, or itemized specifications

2.8 OTHER FABRICATED COMPONENTS

A. Casters:

1. Shall be heavy-duty type, ball bearing, solid or disc wheel with non-marking greaseproof rubber, neoprene or polyurethane tire.
2. Wheel shall be 5-inch diameter, minimum width of tread 1-1/2-inch, with a minimum capacity per caster of 250 pounds.
3. Solid material wheels shall be provided with stainless steel rotating wheel guards.
4. Shall be sanitary, have sealed wheel and swivel bearings and polished plate finish

B. Doors:

1. Metal doors shall be double cased stainless steel. Other pans shall be 18-gauge stainless steel with corners welded, ground smooth, and polished. Inner pan shall be 20-gauge stainless steel fitted tightly into outer pan with a sound deadening material such as Celotex or Styrofoam used as a core. The two pans shall be tack welded together and joints solder filled. Doors shall finish approximately ¾-inch thick and be fitted with flush recessed type stainless steel door pulls.
2. Hinged doors shall be mounted on heavy-duty N.S.F. approved hinges, or as noted on plans or specifications.

C. Hardware:

1. Shall be solid, heavy-duty type.
2. Door hardware shall be locking type, keyed and master keyed.
3. Shall be identified with manufacturer's name and number so that broken or worn parts may be replaced.
4. Submit samples for approval, when requested.

5. Pulls shall be Component Hardware or equal.

D. Drawer Assemblies:

1. Assemblies shall consist of removable drawer body mounted in a ball bearing slide assembly and padlock assembly.
2. Slide assembly consists of one pair of roller bearing extensions slides with side and back enclosure panels, front spacer angle, two drawer carrier angles secured to slides and stainless steel front.
3. Slides shall be 250-pound capacity made by Component Hardware Co., or equal.
4. Drawer bodies for general storage shall be 20-inch by 20-inch with Royalite containers.
5. Drawers intended to hold food products shall be removable type with 12-inch by 20-inch stainless steel assembly.
6. Drawer fronts are double cased ¾-inch thick, with 18-gauge stainless steel welded and polished front pan. Steel back pan is tightly fitted and tack welded. Sound deaden with rigid insulation.
7. All drawers shall be provided with replaceable soft neoprene bumpers or, for refrigerated drawers, a full perimeter soft gasket.

2.9 FABRICATED WORKMANSHIP

A. Items of specially fabricated equipment shall be fabricated by an acceptable manufacturer, which is N.S.F. approved and fabricated in an approved manner to the complete satisfaction of the Owner.

1. Welding and Soldering:
   a. Materials 18-gauge or heavier shall be welded.
   b. Seams and joints shall be shop welded or soldered as the nature of the material may require.
   c. Welds shall be ground smooth and polished to match original finish.
   d. Where galvanizing has been burned off, the weld shall be cleaned and touched up with high-grade aluminum paint.

B. Fasteners and Joints:

1. The following will not be accepted:
   a. Exposed screw or bolt heads.
   b. Rivets.
   c. Butt joints made by riveting straps under seams and then filled with solder.

C. Rolled Edges: Rolled edges shall be as detailed, with corners bull nose, ground and polished.

D. Coved Corners: All stainless steel foodservice equipment shall have ½-inch or larger radius coves in all horizontal and vertical corners and intersections per N.S.F. standards.

E. Closures: Where ends of fixtures, splashback, shelves, etc. are open, fill by forming the metal, or weld sections, if necessary, to close entire opening flush to walls or adjoining fixtures.

2.10 OPERATION REQUIREMENTS

A. Insure quiet operation of foodservice and related equipment.

B. Insure the bumper gaskets stop and any other needed protection is installed on all fabricated equipment as needed.

2.11 EXHAUST HOODS

A. All stainless steel construction. See plans for size and location of ducts.

B. Provide stainless steel closure panels to finished ceiling, adjacent walls and spaces between hoods.

C. Light fixtures are to be incandescent unless otherwise specified in the itemized section.

D. Bottom of hood to be mounted at 80-inches above finished floor minimum, 84-inches above finished floor maximum.

E. All hood alternate manufacturers submitted must meet Health Department requirements at the time of submittal.

2.12 FIRE PROTECTION SYSTEM

A. The fire protection system shall conform to NFPA 17A latest edition.

B. Provide all surface appliance, hood and duct protection nozzles.

C. All exposed piping to be chrome plated or sleeved. Run unexposed wherever possible.

D. Manual pull station, location as shown on drawings

E. Assembly shall contain four (4) sets of normally open/closed contact points.

F. Provide mechanical fire-fuel gas shut off valve for equipment below hoods. Verify size with Plumbing Division.

G. Upon completion the system must be tested in the presence of the enforcing agency.

H. Permit and testing in this Contractors scope.

2.13 ENCLOSURES

A. Provide and install enclosure panels secured or removable for any equipment that houses any equipment with movable parts for access. Also, cover and provide protection for any exposed steam line or condensate line that may be within reach of operating personnel.

2.14 ELECTRICAL WORK - GENERAL REQUIREMENTS

A. Before ordering equipment, confirm with the serving electric utility, all pertinent electrical requirements such as actual voltages available, number of phases and number of wires in the system. Coordinate also with any electrical service provide with other Divisions.

B. Components and assemblies shall bear the U.L., RU or ETL label or be approved by the prevailing authority.

C. Custom fabricated and standard refrigerator units shall be provided with vapor tight receptacles, shatterproof lamps and automatic switches. All wiring shall be concealed when possible.

2.15 INSERT PANS

A. All cut-outs, openings, drawers, or equipment specified or detailed to hold stainless steel insert pans shall be provided with a full compliment of pans as follows:

1. One stainless steel, 20-gauge minimum, solid insert pan for each space, sized per plans, details or specifications.
2. Where pan sizes are not indicated in plans, details or specifications, provide one full size pan for each opening.
3. Provide maximum depth pan to suit application and space.
4. Provide 18-gauge removable stainless steel adapter pars where applicable.

2.16 CORDS AND PLUGS

A. Where cords and plugs are used, they shall comply with National Electrical Manufacturer's Association (N.E.M.A.) requirements.

2.17 WATER FILTERS

A. Provide filters on all icemakers, contractor provided beverage equipment, and steamers.

PART 3 - EXECUTION

3.1 GENERAL INSTALLATION OF EQUIPMENT

A. Supervision: A competent superintendent, representing the Contractor shall be present during progress of the work.

3.2 TRIMMING AND SEALING EQUIPMENT

A. Any space between units to walls, ceilings, floors and adjoining units, not portable, shall be completely sealed against entrance of food particles or vermin by means of trim strips, welding, soldering, or commercial joint material suitable to the nature of the equipment.

B. Sealer, when not exposed to extreme heat, shall be silicone construction sealant in appropriate color.

C. Ends of hollow sections shall be closed.

D. Enclosed fixtures without legs mounted on masonry bases or floor shall be sealed watertight to base or floor.

3.3 CUTTING AND FITTING

A. Cutting and fitting required on the equipment by subcontractors to make their work fit.

B. Should any repairs to foodservice equipment be required due to neglect of other contractors, all extra charges and all anticipated repairs shall be noted in writing before work is performed. In case this Contractor does not follow this procedure, the expense shall be borne by him.

C. No cutting, notching, drilling, or altering of any kind shall be done to the building without first obtaining permission.

3.4 PROTECTION OF EQUIPMENT

A. Be responsible during the progress of the project to protect equipment against theft and/or damage until final acceptance.

B. Prefabricated walk-in boxes, on-site and installed in advance of the rest of the equipment, shall not be used for general storage by other trades and shall be locked before leaving the site. Damage and/or theft resulting from failure to secure boxes will be repaired/replaced at Contractor's expense.

END OF SECTION

SECTION 11 42 16

FOOD PREPARATION SURFACES

PART 1 GENERAL

1.1 WORK INCLUDED

A. Stainless steel counters, splashes and integral sinks.

1.2 REFERENCES

A. ANSI/ASTM A167 - Stainless and Heat resisting Chromium-nickel Steel Plate, Sheet and Strip.

B. ANSI/AWS D1.1 - Structural Welding Code.

C. SMACNA.

1.3 QUALITY ASSURANCE

A. Fabricator: Companies specializing in manufacture of commercial food services equipment with minimum three years experience.

1.4 REGULATORY REQUIREMENTS

A. Fabricated Equipment: Meet requirements of National Sanitation Foundation (NSF).

1.5 SUBMITTALS

A. Product Data.

B. Shop Drawings:
1. Indicate in large detail, with drawings of fabricated equipment showing construction methods, type and gage of metal, hardware and fittings, plan front elevation, and a minimum of one cross-section. Show complicated parts of typical items in cut-away perspective.
2. Indicate configuration, sizes, materials, finishes, locations, plumbing connections and locations.

1.6 OPERATION AND MAINTENANCE DATA

A. Include data on care of finished surfaces.

1.7 DELIVERY, STORAGE, AND HANDLING

A. Store products clear of floor in a manner to prevent warping, twisting, or sagging.

B. Coordinate utility connections with other trades.

1.8 SCHEDULING

A. Coordinate the installation and connection of equipment with other trades such as plumbing, electrical and finishes.

PART 2 PRODUCTS

2.1 ACCEPTABLE FABRICATORS

A. Redding Metal Crafters.

B. Advance Tabco.

C. Or accepted equal.

2.2 EQUIPMENT

A. Provide rough-in hardware, supports and connections, attachment devices, closure trim, and accessories.

2.3 SCHEDULE OF FABRICATIONS (SEE DRAWINGS)

A. Stainless Counter with Sink and Drainboard.

B. Stainless Steel Counter: Type 304, #4 Stainless.

C. Stainless Steel Sink and 18 gauge Stainless Steel Counter.

2.4 MATERIALS

A. Stainless Steel: ANSI/ASTM A167; Type 304 commercial grade, No. 4 finish.

B. Finish Hardware: Manufacturer's standard.

C. Work Surfaces: Stainless steel unless otherwise noted.

D. Fittings.

E. Service Outlet Covers and Escutcheons: Stainless steel.

F. Sealants: Silicone.

2.5 FABRICATION - GENERAL

A. Stainless steel Fastenings and Fittings: Bolts and screws with countersunk flat heads at interior and exterior visible or accessible surfaces. Use concealed fastenings where possible.

B. Form edges smooth. Fabricate sheet material for work surfaces, facings, shelves, and drainboards of straight lengths in one continuous sheet when not over 12 ft. in length.

C. Provide legs of adjustable, stainless steel with feet. Fasten legs to equipment securely and rigidly.

D. Install rubber of nylon button feet or other protective device on bearing surface of any item positioned on a finished surface.

E. Isolate rotating or reciprocating machinery to prevent noise and vibration.

F. Grind welds of stainless steel smooth and flush; polish to match adjacent surfaces.

G. Cut and drill components for service outlets and fixtures.

H. Shop assemble work where possible.

I. Coordinate SS counters with adjacent cabinets.

2.6 FABRICATION - LOAD CARRYING COUNTER SURFACE

A. Reinforce frame support system and surfaces so that surfaces may safely support a load of 200 lbs concentrated on one square foot in any area on surface with no indentation showing on surface and with permanent set not exceeding .005 inches.

2.7 FINISHES

A. Stainless Steel: No. 4 finish.

B. Shop prefinish all components.

C. Bituminous Paint: Sound deaden internal surfaces of metal work.

PART 3 EXECUTION

3.1 INSPECTION

A. Verify service connections, and supports are correct and in required location.

B. Beginning of installation means acceptance of existing conditions.

3.2 INSTALLATION

A. Use anchoring devices appropriate for equipment and expected usage.

B. Insulate to prevent electrolysis between dissimilar metals. Provide sealant to achieve clean joint without crevices.

C. Weld and grind joints in stainless steel work tight, without open seams, where necessary due to limitations of sheet sizes of installation requirements.

D. Sequence installation and erection to ensure mechanical and electrical connections are achieved in an orderly and expeditious manner.

E. Cut, fit, and patch, where necessary. Coordinate work with others.

F. Cut and drill tops, backs, or other elements for service outlets, fixtures, and fittings.

G. Provide cutting and patching of items of this Section required for the installation of services of equipment.

3.3 ADJUSTING AND CLEANING

A. Remove masking or protective covering from stainless steel and other finished surfaces.

B. Wash and clean equipment.

3.4 DEMONSTRATION AND TESTING

A. Test fabrications prior to occupancy.

END OF SECTION

SECTION 11 61 43

STAGE CURTAINS

PART 1 GENERAL

1.1 SUMMARY

A. Includes But Not Limited To:
   1. Furnish and install stage proscenium drapes.

1.2 SUBMITTALS

A. Product Data:
   1. Manufacturer's literature or cut sheet for each element of system.
   2. Typewritten copy of operating instructions.
   3. Color and style selections.

B. Shop Drawings: Indicate length, height location and mounting for each curtain.

C. Samples: Minimum 12" square sample of selected curtain.

D. Quality Assurance Submittals:
   1. Certificates of flameproofing.

PART 2 PRODUCTS

2.1 COMPONENTS

A. Proscenium Drape Track Assembly:
   1. 14 gauge galvanized with large neoprene roller carriers with double row of ball bearings, rubber bumpers, and hand-line supports.
   2. Accessories:
      a. Rearfold attachments.
      b. 6 inch trim chains.
      c. 3/8 inch hand-line and adjustable floor block.
   3. Approved Manufacturer:
      a. #201-B Track and carriers – H & H Specialties, South El Monte, CA.

B. Suspension Material
   1. Use bright steel jack chain as follows:
      a. Trim chain for drapes shall be #10.
      b. Suspend tracks and equipment by #6 chains.

C. Curtains
   1. General:
      a. Fabrics shall be inherently flame resistant or flame-proofed in compliance with State Flameproofing Code or local codes, whichever is most restrictive.
      b. Use no less than ½ widths of material in fabricating curtains.
      c. Minimum fabric weight 25 oz. per lineal yard.
   2. Proscenium Drape:
      a. Provide fullness equal to more than 1-1/2 times opening width.

b. Box pleated at top to 3-1/2 inch heavy-duty jute webbing.
c. Arrange curtain so center of each pleat is provided with a brass grommet and S-hook. Pleats and grommets to be 12 inches on center.
d. Side Hems:
   1) Center overlap edges shall be double faced 27 inches.
   2) Off-platform edges shall lap 2-1/2 inches.
e. Bottom Hems:
   1) 5 inch lap.
   2) Provide on drapes, 4 inch, 8 ounce weights, sewn in separate reinforced pockets at corners and vertical hems.
f. Valance:
   Provide drop to conceal track assembly. Verify length with Architect.
g. Proscenium curtain shall be of width to provide 24 inch minimum on center overlap and at least 24 inch offstage extension.
h. Approved Manufacturer:
   1) “Majestic” Velour by K & M Fabrics.
i. Color: Refer to Finish Schedule legend.

PART 3 EXECUTION

3.1 INSTALLATION

A. Set equipment so platform is properly masked.

END OF SECTION

SECTION 12 24 13

WINDOW SHADES

PART 1 GENERAL

1.1 SECTION INCLUDES

A. Roller shades, manual and motorized operation and accessories.
   1. Motor controls, interfaces, and accessories.

B. Shade fabric
   1. Shade and blackout fabrics.

1.2 REFERENCES

A. ASTM International (ASTM):
   1. ASTM G21 - Standard Practice for Determining Resistance of Synthetic Polymeric Materials to Fungi.

B. National Fire Protection Association (NFPA):
   1. NFPA 70 - National Electrical Code; Most Recent Edition Adopted by Authority Having Jurisdiction, Including All Applicable Amendments and Supplements.
   2. NFPA 701 - Standard Methods of Fire Tests for Flame Propagation of Textiles and Films.

C. Underwriters Laboratories (UL):
   1. UL (GGG) - GREENGUARD Gold Certified Products; Current Edition.
   2. UL 325 - Standard for Door, Drapery, Gate, Louver, and Window Operators and Systems; Current Edition, Including All Revisions.

D. Window Covering Manufacturers Association (WCMA):
   1. WCMA A100.1 - Safety of Window Covering Products; 2018.

1.3 ADMINISTRATIVE REQUIREMENTS

A. Coordination:
   1. Where motorized shades are to be controlled by control systems provided under other sections, coordinate the work with other trades to provide compatible products.
   2. Coordinate the work with other trades to provide rough-in of electrical wiring as required for installation of hardwired motorized shades.

B. Preinstallation Meeting: One week prior to commencing work related to this section. Require attendance of all affected installers.

C. Sequencing:
   1. Do not fabricate shades until field dimensions for each opening have been taken with finished conditions in place. "Hold to" dimensions are not acceptable.
   2. Do not install shades until final surface finishes and painting are complete.

1.4 SUBMITTALS

A. Product Data: Manufacturer's catalog pages and data sheets for products specified including materials, finishes, dimensions, profiles, mountings, and accessories.
   1. Preparation instructions and recommendations.
   2. Styles, material descriptions, dimensions of individual components, profiles, features, finishes, accessories, and operating instructions.
   3. Storage and handling requirements and recommendations.
   4. Mounting details and installation methods.
   5. Manufacturer's Instructions: Include storage, handling, protection, examination, preparation, and installation.
   6. Project Record Documents: Record actual locations of control system components and show interconnecting wiring.
   7. Operation and Maintenance Data: Component list with part numbers, and operation and maintenance instructions.
   8. Motorized Shades: Power requirements. Typical wiring diagrams.

B. Shop Drawings: Plans, elevations, sections, product details, installation details, operational clearances, wiring diagrams and relationship to adjacent work.
   1. Prepare control wiring diagrams based on zones, switching and operational requirements.
   2. Include one-line diagrams, wire counts, coverage patterns, and physical dimensions of each item.
   3. Provide location plan showing all switch and control zones as per the performance requirements of the specifications. All switches, sensors and other control accessories must clearly be shown and called out in a bill of materials.

A. Window Treatment Schedule: For all roller shades. Use same room designations as indicated on the Drawings and include opening sizes and key to typical mounting details.

B. Verification Samples: For each finish product specified, one complete set of shade components, unassembled, demonstrating compliance with specified requirements.
   4. Shadecloth Sample: Mark face of material to indicate interior faces.
      a. Test reports indicating compliance with specified fabric properties.
      b. Verification Samples: 6 inches (150 mm) square, representing actual materials, color and pattern.

C. Maintenance Data: Bill of materials for all components with part numbers. Methods for maintaining roller shades, precautions regarding cleaning materials and methods, instructions for operating hardware and controls.

D. Warranty: Provide manufacturer’s warranty documents as specified in this Section.

1.5 QUALITY ASSURANCE

A. Product Listing Organization Qualifications: An organization recognized by OSHA as a Nationally Recognized Testing Laboratory (NRTL) and acceptable to authorities having jurisdiction.

B. Manufacturer Qualifications: Obtain roller shades system through one source from a single manufacturer with a minimum of ten years experience and minimum of five projects of similar scope and size in manufacturing products comparable to those specified in this section.

C. Installer for Roller Shade System - Qualifications: Installer trained and certified by the manufacturer with a minimum of ten years experience in installing products comparable to those specified in this section.

D. Product Listing Organization Qualifications: Organization recognized by OSHA as a Nationally Recognized Testing Laboratory (NRTL) and acceptable to authorities having jurisdiction.

E. Fire-Test-Response Characteristics: Passes NFPA 701 small and large-scale vertical burn. Materials tested shall be identical to products proposed for use.

F. Electrical Components: NFPA Article 100 listed and labeled by either UL or ETL or other testing agency acceptable to authorities having jurisdiction, marked for intended use, and tested as a system. Individual testing of components will not be acceptable in lieu of system testing.

G. Requirements for Electronic Hardware, Controls, and Switches: Roller shade hardware, shade fabric, and all related controls shall be furnished and installed as a complete two-way communicating system and assembly.

H. ShadeCloth Anti-Microbial Characteristics: 'No Growth' per ASTM G 21 results for fungi ATCC9642, ATCC9644, ATCC9645.

I. Turn-Key Single-Source Responsibility for Wiring Motorized Interior Roller Shades: To control the responsibility for performance of motorized roller shade systems, assign the design, engineering, and installation of motorized roller shade systems, motors, controls, and low voltage electrical control wiring specified in this Section to a single manufacturer and their authorized installer/dealer. The Architect will not produce a set of electrical drawings for the installation of control wiring for the motors, or motor controllers of the motorized roller shades. Power wiring (line voltage), shall be provided by the roller shade installer/dealer, in accordance with the requirements provided by the manufacturer. Coordinate the following with the roller shade installer/dealer:
   1. Contractor shall provide power panels and circuits of sufficient size to accommodate roller shade manufacturer's requirements, as indicated on the mechanical and electrical drawings.
   2. Contractor shall coordinate with requirements of roller shade installer/dealer, before inaccessible areas are constructed.
   3. Roller shade installer/dealer shall run line voltage as dedicated home runs (of sufficient quantity, in sufficient capacity as required) terminating in junction boxes in locations designated by roller shade dealer.
   4. Roller shade installer/dealer shall provide and run all line voltage (from the terminating points) to the motor controllers, wire all roller shade motors to the motor controllers, and provide and run low voltage control wiring from motor controllers to switch/ control locations designated by the Architect. All above-ceiling and concealed wiring shall be plenum-rated, or installed in conduit, as required by the electrical code having jurisdiction.
   5. Contractor shall provide conduit with pull wire in all areas, which might not be accessible to roller shade contractor due to building design, equipment location or schedule.

1.6 DELIVERY, STORAGE, AND HANDLING

A. Deliver in factory-labeled packages, marked with manufacturer and product name, fire-test-response characteristics, and location of installation using same room designations indicated on Drawings and in Window Treatment Schedule.

B. Store and handle products per manufacturer's recommendations.

1.7 PROJECT CONDITIONS

A. Environmental Limitations: Install roller shades after finish work including painting is complete and ambient temperature and humidity conditions are maintained at the levels indicated for Project when occupied for its intended use.

B. Power and control wiring shall be complete.

1.8 WARRANTY

A. Roller Shade Hardware and Chain Warranty: Manufacturer's standard non-depreciating warranty for interior shading.
   1. Shade Hardware:
      a. 25 years.
   2. Standard Shadecloth: Manufacturer's standard twenty-five year warranty.
   3. Roller Shade Motors, Motor Control Systems, and Accessories: Manufacturer's standard non-depreciating five year warranty.
   4. Roller Shade Installation: One year from date of Substantial Completion, not including scaffolding, lifts or other means to reach inaccessible areas, which are deemed owners responsibility.

PART 2 PRODUCTS

2.1 MANUFACTURERS

A. Mecho

B. Draper

C. Or Accepted Equal

2.2 ROLLER SHADES, OPERATION AND ACCESSORIES

A. Basis of Design: UrbanShade. As manufactured by MechoShade Systems LLC. Fabric window shade system complete with mounting brackets, roller tubes, hembars, hardware, and accessories.
   1. Shade Type:
      a. Double Roller. Motorized, with dry contact closure control.
      b. Double Roller. Manual
   2. Drop Position: Regular. Fabric falls off roller tube, close to glass
   3. Mounting: Recess mounted in ceiling pocket.
   4. Size: As indicated on drawings.
   5. Fabric: As indicated under Shade Fabric article.
   6. Brackets and Mounting Hardware: Stamped steel. As recommended by manufacturer for mounting indicated accommodating shade fabric roll-up size and weight.
      a. Double Roller Brackets: Configured for light-filtering and room-darkening shades in one opening.
         1) Light-Filtering Fabric: Room-side of opening.

2) Room-Darkening Fabric: Glass-side of opening.

7. Roller Tubes: Extruded aluminum. Capable of being removed and reinstalled without affecting roller shade limit adjustments.
   a. Size: As recommended by manufacturer; for installation conditions, span, and weight of shades.
   b. Fabric Attachment: Extruded channel in tube accepts vinyl spline welded to fabric edge.
      1) Shade Band: Removable and replaceable without removing roller tube from brackets or inserting spline from the side of the roller tube.
8. Hembars: Maintains bottom of shade straight and flat.
   a. Style: Full wrap fabric covered bottom bar, flat profile with heat sealed closed ends.
   b. Room-Darkening Shades: Slotted bottom bar with wool-pile light seal.
9. Operation:
   a. Motorized Operation at all windows in the Auditorium
      1) Provide manufacturer’s standard motorized control system
   b. Manual Operation at all other exterior windows
      1) Clutch Operator: Manufacturer's standard material and design integrated with bracket/brake assembly.
      2) Brake Assembly: Mounted on a low-friction plastic hub with wrapped spring clutch.
         (a) Brake must withstand minimum pull force of 25 lbs (12 kg) in stopped position.
      3) Clutch/Brake Mounting: On support brackets, independent of roller tube components.
   c. Drive Chain: Continuous loop beaded ball chain. Upper and lower limit stops.
      1) Breaking Force: 45 lbf (200 N) minimum.
      2) Chain Retainer: Chain tensioning device complying with WCMA A100.1.
   d. Lift Assist Mechanism: Provide manufacturer's standard device, contained in the idler end of roller tube, when hanging weights exceed roller tube weight limits.
10. Accessories:
   a. Fascia: Removable extruded aluminum. Size as required to conceal shade mounting. Attachable to brackets without exposed fasteners.
      1) Finish: Baked enamel.
         (a) Color: As selected by Architect.
      2) Can be installed across two or more shade bands in one piece.
      3) Profile: Square.
      4) Configuration: Captured and continuous, as indicated on drawings.
   b. Ceiling Pockets: Manual Premanufactured metal shade pocket with removable closure panel, for recess mounting in acoustical tile or drywall ceilings; size and configuration as indicated on drawings.

2.3 MOTOR CONTROLS, INTERFACES, AND ACCESSORIES

A. Provide required equipment as necessary for a complete operating system providing the control intent specified. Provide components and connections necessary to interface with other systems as indicated.

B. Low-Voltage Wall Controls; IQ Switch:
   1. Momentary dry contact switch enables manual local control or network control of any individual shade motor or shade group/sub-group.
   2. Control Functions:
      a. Open: Automatically open controlled shades to fully open position when button is pressed.
      b. Close: Automatically close controlled shades to fully closed position when button is pressed.
      c. Presets: For selection of predetermined shade positions.
      d. Dual Stations: For individual control of two shades/groups.
   3. Finish: White.
   4. Double Station: 10-button (open, close, and three intermediate stop positions for each of two shades/groups).

2.4 ROLLER SHADE FABRICATION

A. Field measure finished openings prior to ordering or fabrication.

B. Dimensional Tolerances: Fabricate shades to fit openings within specified tolerances.
   1. Vertical Dimensions: Fill openings from head to sill with 1/2 inch space between bottom bar and window stool.
   2. Horizontal Dimensions: Outside mounting.
      a. Cover window frames, trim, and casings completely.
      b. Extend shades beyond jambs on each side: 3.5 inches

C. Openings Requiring Continuous Multiple Shade Units with Separate Rollers: Locate roller joints at window mullion centers; butt rollers end-to-end.

2.5 SHADE FABRIC

A. Basis of Design:
   1. Solar Shadecloths: Refer to Interior Finish Schedule Legend
   2. Blackout Shadecloths:
      a. Fabric: Blackout: Midnite Blackout: 0100 series. Opaque. Acrylic backing, PVC-free, white color reverse side (for exterior).
      b. Color: Selected from manufacturer's standard colors.
   3. Fabric Properties: Non-flammable, color-fast, impervious to heat and moisture, and able to retain its shape under normal operation.
      a. Shade Type: Light filtering shades.
      b. Shade Type: Room darkening shades.
      c. Material Composition: PVC coated polyester yarns.
      d. Material Composition: Polyester with acrylic backing.
   4. Material Certificates and Product Disclosures:
      a. Low-Emitting Material Certification: Greenguard Gold certified and listed in UL (GGG).
   5. Performance Requirements:
      a. Flammability per NFPA 701: Pass. Large or small scale test.
      b. Fungal Resistance: No growth when tested per ASTM G21.
   6. Color: As selected by Architect from manufacturer’s full range of colors.
   7. Fabrication:
      a. Fabric Orientation: As required, provide Railroaded, fabric is turned 90 degrees off the roll.

b. Battens: Manufacturer's standard material, full width of shade, and enclosed in welded shade fabric pocket; locate as indicated on drawings.

PART 3 EXECUTION

3.1 EXAMINATION

A. Do not begin installation until substrates have been properly prepared.

B. If substrate preparation is the responsibility of another installer, notify Architect of unsatisfactory preparation before proceeding.

C. Start of installation shall be considered acceptance of substrates.

3.2 PREPARATION

A. Clean surfaces thoroughly prior to installation.

B. Prepare surfaces using methods recommended by manufacturer for achieving best result for substrate under the project conditions.

C. Coordinate with window installation and placement of concealed blocking to support shades.

3.3 INSTALLATION

A. Install shades level, plumb, square, and true per manufacturer's instructions and approved shop drawings. Locate so shade band is at least 2 inches (51 mm) from interior face of glass. Allow proper clearances for window operation hardware. Use mounting devices as indicated.

B. Replace shades exceeding specified tolerances at no extra cost to Owner.

C. Adjust and balance roller shades to operate smoothly, easily, safely, and free from binding or malfunction throughout entire operational range. Adjust level, projection, and shade centering from mounting bracket. Verify there is no telescoping of shade fabric.

D. Clean roller shade surfaces after installation, per manufacturer's written instructions.

E. Demonstrate operation and maintenance of window shade system to Owner's personnel.

F. Manufacturer's authorized personnel are to train Owner's personnel on operation and maintenance of system.
   1. Use operation and maintenance manual as a reference, supplemented with additional training materials as required.

3.4 SYSTEM STARTUP

A. Motorized Shade System: Provide services of a manufacturer's authorized representative to perform system startup.

B. Turn-Key Single-Source Responsibility for Motorized Interior Roller Shades: Design, engineering, and installation of motorized roller shade systems, motors, controls, and low

voltage electrical control wiring specified is to be performed by a single manufacturer and their authorized installer/dealer.

1. The Architect will not provide a set of electrical drawings for installation of control wiring for motors, or motor controllers of motorized roller shades.
2. Power wiring (line voltage), to be provided by roller shade installer/dealer, per requirements provided by manufacturer. Coordinate following with roller shade installer/dealer:
3. Contractor To Provide the Following:
   a. Power Panels and Circuits: Size to accommodate roller shade manufacturer's requirements, as indicated on mechanical and electrical drawings.
   b. Coordinate with requirements of roller shade installer/dealer, before inaccessible areas are constructed.
   c. Line voltage as dedicated home runs, of sufficient quantity, and capacity as required. Terminate in junction boxes at locations designated by roller shade installer/dealer.
   d. Run line voltage from terminating points to motor controllers. Wire roller shade motors to motor controllers. Run low voltage control wiring from motor controllers to switch/control locations designated by Architect.
      1) Above-ceiling and concealed wiring to be plenum-rated, or in conduit, as required by the electrical code having jurisdiction.
   e. Use conduit with pull wire in areas, not accessible to roller shade contractor due to building design, equipment location or schedule.

3.5 PROTECTION AND CLEANING

A. Protect installed products until completion of project.

B. Touch-up, repair or replace damaged products before Substantial Completion.
   1. Clean soiled shades and exposed components as recommended by manufacturer.
   2. Replace shades that cannot be cleaned to "like new" condition.

END OF SECTION

SECTION 12 48 19

ENTRANCE FLOOR GRATINGS

PART 1 GENERAL

1.1 SUMMARY

A. This section includes the following types of Flooring Systems:
   1. Entrance Matting and Framing Assemblies

1.2 REFERENCES

A. American Society for Testing and Materials (ASTM)

B. National Fire Protection Agency (NFPA)

C. The Aluminum Association, Inc.

D. The National Floor Safety Institute (NFSI)

E. ADA Accessibility Guidelines (CFR Part 36 Appendix A)

1.3 SUBMITTALS

A. Product Data: For each type of entrance matting and frame, include:
   1. Product detail drawing including product cross-section and technical information.
   2. Manufacturer's product specification, installation instructions.
   3. Manufacturer's maintenance and cleaning instructions.
   4. Shop drawings showing traffic direction, dimensions, sectioning, and framing.

B. Samples: Product samples representing the assembled grating and frame assembly.

1.4 QUALITY ASSURANCE

A. Flammability: Critical radiant flux 0.45 watts/m2 or greater, in accordance with ASTM E648. Life Safety Code® NFPA 101, Class 1 Interior Floor Finish Testing and Classification.

B. Slip Resistance: Coefficient of friction 0.60 or greater, in accordance with ASTM D2047 tested in wet conditions.

C. Rolling Load: No deformation with 500 lb/wheel and minimum of 2500 passes. Load applied to a 5" diameter, 2" wide solid polyurethane wheel.

D. Single Source: Obtain entrance matting and frames from a single source to ensure dimensional compatibility.

1.5 DELIVERY, STORAGE AND HANDLING

A. Deliver materials in unopened original factory packaging, labeled to identify product and manufacturer. Store in controlled environment. To avoid damage do not stack other material on top of matting or frames.

1.6 PROJECT CONDITIONS

A. Coordinate installation of recess frame with concrete construction. Install frames to ensure dimensions provided in shop drawings are maintained. Finished recess must be flat and level. Defer frame installation until related interior finish work is in progress.

PART 2 PRODUCTS

2.1 MANUFACTURERS

A. Supply entrance matting and frames as manufactured by the Architectural Products Division of Pawling Corporation, 32 Nelson Hill Road, Wassaic, NY 12592. Other manufacturers must comply with requirements indicated in this specification, products data, and shop drawings.

2.2 MATERIALS

A. Aluminum: ASTM B221, alloy 6063-T5 for extrusions.

B. Stainless Steel: Type 304.

2.3 ENTRANCE GRATING

A. Pawling Corporation model RG-710 Drain-Well® Entrance Grating. Manufactured from type 304 stainless steel V-Wire resistance welded to type 304 stainless steel fin support rails. V-Wire rails shall be .069” x .185” spaced to provide .125” opening to allow for drainage. Support fins shall be .070” x .500” to provide an overall grating height of 5/8”. Support fins are spaced approximately 1” on center. Walking surface is a #3 satin finish.

B. Hold-Downs
   1. Grating shall be mechanically fastened to substrate using hidden stainless steel clip and fastener system. Hold-Downs shall not obstruct the walking surface.

C. Framing
   1. Cast-In-Place: Model RGFA-710, alloy 6063-T5 extruded aluminum recessed framing. Installed frame provides 1/8” exposed perimeter trim and 5/8” deep recess. Frame provides continuous thread-slot for use with hidden hold-downs. Standard in mill finish aluminum. Installer to use self-leveling screed to ensure smooth, flat recess.
   2. Angle Frame: Model RGFS-710, extruded type 304 stainless steel 3/4” x 3/4" angle frame. Installed frame provides 1/8” exposed perimeter trim and 5/8” deep recess. Standard in mill finish. Installer to use self-leveling screed to ensure smooth, flat recess.

PART 3 EXECUTION

3.1 EXAMINATION

A. Examine substrate and area where matting is to be installed. Do not proceed until unsatisfactory conditions have been corrected.

3.2 INSTALLATION

A. Install products in accordance with manufacturer’s installation instructions.

B. Recessed opening must be flat, 1/8” in 10’-0”, and free of debris before matting is installed.

3.3 PROTECTION

A. Protect installed frames from damage by using temporary plywood filler in recess opening. Cover exposed frames with similar materials until construction traffic is minimized. Install matting when project is near substantial completion and no further wheeled traffic or major construction operations will affect matting.

3.4 CLEANING

A. Include matting and recess in a routine cleaning and maintenance program. Regular cleaning will maximize functionality, appearance, and life span of the product. Refer to manufacturer's cleaning and maintenance instructions for additional information.

END OF SECTION

SECTION 13 28 00

HAZARDOUS MATERIALS ABATEMENT

1.1 SUMMARY

A. The existing building includes known hazardous materials. Refer to Appendix 1 for Focused Asbestos and Lead-Based Paint NESHAP Survey Report by Guzi West Inspection & Consulting.

B. The contractor shall remove and dispose of all hazardous material within the areas of demolition as indicated on the drawings. Refer to Appendix 1 for information regarding locations and types of hazardous materials and the requirements for abating these materials.

END OF SECTION

SECTION 13 34 19

METAL SHADE STRUCTURE SYSTEM

PART 1 GENERAL

1.1 WORK INCLUDED

A. Preparation of plans and structural calculations.

B. Fabrication of system.

C. Concrete footings and anchor bolts per section 03 30 00.

D. Installation of system.

1.2 REFERENCES

A. The design of the structures shall be in accordance with all local building codes as adopted by the municipality having jurisdiction over the project.

B. All light gauge cold formed structural member and panels shall be designed in accordance with the latest version, with addendums, of the AISI “Specification for the design of Cold-Formed Steel Structural Members”.
   1. Welding of the light gauge cold-formed structural members shall be in accordance with the latest version of the “Structural Welding Code – Sheet Steel” (ANSI/AWS D1.3)

C. All structural steel sections shall be designed in accordance with the latest version, with addendums, of the AISC “Specifications for the Design, Fabrication and Erection of the Structural Steel for Buildings”.

1.3 QUALITY ASSURANCE

A. Experience
   1. The manufacturer must have been in the business of supplying metal buildings in the state of California for at least 5 years.

B. Fabrication
   1. All steel framing fabrication shall be done by a approved fabricator, certified, by an independent agency, for the type of fabrication required.

C. Welding
   1. Welders holding a valid certification for the type of welding required shall perform all steel welding.

1.4 SUBMITTALS

A. Within 21 calendar days of the signing of the contract, the contractor shall submit plans, details and structural calculations suitable for submission to the Building Department. Plans shall include foundation design. All plans and calculations shall bear an original stamp by a structural engineer licensed in California. This submittal will be reviewed for compliance with

the contract documents.

B. Subsequent Submittals: After receiving of Submittal No. 1 bearing corrections required by the architect, City or Engineer, the contractor shall revise the plans accordingly and resubmit. The corrected submittal shall be returned to the County.

C. When approved plans are returned by the County will return them to the contractor for manufacturing and installation.

1.5 DESCRIPTION OF THE CARPORT SYSTEM

A. The metal shade structure system shall consist of pre-manufactured roof structures with widths, lengths and height as shown on drawings. The structures shall be designed, supplied and installed by a single entity. The system shall include concrete foundations as required by the load criteria in CBC Chapter 16.

PART 2 PRODUCTS

2.1 ACCEPTABLE MANUFACTURERS

A. Basis of Design: Baja Carports Solar Support System, Full Cantilever Tee (FC-TEE)

B. National Carport Industries, Sherman, TX.

C. American Buildings Company

D. Park Planet

E. Or accepted equal.

2.2 BUILDING CONSTRUCTION STANDARDS

A. California Building Codes.

B. Roof Snow Load – 36 lbs. per sq. ft., I = 1.2, Ct = 1.0

C. Seismic Force Resisting System = as required.

D. California Code of Regulations – Title 24, Part 2.

2.3 MATERIALS

A. Materials shall conform to the minimum requirements of the standard noted below:
   1. Steel Roof Panel - Shall be HR-36 or Alta-Rib, as manufactured by AEP Span from Zincalume coated steel conforming to ASTM A792, ASTM A653 or ASTM A611, with a minimum yield strength of 80 ksi, or equal. Roof panels to be Factory Pre-Painted.
   2. Light Gauge Steel Beams and Columns - Shall conform to ASTM A653, ASTM A607, or A611 with a minimum yield strength of 55 ksi, or equal.
   3. Structural Steel Members - Shall conform to ASTM A36 with a minimum yield strength of 36 kis, or equal.
   4. Concrete shall be done in accordance with the latest edition of ACI 318 “Specifications for Structural Concrete for Buildings”. F’c shall be 2500 psi at 28 days. Reinforcing shall be new billet steel conforming to ASTM A615, grade 40.

2.4 ASSEMBLY

A. All components shall be assembled per approved drawings including all related accessories necessary to provide a complete system.

PART 3 EXECUTION

3.1 PLANT FABRICATION

A. No work shall begin until final approval of the construction documents is obtained from the County.

3.2 TRANSPORTATION

A. Obtain all necessary permits to transport the system to the site.

B. Protect system during shipping.

C. Repair any damage due to shipping

3.3 INSPECTION

A. Structure installer shall coordinate site general and special inspections with the contractor.

3.4 SITE INSTALLATION

A. The same company that produced the design and supplied material for the carport shall do installation of the structures. Location of the structures shall be defined by the site plan.

B. Install concrete foundations per Section 03 30 00, and set modules on sill plates.

C. Plumb and level units

D. Anchor units to foundation per approved drawings.

E. Install all trim and flashing necessary to complete the system.

F. Coordinate final system connections by others.

END OF SECTION

SECTION 14 42 46

VERTICAL WHEELCHAIR LIFTS

PART 1 GENERAL

1.1 SECTION INCLUDES

A. Vertical Wheelchair Lift.

1.2 SUBMITTALS

A. Product Data: For each type of product indicated. Include rated capacities, dimensions, performances, operations, safety features, controls, and finishes.

B. Shop Drawings: Include plans, elevations, sections, details, and attachments to other work. Include wiring diagrams for power, control and signal systems. Show complete layout of location of equipment, including required clearances and coordination with shaftway.

C. Samples: For each finished product specified, provide two complete sets of color chips representing manufacturer's full range of available colors and patterns.

D. Certificates and Permits: Provide Owner with inspection and acceptance certificates and operating permits, as required by authorities having jurisdiction, for normal, unrestricted use of lifts.

E. Maintenance data.

1.3 QUALITY ASSURANCE

A. Manufacturer Qualifications: Firm with minimum 10 years experience in manufacturing of vertical platform lifts, with evidence of experience with similar installations of type specified.

B. Installer Qualifications: Licensed to install equipment of this scope, with evidence of experience with specified equipment. Installer shall maintain an adequate stock of replacement parts, have qualified people available to ensure fulfillment of maintenance and callback service without unreasonable loss of time in reaching project site.

C. Regulatory Requirements: In addition to requirements of authorities having jurisdiction, comply with ASME A18.1, "Safety Standard for Platform Lifts and Stairway Chairlifts Fittings."

1.4 REGULATORY REQUIREMENTS

A. Provide platform lifts in compliance with:

1. ASME A18.1 - Safety Standard for Platform Lifts and Stairway Chairlifts.

2. ASME A17.1 - Safety Code for Elevators and Escalators.

3. ASME A17.5 - Elevator and Escalator Electrical Equipment.

4. NFPA 70 - National Electric Code

5. 2022 California Building Code, Section 11B-410 Platform Lifts

1.5 DELIVERY, STORAGE, AND HANDLING

A. Store products in manufacturer's unopened packaging until ready for installation.

B. Store components off the ground in a dry covered area, protected from adverse weather conditions.

1.6 PROJECT CONDITIONS

A. Do not use wheelchair lift for hoisting materials or personnel during construction period.

1.7 WARRANTY

A. Warranty: Provide a two-year limited warranty for wheelchair lift materials and workmanship.

B. Extended Warranty: Provide an extended manufacturer's warranty covering the wheelchair lift materials and workmanship for the following additional extended period beyond the initial two-year warranty. Preventive Maintenance Agreement required.

1. Five Years (7 years total).

1.8 MAINTENANCE SERVICE

A. Initial Maintenance Service: Beginning at Substantial Completion, provide twelve (12**)** months' full maintenance by skilled employees of lift Installer. Include quarterly preventive maintenance, repair or replacement of worn or defective components, lubrication, cleaning, and adjusting. Provide parts and supplies same as those used in the manufacture and installation of original equipment.

B. Continuing Maintenance Service: Provide a continuing maintenance proposal from Installer to Owner, in the form of a standard yearly (or other period) maintenance agreement, starting on date initial maintenance service is concluded.

PART 2 PRODUCTS

2.1 MANUFACTURERS

A. Basis of Design: Opal as manufactured by Garaventa Lift.

B. Or accepted equal.

2.2 ENCLOSED VERTICAL WHEELCHAIR LIFT

A. Capacity: 750 lbs. rated capacity.

B. Mast Height:

1. Model GVL-OP-45; 45 inches maximum lifting height.

C. Nominal Clear Platform Dimensions:

1. Standard: 37-1/4 inches by 48 7/8 inches.

D. Platform Configuration:

1. Straight through.

E. Landing Openings:

1. Lower Landing: Door.

2. Upper Landing: Gate.

F. Doors and Gates: Doors and gates shall be self-closing type.

1. Door Height: Flush mount, 80 inches.

2. Gate Height: Flush mount, 42-1/8 inches.

3. Door Construction: Aluminum frame with panels of 16-gauge painted galvanized steel.

4. Power Door/Gate Operator: Automatically opens the door/gate when platform arrives at a landing. Will also open at landing by pressing call button.

G. Lift Components:

1. Machine Tower: aluminum.

2. Base Frame: Structural steel.

3. Platform Side Wall Panels: 42-1/8 inches high. 16-gauge galvanized steel sheet. Aluminum extrusion tubing frame.

4. Enclosure Panels: 16-gauge painted galvanized steel sheet.

H. Enclosure Height Above Upper landing:

1. Enclosure shall extend 42-1/8 inches above the upper landing level

I. Infill Panel Kit: Provide 16-gauge galvanized panels and mounting hardware to cover void between side of enclosure, drive mast and adjacent wall at lower landing and upper landing.

J. Base Mounting and Access to Lift at Lower Landing:

1. Pit Mount: Lift to be mounted in pit with dimensions to meet manufacturers requirements for the platform size specified.

K. Hydraulic Drive:

1. Drive Type: Chain hydraulic.

2. Emergency Operation: Manual device to lower platform and use auxiliary battery power to raise or lower platform.

3. Safety Devices:

a. Slack chain safety device.

b. Shoring device.

4. Travel Speed: 17 fpm (5.2 m/minute).

5. Motor: 3.0 hp (2.2 kW); 24 volts DC.

6. Power Supply:

a. 120 VAC single phase; 60 Hz on a dedicated 15-amp circuit.

b. Powered by building continuous mains converted to 24 VDC and equipped with auxiliary battery backup power system capable of running lift up and down for a minimum of 5 trips with rated load. Required for high use lifts and lifts equipped with a fan and ventilation system.

L. Platform Controls: 24 VDC control circuit with the following features.

1. Direction Control: Illuminated tactile and constant pressure push buttons with dual platform courtesy lights and safety light.

2. Illuminated and audible emergency stop switch shuts off power to lift and activates audio alarm equipped with battery backup.

3. Keyless operation.

4. Emergency Telephone: Platform shall be equipped with ADA compliant auto dialer telephone with a stainless-steel faceplate. Telephone shall operate in the event of power failure. A telephone line shall be supplied to the lift site as specified under Division 16.

5. Arrival Gong and Digital Floor Display.

M. Call Station Controls: 24 VDC control circuit with the following features.

1. Direction Control: Illuminated tactile and constant pressure push buttons with illuminated "In Use" indicator.

2. Keyless operation.

3. Lower and upper call station shall be frame mounted.

N. Safety Devices and Features:

1. Grounded electrical system with upper, lower, and final limit switches.

2. Tamper resistant interlock to electrically monitor that the door is in the closed position and the lock is engaged before lift can move from landing.

O. Finishes

1. Aluminum Extrusions: Electrostatically applied baked powder finish Fine Textured Silver Moon (RAL 7047).

2. Lift Finish: Baked powder coat finish, color as selected by the Architect from manufacturers optional RAL color chart.

PART 3 EXECUTION

3.1 EXAMINATION

A. Do not begin installation until substrates have been properly prepared.

B. Verify shaft and machine space are of correct size and within tolerances.

C. Verify required landings and openings are of correct size and within tolerances.

D. Verify electrical rough-in is at correct location.

E. If substrate preparation is the responsibility of another installer, notify Architect of unsatisfactory preparation before proceeding.

3.2 PREPARATION

A. Clean surfaces thoroughly prior to installation.

B. Prepare surfaces using the methods recommended by the manufacturer for achieving the best result for the substrate under the project conditions.

3.3 INSTALLATION

A. Install lifts in accordance with applicable regulatory requirements including ASME A 17.1, ASME A 18.1 and the manufacturer's instructions.

B. Install lifts in accordance with applicable regulatory requirements including CSA B355, and manufacturer's instructions.

C. Install system components and connect to building utilities.

D. Accommodate equipment in space indicated.

E. Startup equipment in accordance with manufacturer's instructions.

F. Adjust for smooth operation.

3.4 FIELD QUALITY CONTROL

A. Perform tests in compliance with ASME A 17.1 or A18.1 and as required by authorities having jurisdiction.

B. Perform tests in compliance with CSA B355 and required by authorities having jurisdiction.

C. Schedule tests with agencies and Architect, Owner, and Contractor present.

3.5 PROTECTION

A. Protect installed products until completion of project.

B. Touch-up, repair or replace damaged products before Substantial Completion.

END OF SECTION

SECTION 22 00 00

PLUMBING

PART 1 – GENERAL

1.1 INCLUDED

A. This Specification establishes the required standards for all labor, materials, equipment, and workmanship in connection with the furnishing, fabrication, and installation of “Plumbing.” Plumbing work includes, but is not limited to, the following items of work:
   1. A complete system of soil, waste, vent, and sanitary sewer piping and structures, including provisions for mechanical equipment drainage; and connection of same to public sanitary sewers, located as indicated on the Drawings.
   2. Cold water distribution system, complete, from points of contact with site domestic water systems (located approximately as indicated on the Drawings) to all plumbing fixtures, mechanical equipment, building specialties, and Owner supplied equipment scheduled for service on the Drawings.
   3. Hot water distribution system, complete, from serving water heaters and/or points of contact with site domestic hot water, to all plumbing fixtures, mechanical equipment, building specialties, and Owner supplied equipment schedule for service on the Drawings.
   4. All plumbing fixtures and trim as scheduled on the Drawings, inclusive of setting of Fixtures and connections to drainage and water supply systems.
   5. Flashing of all plumbing pipe penetrations through exterior walls, roofs, and foundations. Sheet metal and lead flashings for pipe penetrations through roofs shall be furnished by the Plumbing Contractor and installed by the appropriate Roofing Contractor.
   6. Excavation and backfill as required for the work of this Section in conformity with Earthwork Section of the Specifications.
   7. Rough in and connection of all fixtures and equipment furnished by the Owner and/or Tenant.
   8. Final connection of water and natural gas to equipment furnished under other Sections.
   9. Protection of all piping specified herein and/or shown on the Drawings, from freezing. Buried piping shall be a minimum 12” below the local front line. Piping above grade in unconditioned areas shall be insulated.
   10. Testing and adjusting of all piping systems and equipment herein specified.
   11. Sterilization of domestic water systems.
   12. Pipe wrapping and insulation.

B. The bidding requirements and contract forms, including General Conditions and Supplemental General Conditions, all Division 01 Sections apply to all work herein.

C. Should any work or material not be included in the Drawings or Specifications but it nevertheless necessary for the proper execution of the stated scope therefore for full compliance with codes, laws, rules, and regulations, the Contractor shall understand such work and material is required, and shall perform all such work.

1.2 LICENSES, PERMITS, AND FEES

A. The Contractor shall provide, procure, and pay for all licenses, permits, fees, etc. as required to carry on and complete their work.

1.3 CODES AND STANDARDS

A. All work shall be done in code with all applicable local, state, and federal building safety codes, ordinances, and regulations. Additionally, all work shall conform to the latest editions of the following standards:
   1. National Fire Protection Association.
   2. California Mechanical Code.
   3. California Plumbing Code.
   4. Underwriters Laboratories.
   5. Titles 8, 17, 19, 21, 24 of the California Code of Regulations.
   6. California Electric Code.

B. When the Contract Documents call for materials or construction of a higher standard than is required by the above, the Contract Document requirements shall take precedence over the requirements of the applicable laws, ordinances, rules, or regulations. Nothing in the Contract Documents shall be interpreted as permitting work in violation of said laws, rules, and/or regulations.

C. The Contractor for this work shall furnish, without extra charge, any additional materials and/or labor as may be required for compliance with these laws, rules, and/or regulations though such materials and/or labor are not specially set forth in the Contract Documents.

1.4 LICENSING REQUIREMENTS

A. All plumbing systems shall be installed by a C-36 Plumbing Contractor. Plumbing systems include: waste removal and connection of on-site waste disposal systems; piping, storage tanks, and venting for supply of gases and liquids for any purpose; all gas appliances, flues, and gas connections; water and gas piping from the Owner's side of utility meter to the structure or fixed works, installation of any type of equipment to heat water or fluids to a suitable temperature; and maintenance and replacement of the items described above, including health and safety devices.

B. All hydronic piping systems shall be installed by a C-4 – Boiler, Hot Water Heating and Steam Fitting Contractor.

C. All plumbing and hydronic piping insulation shall be performed by a C-2 – Insulation and Acoustical Contractor.

1.5 SUBMITTALS

A. All fixtures, materials, and equipment equal in quality and utility to these herein mentioned will be accepted. When specific names are used in describing fixtures, materials, and equipment they are mentioned as standards only, but this implies no right on the part of the Contractor to use other fixtures, material, and equipment or methods, unless approved as equal in quality and utility by the Architect.

B. Before any fixtures, materials, or equipment are purchased, the Contractor shall submit to the Architect for approval, a complete list of materials, fixtures, and equipment, giving the manufacturer's names, model numbers, and catalog sheets.

C. The Contractor shall submit for the approval of the Architect, shop drawings of proposed material and equipment that differ from the specified materials and equipment, and of any specified materials and equipment with special conditions and/or arrangements. These drawings shall show necessary modifications of owner, plumbing, electrical, and mechanical work required by the proposed materials and equipment.

D. Submittal lists and drawings shall include identifying marks assigned by the Drawings and Specifications.

E. Review of drawings and other material submitted shall not be construed as complete check or constitute a waiver of the requirements of the Drawings and Specifications, but will indicate that the material submitted is acceptable in quality and utility. This review shall not relieve the Contractor of the responsibility to fit the proposed materials to the spaces provided, and to effect necessary rearrangements or construction of other work.

F. Coordination/Layout Shop Drawings
   1. Prepare complete consolidated layout drawings for all new systems, and for existing systems that are in the same areas. Shop drawings shall be prepared using AutoCAD 2004 or newer and shall be drawn at a minimum ¼" = 1' 0" scale. All drawings shall be fully coordinated with HVAC, Plumbing, Fire Protection, Electrical, Structural, and Architectural work.
   2. Clearly identify and dimension the proposed locations of the principal items of equipment and adequate clearance for all equipment, piping, pumps, valves, and other items. Provide detailed layout of all piping systems showing the proposed routes.
   3. Show the access means for all items requiring access for operations and maintenance.
   4. Submit shop drawings to Architect for approval, prior to fabrication or installation of any work. Do not install equipment or piping until layout drawings have been approved. Any work installed without prior shop drawing approval shall be removed at the Contractor's expense.

1.6 COOPERATION WITH OTHER TRADES

A. Cooperate fully with other trades doing work on the project as may be necessary for the proper completion of the project. Refer to the Structural, Mechanical, and Electrical Drawings for details of the building structure and equipment installation that will tend to overlap, conflict with or require coordination with the work of this Section, and schedule this work accordingly.

B. Any work done without regard for other trades shall be moved, replaced, or redone as required, without extra charges to Owner.

1.7 AS-BUILT DRAWINGS

A. A complete set of Contract Drawings shall be maintained at the work site, and all changes in the work shall be recorded on this set, on a daily basis. The final as-built drawings shall be submitted to the Owner's Representative for approval.

1.8 DRAWINGS

A. The drawings indicate diagrammatically the general layout of the plumbing systems and other related work. Field verification of scaled dimensions taken from the Drawings is required.

B. The Contractor shall review and compare the Architectural, Structural, Plumbing, Mechanical, and Electrical Drawings and all Owner supplied equipment Drawings, and adjust their work to be in conformity with the conditions indicated thereon. Discrepancies between drawings, between drawings and actual field conditions, or between Drawings and Specifications, shall promptly be brought to the attention of the Architect for a determination of the modifications to be effected. In the event that a major modification is required, a Change Order will be prepared.

1.9 VERIFICATION OF EXISTING CONDITIONS AND DEMOLITION

A. Before installation of any new work, verify the location, size, and other conditions at all points of connection to services or other existing piping, and at all locations where new work will cross or pass near existing piping, electrical, or other facilities.

B. Patch, cap, or repair existing works affected by this demolition in concealed spaces within six (6) inches of a live main or branch.

C. Deliver removed material to the Owner as directed by the Architect. Dispose of all other removed material offsite.

D. Information shown relative to existing services is based upon available records and data during preparation of the Drawings, but shall be verified. Make reasonable deviations found necessary to conform to actual locations and conditions, without extra charge.

E. The data given herein and on the Drawings are as exact as could be reasonably secured, but absolute accuracy is not guaranteed. Exact locations, distances, elevations, etc. will be governed by shop drawings, the building itself, and actual field conditions.

1.10 DAMAGE BY LEAKS

A. Contractor shall be responsible for any damage to work of other Contractors that is caused by leaks in any temporary or permanent piping systems due to pipe rupture, disconnected pipes or fittings, or by overflow of equipment.

1.11 SEISMIC FORCE RESISTANCE: MECHANICAL, PLUMBING, FIRE PROTECTION SYSTEMS

A. All mechanical systems and plumbing piping systems shall adhere to the SMACNA “Seismic Restraint Manual: Guidelines for Mechanical Systems,” Third Edition, dated March 2008.

B. Equipment:
   1. Each piece of equipment installed shall be constructed and anchored to structural supports to resist a seismic force of 150% of the equipment’s operating weight in any direction. Supports, anchors, and braces shown shall be minimum.
   2. Equipment manufacturer shall design, construct, and certify that his equipment satisfies the special minimum seismic resistance requirements and shall submit calculations or test results supporting his certification.

1.12 DELIVERY, STORAGE, AND HANDLING

A. Contractor shall be responsible for delivery, storage, protection, and placing of all equipment and materials.
   1. Contractor shall protect the work and materials from damage during construction. Equipment stored at the job site shall be protected from dust, water, or other damage, and be covered if equipment is exposed to weather. Protect interiors of new equipment and piping systems against entry of foreign matter. Clean both inside and outside before painting or placing equipment in operation.
   2. Any items damaged shall be repaired or replaced, at no additional cost to the Owner.

B. Cleanliness of Piping and Equipment Systems
   1. Exercise care in storage and handling of equipment and piping material to be incorporated in the work. Remove debris arising from cutting, threading, and welding of piping.

2. Piping systems shall be flushed, blown, or pigged as necessary to deliver clean systems.
3. Contractor shall be fully responsible for all costs, damage, and delay arising from failure to provide clean systems.

1.13 WARRANTIES

A. Equipment warranties shall be provided for all equipment, with all necessary information filled in, except purchase date, in favor of the Owner.

B. The contractor shall guarantee that all work under this Section is free from defects in material and workmanship for a period of one year from the date of filing the Notice of Completion. Replacement of defective work and damage caused to work of other trades as a result of such defective work shall be the responsibility of the Contractor, and shall be made at no cost to the Owner.

1.14 ALTERNATIVE MATERIALS AND METHODS

A. These plans and specifications describe the general scope of the mechanical systems. These plans and specifications do not preclude the submittal of alternative methods or materials. Manufacturer's names and catalog numbers are stated to identify the type and quality of the equipment or materials required for the project.

B. The contractor may submit shop drawings and/or technical information on alternative equipment, materials or installation details to accomplish the intent of the plans and specifications. Approval of the alternative equipment, materials or installation details shall not relieve the contractor of any responsibility for complying with the intent of the plans and specifications. Submit the manufacturers' technical information, shop drawings, and/or written description of alternative methods for each item described by manufacturer's name and catalog number and for each component, equipment, material, or installation detail required.

1.15 SITE EXAMINATION

A. Thoroughly examine the site and verify the actual work conditions. No extra compensation will be allowed for expenses due to failure to discover site conditions which affect the work.

PART 2 – PRODUCTS

2.1 GENERAL

A. Only specified material shall be utilized in the work of this Section unless substitutions have been approved in accordance with the General Conditions and Division 1 Sections of the Specifications.

B. All materials shall be new and unused, of the best quality for the intended use, and shall be listed by the ASA, AGA, and UL as meeting their requirements and bearing their label wherever standards have been established and label services are regularly furnished by them.

2.2 PIPE AND FITTINGS

A. Gas Piping
1. Above Ground - Schedule 40 black steel

a. All concealed pipe and all pipe 2-1/2” and larger shall be welded. Fittings for welded pipe shall be seamless steel with welded neck.
b. All accessible pipe 2” and smaller shall be threaded. Fittings for threaded pipe shall be 150-lb. malleable iron, screwed and banded.

2. Below Grade (Exterior) – Schedule 40 black steel
   a. Schedule 40 black steel pipe conforming to ASTM A-120 with extruded plastic coating, threaded malleable iron fittings, wrapped with UPC-approved 20 mil PVC pipe wrap.
3. Below Grade (Exterior) – Polyethylene Yellow Gas Piping
   a. Polyethylene PE2406 yellow gas piping with fuse-sealed connections and IAPMO listed anodless steel risers may be substituted for buried steel pipe if installed by contractors with qualification certificates.
   b. Underground lines shall be Performance Pipe, “DriscoPlex 6500” PE2406 polyethylene pipe and fittings for underground gas distribution. The polyethylene plastic pipe and heat fusion fittings shall meet the requirements of ASTM D 2513.
   c. The pipe and fitting manufacturer shall be ISO Certified in accordance with the current edition of ISO 9001 and a documented quality management system that defines product specifications and manufacturing and quality assurance procedures that assure conformance with customer and applicable regulatory requirements.
   d. A licensed and bonded Contractor shall perform all underground gas distribution piping construction work. The Contractor shall secure all necessary permits before commencing construction.
   e. Materials used for the manufacture of polyethylene pipe and fittings shall be PE 2708 (PE2406) medium density polyethylene meeting cell classification 234373E per ASTM D 3350; and shall be Listed in Plastic Pipe Institute TR-r with standard grade HDB ratings of 1250 psi at 73°F, and 1000 psi at 140°F. All pipe and fittings materials shall be opaque yellow in color. Materials shall be stabilized against ultraviolet deterioration and suitable for outdoor storage for at least 4 years.
4. Underground Beneath Building (Interior) – Schedule 40 black steel
   a. Piping shall be installed in a gastight conduit. The conduit shall be made of PVC not less than Schedule 40. The interior diameter of the conduit shall not be less than 1/2 inch larger than the outside diameter of the gas piping.
   b. Conduit with one end terminating outdoors: the conduit shall extend to the outside wall of a building, and the outer end shall not be sealed. The outside end of the conduit must be screened with a minimum 1/4 inch mesh screen. The termination point must be a minimum 6 inches above grade. The inside end of the conduit must be sealed to prevent the possible entrance of a gas leakage.
   c. Conduit with both ends terminating indoors: where the conduit originates and terminates within the same building, the conduit shall originate and terminate in an accessible portion of the building and shall not be sealed. Provide access panels as required.

B. Storm Drain, Sanitary Soil, Waste, and Vent Piping:
1. Above and Below Ground
   a. Lines 2” and larger shall be service weight, hub-less cast iron soil pipe and fittings, and shall conform to the requirements of ASTM A 888 and CISPI Standard 301. Approved manufacturers: Charlotte, Tyler, or AB&I.
   b. Joints: Couplings shall conform to the requirements of ASTM C1540 and shall be heavy duty type 304 stainless steel shielded, having 4 sealing clamps for pipe sizes 1 ½” thru 4”, and 6 sealing clamps for pipe sizes 5” thru 10”. Gaskets shall comply with ASTM C-564. Anaco, Tyler, or equal.

C. Grease Waste, and Vent Piping:
1. Above and Below Ground

a. Pipes and fittings 2” and larger shall be Schedule 40 PVC- manufactured from PVC compound with a cell class of 12454 per ASTM D 1784 and conform with National Sanitation Foundation (NSF) standard 14. Pipe shall be iron pipe size (IPS) conforming to ASTM D 1785 and ASTM D 2665. Injection molded fittings shall conform to ASTM D 2665. Fabricated fittings shall conform to ASTM F 1866.

D. Condensate Piping
1. From cooling coil: Type M, hard temper, copper with wrought copper or cast brass fittings. Joints shall be made up with “Stay-Safe 50” lead free solder.

E. Cold and Hot Water Piping
1. All domestic cold water piping 3” and smaller shall be Type L, hard temper, copper pipe with wrought copper or cast brass solder joint fittings. All joints shall be made up with “Stay-Safe 50” lead free solder. A suitable non-corrosive flux shall be used at all joints.
2. Pipes below grade inside buildings shall be soft drawn, Type L or K copper with no joints below slabs. Pipes shall be installed in a PVC conduit not less than Schedule 40. The interior diameter of the conduit shall not be less than 1/2 inch larger than the outside diameter of the water piping.

2.3 UNIONS

A. Steel pipe unions shall be malleable iron, 150lb., ground joint, Grinnell Fig. 463.

B. Copper pipe unions shall be soldered joint, Nibco series 633 or 733, Mueller, or equal.

C. Dielectric unions shall be EPCO or equal.

2.4 VALVES, SPECIALTIES

A. Ball Valves, Nonpotable Water: Nibco T-580, bronze body, “Ring Ball,” conventional port, two piece, lever handle, 125 lb. Below ground installation shall have stainless steel lever handle.

B. Ball Valves, Potable Water up to 2”: Nibco T-585-80-LF or T-585HP-LF, lead-free silicon bronze body, “Ring Ball,” full port, two piece, lever handle, 125 lb. Below ground installation shall have stainless steel lever handle.

C. Ball Valves, Potable Water over 2”: Nibco T-580-80-LF, lead-free silicon bronze body, “Ring Ball,” conventional port, two piece, lever handle, 125 lb. Below ground installation shall have stainless steel lever handle.

D. Check Valves, Nonpotable Water:
1. Nibco T-480, bronze body, inline lift type, Teflon seat, and discs, spring actuated, 125 lb.
2. Nibco T-413, Stockham B-345, bronze body, Y-pattern lift type, Class 200.

E. Check Valves, Potable Water:
1. Nibco T-480-LF, lead-free silicon bronze body, inline lift type, Teflon seat, and discs, spring actuated, 125 lb.
2. Nibco T-413-Y-LF, lead-free silicon bronze body, Y-pattern lift type, Class 200.

F. Gas Shut-off Valves:
1. At Building Service: Homestead Fig. 601, semi-steel, lubricated plug, lever handle, 200. Lb. Install CALIFORNIA Series 300 seismic actuated shut off valve at entrance to building. Brace per manufacturer’s instructions.

2. At Connection to Equipment: Jomar T-203 gas ball valves, ¼-turn, hot forged brass, 2-piece design, standard port, appliance type with side tap/drain. Provide with ADA certified stainless steel flex connection 12” max.

G. Relief Valves: Water heater temperature/pressure relief valve, Watts, M&M, or equal with ASME rating, and AGA certified design. Set at 125 psi and 210°F.

H. Backflow Preventers (where shown on the Drawings or required by local code):
1. Atmospheric type; Wilkins #35 series.
2. Pressure type: Wilkins #720A series.
3. Reduced pressure type:
   a. ¼” to 2” – Wilkins #975-XLMS series.
   b. 2 ½” to 10” – Wilkins #375 series.

I. Water Pressure Regulating Valves: Wilkins 500 YSBR series. Install where pressure to building exceeds 70 psi.

J. Gas Pressure Regulators: American Regulator, Series 1813C. Regulators shall be sized for full gas capacity of equipment as scheduled on the Drawings. Inlet pressure shall be 5 psig. Outlet pressure shall be 7” water column. Regulators installed indoors shall have relief opening piped to outdoors. Size relief pipe in accordance with ANSI Z223.1 “National Fuel Gas Code.”

2.5 HANGERS, SUPPORTS

A. Installation of piping shall be such that damage cannot result through loading, expansion, or contraction of piping. Anchors shall be installed to obtain uniformity of pipe movement.

B. Pipe supports shall be spaced sufficiently close to support pipes properly without formation of pockets. Supports and hangers shall be installed at ends of mains and branches and maximum intermediate spacing shall be as follows:

	MAXIMUM SPACING, (FT.) Pipe Diameter, Inches		MINIMUM ROD DIAMETER Pipe Dia. Inches	Rod Dia. Inches
	1” &Less	1-1/4”& More		
Steel	8	10	2 & Less	3/8
Copper	6	8	2-1/2 to 3	½
Cast Iron	5 (One min. per length & fitting)		4 & Larger	5/8

C. Pipe hangers shall be Superstrut, B-Line, or equivalent Grinnell. All hangers shall be electro-chromate finished. Hanger rods shall have electro-galvanized finish.

D. Steel pipe, cast iron soil pipe: C-711 pipe hangers.

E. Copper tubing: C-711 pipe hanger complete with C-716 isolator.

F. Insulated pipe: C-711 pipe hanger fitted to outside of insulation with C-790 galvanized shields.

G. Trapeze Hangers
1. Grouped pipes may be supported by A-1200 channel bolted to rods.
2. Copper and steel pipe shall be attached to channels with A-716 “Cush-A-Clamp.”

H. Cast iron soil pipe shall be supported with C-711 pipe hangers with rods attached to the bottom of channels.

I. Point of Support Connectors
   1. Wood Construction
      a. 540 side beam hanger for stationary pipes.
      b. S-541 for pipes subject to movement.
   2. Vertical Pipe Risers: Vertical pipes risers shall be securely supported with C-720 pipe clamps (C-720P for bare cold water pipe) anchored to construction.

J. Provide resilient mounting for domestic water piping. Thermal insulation may serve as resilient mounting for insulated piping.

K. Suspended water piping shall be anchored with steel struts installed at midpoint of each run.

L. No valve or piece of equipment shall be used to support piping.

2.6 CLEANOUTS

A. Cleanouts in membrane damp-proofed floors shall have flashing flange and membrane clamps. Plugs shall be bronze, with cast iron body ferrule for cast iron pipe.

B. Floor Cleanouts (FCO): Zurn ZN 1400-HD, “Level-trol” adjustable cleanouts, dura-coated cast iron with gas and water-tight ABS tapered thread plug, and round scoriated top, adjustable to finished floor .

C. Grade Cleanouts (GCO): Zurn Z-1474-IN or equal JR Smith. Housing to be dura-coated cast iron body with integral anchor flange and scoriated cover with lifting device. Cleanouts in un-paved areas shall be set in 18” x 18” x 4” concrete pads.

D. Wall Cleanouts (WCO):
   1. Copper tubing: Nibco Figure 816 or 817, with Zurn Z-1462, 6” x 6” polished chrome-plated bronze wall plate and frame.
   2. Cast iron pipe: Zurn Z-1441, dura-coated with gas and water-tight bronze, taper thread plug and round smooth stainless steel access cover with securing screw.
   3. Steel pipe: Zurn Z-1468, round stainless steel wall access cover, complete with securing screw and bronze raised hex head plug for steel pipe.

2.7 SLEEVES, WALL PLATES

A. Service pipe through exterior wall, roofs: Crane Style BC wall and ceiling plates; chrome plated at finished rooms.

B. Pipes through, under footings: 18 gauge iron sleeves two diameters larger than pipe, cast in concrete, annular space filled with mastic or plastic bituminous cement.

C. Pipes through fire rated walls shall be protected with fire retardant mastic as detailed on the Drawings. Installation shall be in full accordance with the requirements of the UL system number. Hilti or approved equal.

D. Wall and ceiling plates: Crane Style BC or equal; chrome plated at finished rooms.

E. Pipes through floors, interior concrete walls, and through fire rated wall and smoke stop partitions: 18 gauge iron sleeves, two diameters large than pipe, annular space filled with 3M Brand Fire Barrier CP-25 caulk.

F. Pipes through 1-hour walls shall be protected with fire retardant mastic as detailed on the Drawings. Installation shall be in full accordance with the requirements of the UL system number. Hilti or approved equal.

2.8 ACCESS DOORS

A. Where construction is not inherently accessible, provide adequately sized and conveniently located access doors in ceiling, walls, and furring for servicing valves, equipment, and appurtenances etc.

B. Access doors shall be Karp, Milcor, or equal, prime coated steel for all surfaces except ceramic tile, 12” x12” minimum size as required. Locks shall be flush, screwdriver operated.
1. Style KDW for gypsum board surfaces.
2. Style PL for plaster surfaces.
3. Style 210 for acoustic tile surfaces.
4. Style DSC 214-M satin finish stainless steel at ceramic tile surfaces.
5. Style “Fire Rated” at rated ceilings and walls.

2.9 PIPE INSULATION

A. Insulate all hot water supply piping, all hot water return piping, all cold water supply piping in exterior walls or unconditioned spaces, and all primary roof drain piping in conditioned spaces with John Manville “Micro-Lok” 650, Fiberglass, Certainteed, or equal, rigid fiberglass one-piece pipe insulation with and all purpose jacket. Jackets shall be constructed of high density, white kraft bonded to aluminum foil with fiberglass yarn, with a pressure sensitive closure system.

B. All insulation shall have composite (insulation, jacket, and adhesive used to adhere the jacket to the insulation) Fire and Smoke Hazard ratings as tested under procedure ASTM E-84, NFPA 255 or UL 723, not exceeding: Flame Spread – 25, Smoke Developed – 50.

C. Inserts shall be installed at outside hangers. Inserts between the pipe and pipe hangers shall consist of rigid pipe insulation of thickness equal to the adjoining insulation. Inserts shall not be less than 10” long for pipe sizes through 2 ½” and not less than 12” long for pipes larger than 2 ½”.

D. Metal shields shall be applied between hangers or supports and the pipe insulation. Shields shall be formed to fit the insulation and shall extend up to the centerline of the pipe and the length specified for hanger inserts.

E. Insulation thickness shall be as follows:

1. All cold water piping:	1”
2. All hot water piping 1” and smaller:	1”
3. All hot water piping 1 ¼” and larger:	1 ½”
4. All primary roof drain piping:	1”

2.10 PIPE LABELS

A. All new domestic cold water, hot water, and hot water recirculation piping shall be clearly labelled.

B. Industrial safety solutions piping labels shall be rated for indoor and outdoor use and be attached with permanent adhesive.

C. Labels shall show the direction of flow and indicate the process media. Pipe labeling color and text size shall conform to ANSI/ASME A13.1-2007. Process piping shall be labeled a minimum of twice per room in locations designated by the Engineer.

2.11 FIXTURES

A. The quantity and location of fixtures shall be taken from the Architectural and Plumbing Drawings. Provide adequate supports and all standard trim normally furnished for fixtures. All enamel shall be acid resisting. Traps, unless otherwise noted shall be 17 gauge brass tubing, chrome plated when exposed.

B. Except as otherwise shown, provide ¼" steel backing plates, 36" wide by 12" high minimum size, secured to a minimum of three studs by welding, or with ¼" x 2 ½" lag screws for all wall hung fixtures for which no other means of support is specified.

C. Stops and supplies: Provide stops for all fixtures. Unless otherwise specified, stops exposed at lavatories and similar fixtures shall be Chicago #1016-ABCP, chrome plated, loose key. Concealed stops shall be Chicago #1771.

D. All fixtures shall meet or exceed the requirements of the California Administrative Code, Title 24, Part 5.

2.12 SHOCK ABSORBERS

A. Zurn, "Shoktrol," or equal JR Smith, stainless steel bellows. Install with gate valve shut-off and access door at all flush valves or other automatic valves. A single unit sized in accordance with the manufacturer's recommendations may serve batteries of valves.

2.13 VALVE BOXES

A. Christy #F-08, complete with concrete cover and required extensions. Index all covers "GAS" or "WATER" as required for service use.

2.14 STRAINERS

A. For pipes 1 ½" – 2": NIBCO T/S 221/222-A, or Wilkins S or YB series strainer, 20 mesh type 304 stainless steel screen, bronze construction 200 psi CWP or approved equal. Provide with hose bib drain.

B. For pipes 2 ½" & larger: NIBCO F-721A, or Wilkins F series, flanged, 125 lb., tapped bolted bonnet with plug and stainless steel screen.

PART 3 – EXECUTION

3.1 SURFACE CONDITIONS

A. This Contractor shall be held to have examined the site and compared it with the Contract Documents, and to adequately understand the conditions under which the work is to be performed. In the event of discrepancy, this Contractor shall notify the Architect and proceed as directed. This Contractor shall be held responsible for all existing conditions, whether or not accurately described, and no allowance shall subsequently be made on his behalf for any error, omission, or extra expense due to failure or neglect to make such examination and notification.

B. Prior to commencing the work of this Section, this Contractor shall inspect the installed work of other trades and verify that their work is sufficiently complete to permit the start of work under this Section and that the completed work will be in complete accordance with the original design. In the event of discrepancy immediately notify the Architect and proceed as directed.

3.2 ACCESSIBILITY

A. Equipment shall be placed and piping connections made in such a manner that all routine adjustments and maintenance operations may be carried out without inconvenience and so that all code requirements for clearances are maintained.

3.3 VIBRATION AND SOUND CONTROL

A. Make all necessary provisions to prevent the transmission of vibration to the building structure, including flexible pipe connections to motor driven equipment, resilient mounting for piping, and sealing off pipe and duct penetrations of walls and roof.

3.4 INSULATION

A. Insulation shall be applied in complete accordance with the manufacturer's published installation instructions. All insulation shall be applied on clean, dry surfaces and shall be continuous through wall and ceiling opening and sleeves. All joints shall be firmly butted together and longitudinal jacket laps and butt strips shall be smoothly secured. Specified adhesives, mastics, and coatings shall be applied at the manufacturer's recommended minimum coverage per gallon.

3.5 PIPING INSTALLATION – GENERAL

A. Rough in shall proceed as rapidly as general construction will permit. All rough-in shall be complete, at locations verified by Architect and Owner, and tested and inspected prior to installation of concrete, lath, plaster, gypsum wallboard, or other finishes.

B. All piping shall be concealed in finished rooms, installed in furred walls and partitions. Where furred or suspended ceilings occur, piping shall be installed in the concealed space at points adjacent to beams and/or other structural members, and coordinated with ductwork and equipment. Where exposed piping occurs, it shall be installed parallel to or at right angles to building walls, unless specifically shown otherwise on the Drawings.

C. Installation of piping shall be such that damage cannot result, through thermal expansion or contraction, to piping, building, or pipe hangers and supports. Anchors shall be installed at midpoints of all runs in main piping for the purpose of localizing pipe expansion or prevention of creepage.

D. All pipe lines shall be installed free from traps and air pockets, true to line and grade, with suitable supports properly space. All piping shall be installed without undue stresses and with provision for expansion and contraction.

E. All piping shall be new and free from foreign substances. American standard pipe threads shall be used for IPS threaded work. Joints in threaded piping shall be made up with Teflon tape applied to the male threads only. No screwed pipe joints shall be caulked or packed with rope or other packing materials. Pipe shall be free from tool marks, threads cut accurately with not more than two (2) threads showing beyond fitting. Friction wrenches shall not be used with plated, polished, or soft metal piping. All changes in pipe size shall be made with reducing fitting. Bushings will not be permitted.

F. Protect unattended openings in piping during construction.

G. Weld all pipe 2.5 inches and larger. Use the following procedure. All welders must be AWS certified. AWS B2.1 SMAW 6G Pipe Welding Procedure Specifications.

Welding process: SMAW	Grove Angle: 60 degrees
Position: 6G Fixed position	Material/Spec: A 106
Weld Progression: Up	Thickness (pipe/tube): Groove (in.) .280
Backing: No	Notes: Sch. 40 Pipe
Current/Polarity: DCEP	Filler Metal Class: E6010Rt/E7018F1
Root Opening: 1/16 to 1/8	Other Filler Metal Class: Rt. 1/8, 3/32 filler

H. Welded joints shall be beveled and butt-welded. Reductions of pipe shall be made with forged steel welding fittings. Branch reductions of two or more pipe sizes smaller than the main, may be Bonney "Weld-O-Let" fittings, or equal. Job fabricated reductions and branches shall not be used. All pipe burrs shall be reamed out. Welding rods shall be as follows, or approved equal:

Pipe Size	**Arc Welding**	**Gas Welding**
2" and larger	Fleetweld #5	Oxweld #1 or Page Hi-Test M
1 ½" and larger	None	Oxweld #1 or Page Hi-Test M

I. No water or drainage piping shall pass over electrical equipment unless adequate protection is provided to prevent damage by leaks or condensation.

J. All copper tubing shall be formed in a workmanlike manner, in accordance with the Pipe and Tube Bending Handbook of the Copper and Brass Research Association. A tube bender giving support to the periphery of the tube shall be used. The tubing shall be protected against flatting or other injury.

K. All copper connections and joints shall be made in accordance with the Copper Tube Handbook, Copper and Brass Research Association. No swaged connections will be permitted. All valves, pumps, and similar equipment shall be connected to copper piping through union or flange adapter fittings.

L. Valves, cocks, etc., shall be installed to allow convenient accessibility and operation.

M. Unions and flanges shall be installed to allow convenient replacement of all equipment and clearing tubes.

N. A union connection shall be installed downstream from all valves, at equipment connections and at other locations as required or directed.

O. Shut off valves shall be provided in all main services, and where required to permit proper servicing of equipment. Valves of one type shall be of one manufacturer.

P. All valves shall be of the same size as the pipelines in which they are installed, unless specifically sized on the Drawings. All hand controlled line valves shall be ball valves, except where throttling control or frequent operation is required, in which case globe or angle valves shall be used. Globe valves in horizontal lines shall be installed with stem in horizontal to permit line draining. All globe and angle valves shall be installed to close against pressure. Disc valves shall have discs suitable for the services for which they are to be used.

Q. All valves shall be accessible and shall not be installed with the stems below the horizontal plane. Provide access panels at walls, ceilings, or floors.

R. Provide prime coated escutcheon plates at all points where exposed piping penetrates finished wall ceilings or floors.

S. Cutting or boring of joists or other structural members shall be done only when alternative routing is impossible and only upon written approval of the Architect or Owner.

3.6 INSTALLATION, PIPING

A. Gas Piping
1. Gas piping shall slope back to meter, where possible.
2. Bottom of vertical natural gas lines shall be fitted with 6” long capped drip legs.
3. In addition to the main shut-off valve, a gas stopcock shall be installed at each piece of gas-fired equipment.
4. Where piping is in contact with a material or atmosphere corrosive to the piping system, the piping and fittings shall be coated with a corrosion-resistant material. Any such coating used on piping or components shall not be considered as adding strength to the system.

B. Condensate Piping
1. Indirect waste piping shall be installed to a uniform minimum grade of ¼” per foot unless otherwise noted.
2. Changes in direction of indirect waste piping shall be accomplished by the use of appropriate drainage fittings.
3. Drilling and tapping of indirect waste pipes and the use of saddle hubs and bands are prohibited.

C. Flashing
1. All roof and wall penetrations shall be flashed and counterflashed water tight with 26 gauge sheet metal, except as noted.
2. Vents through roof shall be flashed with Semco #1100-4 lead flashing assemblies. Flashing shall extend over top of pipe and shall be turned down inside top of pipe.

D. Soil, Waste, Vent, Drain Piping
1. Soil, waste, and vent piping occurring within the building shall be installed to a uniform minimum grade of ¼” per foot unless otherwise noted. Vent piping shall be graded so that all condensation shall flow directly to a soil or waste line.
2. Changes in direction of drainage piping shall be accomplished by the use of appropriate drainage and sanitary fittings.
3. Protection against breakage of piping passing under or through walls shall be provided using specified sleeves and caulking.
4. Adapters shall be installed between threaded iron and soil pipe.
5. Test tees shall be installed at the foot of all soil, waste, and storm water stacks.
6. Cleanouts shall be located where indicated on the Drawings; at all horizontal offsets; at ends of waste or sewer branches more the 5’ in length; at intervals of 100’ in straight runs of piping, or at closer intervals if directed or required by local code. Location of cleanouts in finished spaces shall be approved by the Architect prior to installation.

E. Hot and Cold Water Systems
1. Di-electric unions shall be installed where copper pipe is connected to galvanized steel piping or stub outs.
2. Connections from copper pipe to fixture supply fittings shall be made with copper or brass nipples.

3. All domestic water piping shall be kept clear of the building structure. Where it is within 1” of the building structure, it shall be wrapped with felt (3/16” minimum thickness).
4. To the greatest extent possible, domestic cold water piping shall be kept separated from hot piping and where there is a choice shall be run in the coolest portion of the available space.

F. Plumbing Fixtures
1. Space between wall mounted fixtures and wall surface shall be neatly pointed up with silicone rubber compound of color matching fixture.
2. All exposed bolt heads and nuts used to secure fixtures shall be concealed with vitreous china caps.

G. Excavation and Backfill
1. Provide all excavation, trenching, and backfill in connection with the work of this Section.
2. Excavation shall be carried to 4” below the bottom of pipes. Provide a sand bedding for all sloped drainage piping, and provide smooth uniformly graded bedding of firm but yielding material for all other piping, catch basins, and similar structures.
3. Backfill material shall be non-corrosive and free from all foreign material that could damage pipes. Backfill shall be placed in 6” layers, each layer tamped, and compacted to 95% of maximum dry density (ASTM D-1557-64T (c) compaction test procedure).

H. Storm Drainage Piping
1. Roof drains shall be installed where indicated on the Drawings, in conjunction with work specified in “Membrane Waterproofing” Section. This Contractor shall be responsible for a watertight installation.
2. Rain water leaders connected to roof drains and gutter systems shall be standard weight galvanized steel pipe and fittings, except where otherwise noted, and shall be continuous from drain to connection with underground storm water drainage facilities. Provide a cleanout at the base of all vertical to horizontal transitions.
3. Sheet metal downspouts are furnished and installed by others.
4. Downspouts inside building, if shown, shall be continuous from drain to curb or connection with underground storm water drainage facilities. Provide a cleanout at the base of all vertical to horizontal transitions.
5. Insulate storm drain piping where it is located above a ceiling or within a concealed space. Overflow piping is not required to be insulated.

3.7 INSTALLATION, HANGERS & SUPPORTS

A. Installation of piping shall be such that damage cannot result through loading, expansion, or contraction of piping. Anchors shall be installed to obtain uniformity of pipe movement.

B. Hanger rod sizes shall be no smaller than 3/8-inch for pipe and tube sizes ½ to 4 inches and ½ inch for sizes 5-8 inches.

C. Pipe supports shall be spaced sufficiently close to support pipes properly without formation of pockets. Hangers shall be installed at ends of mains and branches. Maximum horizontal support spacing shall be as follows:
1. Steel Pipe for Water or DWV: 10 feet for pipe sizes ¾ inch and smaller and 12 feet for sizes 1 inch and larger.
2. Steel and Tinned Copper Pipe for Gas: 6 feet for ½ inch pipe; 8 feet for sizes ¾ to 1 inch, and 10 feet for sizes 1 ¼ inch and larger.
3. Copper Tube and Pipe, soldered or brazed: 6 feet for pipe sizes 1 ½ inches and smaller and 10 feet for sizes 2 inches and larger.
4. Hubless Cast-Iron shall be supported at every other joint, unless over 4 feet, then support each joint. Support adjacent to joint, not to exceed 18 inches, brace at not more

than 40 foot intervals to prevent horizontal movement. Support at each horizontal branch connection. Hangers shall not be placed on the coupling.

D. Provide resilient mounting for domestic water piping. Thermal insulation may serve as resilient mounting for insulated piping.

E. Suspended water piping shall be anchored with steel struts installed at midpoint of each run.

F. No valve or piece of equipment shall be used to support piping.

G. Pipes through studs or joists shall be isolated from structure with properly sized Hubbard "Hole-Rite" suspension clamps.

3.8 TESTING, INSPECTIONS

A. General
1. This Contractor shall not allow or cause any work of this Section to be covered or enclosed until it has been inspected, tested, and approved by the Architect and the authorities having jurisdictions over the work. Should any of this work by enclosed or covered up before such inspection, testing, and approval, this Contractor shall uncover the work, have the necessary inspections, tests, and approvals made and, at no expense to the Owner, make all repairs necessary to restore both his work and that of other contractors that may have been damaged, to be in conformity with the Contract Documents.

B. Tests
1. This Contractor shall make all tests required by all local, state, and federal laws, codes, ordinances, and regulations having jurisdiction over this work.
2. Furnish all necessary labor, materials, and equipment for conducting tests, and pay all expenses in connection therewith. Should leaks develop while testing, repairs shall be made, and tests shall be repeated until a satisfactory test is obtained.
3. Water Piping shall by hydrostatically tested for 6 hours at 150 psi. All equipment shall be tested water tight at utility pressure.
4. Drainage and Vent Piping shall be tested for 1 hour by plugging all outlets and filling the pipes with water to the top of vertical sections of pipes. No loss of water shall be permitted.
5. For pressures above 14 inches water column, contractor shall test all new gas piping with air at a minimum pressure of 60 psi for a duration of four hours with no discernible reduction in pressure. Shutoff valves may not be used for isolation of piping during testing, unless the valve and valve-closing mechanism are rated for the test pressure.
6. For pressures below 14 inches water column, contractor shall test all new gas piping with air at a minimum pressure of 15 psi for a duration of four hours with no discernible reduction in pressure. Shutoff valves may not be used for isolation of piping during testing, unless the valve and valve-closing mechanism are rated for the test pressure.
7. Upon completion of the installation, the gas utility provider shall test entire piping system, including both new and existing piping, to ensure that the system is safe to be placed in service. Contractor shall be responsible for being familiar with gas utility provider testing requirements and assisting with gas utility provider test procedures. Any leaks or deficiencies shall be repaired at no additional cost to the owner.

3.9 DOMESTIC WATER SYSTEM STERILIZATION

A. Upon completion of this work, the domestic water system shall be thoroughly flushed, sterilized, and reflushed. Sterilization and reflushing shall be performed using the following procedure.
   1. All work shall be performed in the presence of the inspector.
   2. Introduce chlorine or a solution of sodium hypochlorite, filling the lines slowly and supplying the sterilization agent at a rate of 50 parts of chlorine per million, as determined by residual chlorine tests at the ends of all branches. Open and close all valves while the system is being chlorinated to insure uniform distribution.
   3. After the sterilizing agent has been applied for 24 hours, test for residual chlorine at the ends of the branches. If less than 5 ppm is indicated, repeat the sterilization procedure.
   4. When tests show at least 5 ppm of residual chlorine, flush out the system until all traces of the chemical are removed.

B. After a period of 48 hours minimum, bacteriological tests, using samples from at least 3 representative points shall be made by recognized testing agency, who shall certify to the Architect that the system is bacteriologically safe and at least equal in safety to that of the principal water supply. The laboratory report and certification shall be transmitted to the Architect and Owner.

3.10 ADJUSTING

A. Properly adjust all stops, and controls, and demonstrate safe and satisfactory operation of all equipment.

3.11 CLEANING

A. Flush all water piping systems. Remove, clean, and replace all strainer baskets prior to final inspection.

B. Blow out all compressible fluid piping with compressed air before connecting with regulators or equipment.

3.12 CLEANUP

A. Upon completion of the work of this Section, remove all surplus material, debris, and equipment associated with or used in the performance of this work.

END OF SECTION

SECTION 23 00 00

HVAC

PART 1 – GENERAL

1.1 INCLUDED

A. This section covers mechanical work, complete. Work includes furnishing, installing, calibrating, adjusting, testing, documenting, and starting up equipment in accordance with these Specifications, the accompanying Plans, and the directions of the Engineer.

1.2 LICENSES, PERMITS, AND FEES

A. The Contractor shall provide, procure, and pay for all licenses, permits, fees, etc. as required to carry on and complete their work.

1.3 CODES AND STANDARDS

A. All work shall be done in code with all applicable local, state, and federal building safety codes, ordinances, and regulations. Additionally, all work shall conform to the 2022 editions of the following standards:
1. National Fire Protection Association.
2. California Mechanical Code.
3. California Plumbing Code.
4. Underwriters Laboratories.
5. Titles 8, 17, 19, 21, 24 of the California Code of Regulations.
6. California Electric Code.
7. SMACNA Standards.
8. ASHRAE Standards 55 and 62.1.

B. When the Contract Documents call for materials or construction of a higher standard than is required by the above, the Contract Document requirements shall take precedence over the requirements of the applicable laws, ordinances, rules, or regulations. Nothing in the Contract Documents shall be interpreted as permitting work in violation of said laws, rules, and/or regulations.

C. The Contractor for this work shall furnish, without extra charge, any additional materials and/or labor as may be required for compliance with these laws, rules, and/or regulations though such materials and/or labor are not specially set forth in the Contract Documents.

1.4 LICENSING REQUIREMENTS

A. All work of Division 22 and 23 shall be performed by an appropriately licensed contractor. The licenses shall be current, valid through the term of the contract and in the name of the contractor.
1. All HVAC work, which includes warm air heating systems and water heating pumps, ventilating systems, air conditioning systems, and ductwork, registers, flues, humidity, and thermostatic controls in connection with these systems, shall be performed by a C-20 – Warm-Air Heating, Ventilating and Air-Conditioning Contractor.
2. All hydronic piping systems shall be performed by a C-4 – Boiler, Hot Water Heating and Steam Fitting Contractor.

3. All hydronic piping insulation shall be performed by a C-2 – Insulation and Acoustical Contractor.

1.5 SUBMITTALS

A. General Requirements
1. Submittal lists and drawings shall include identifying marks assigned by the Drawings and Specifications.
2. Review of drawings and other material submitted shall not be construed as complete check or constitute a waiver of the requirements of the Drawings and Specifications, but will indicate that the material submitted is acceptable in quality and utility. This review shall not relieve the Contractor of the responsibility to fit the proposed materials to the spaces provided, and to effect necessary rearrangements or construction of other work.
3. All fixtures, materials, and equipment equal in quality and utility to these herein mentioned will be accepted. When specific names are used in describing fixtures, materials, and equipment they are mentioned as standards only, but this implies no right on the part of the Contractor to use other fixtures, material, and equipment or methods, unless approved as equal in quality and utility by the Architect.
4. Before any fixtures, materials, or equipment are purchased, the Contractor shall submit to the Architect for approval, a complete list of materials, fixtures, and equipment, giving the manufacturer's names, catalog number, capacity, size, power requirements, etc.
5. The Contractor shall submit for the approval of the Architect, shop drawings of proposed material and equipment that differ from the specified materials and equipment, and of any specified materials and equipment with special conditions and/or arrangements. These drawings shall show necessary modifications of owner, plumbing, electrical, and mechanical work required by the proposed materials and equipment.

B. Submittal – Product Data
1. Submit manufacturer's product data for all HVAC equipment, in compliance with specifications.

C. Coordination/Layout Shop Drawings
1. Prepare complete consolidated layout drawings for all new systems, and for existing systems that are in the same areas. Shop drawings shall be prepared using AutoCAD 2004 or newer and shall be drawn at a minimum ¼" = 1' 0" scale. All drawings shall be fully coordinated with HVAC, Plumbing, Fire Protection, Electrical, Structural, and Architectural work.
2. Clearly identify and dimension the proposed locations of the principal items of equipment and adequate clearance for all equipment, piping, pumps, valves, and other items. Provide detailed layout of all piping systems showing the proposed routes.
3. Show the access means for all items requiring access for operations and maintenance.
4. Submit shop drawings to Architect for approval, prior to fabrication or installation of any work. Do not install equipment or piping until layout drawings have been approved. Any work installed without prior shop drawing approval shall be removed at the Contractor's expense.

1.6 COOPERATION WITH OTHER TRADES

A. Cooperate fully with other trades doing work on the project as may be necessary for the proper completion of the project. Refer to the Structural, Plumbing, and Electrical Drawings for details of the building structure and equipment installation that will tend to overlap, conflict with or require coordination with the work of this Section, and schedule this work accordingly.

B. Any work done without regard for other trades shall be moved, replaced, or redone as required, without extra charges to Owner.

1.7 DIVISION OF WORK BETWEEN DIVISIONS 23 AND 26

A. Close coordination between the electrical and mechanical trades is a part of the work that is required by this contract. No allowance will be made for omissions based on incorrectly assuming another trade will be performing your work. Confirm your scope of work with the general contractor.

B. The division of responsibilities between trades supplying equipment in other Divisions may be different. For instance, Division 26 contractor may be required to supply disconnect switches and starters for non-HVAC mechanical equipment supplied under other Divisions.

C. Division 23 Responsibilities
1. Assume responsibility for the proper functioning of the HVAC systems in their entirety.
2. Furnish and install all conductors and conduit required for control of HVAC equipment.
3. Make all terminations with the exception of power conductors.
4. Furnish and install all control panels and devices to provide a complete and functional controls system, including all controls transformers.
5. Furnish and install motor starters for all equipment specified in Division 23.
6. Install duct smoke detectors furnished by fire alarm contractor in buildings with fire alarm systems.
7. Furnish and install duct smoke detectors in buildings without fire alarm systems.
8. Furnish and install all control conductors and conduit connecting duct smoke detectors to smoke dampers and fan start controls.
9. All electrical work performed under Division 23 shall conform to the requirements of Division 26.

D. Division 26 Responsibilities
1. Furnish and install all raceways, conduit, disconnect switches, and conductors necessary for electrical power supply.
2. Make all power supply terminations to motors, starters, disconnect switches, control transformers, and other mechanical devices.
3. Fire alarm contractor to furnish duct smoke detectors in buildings with fire alarm systems.
4. Provide power to all duct smoke detectors and smoke dampers.
5. Coordinate all work with mechanical contractors.

1.8 AS-BUILT DRAWINGS

A. A complete set of Contract Drawings shall be maintained at the work site, and all changes in the work shall be recorded on this set, on a daily basis. The final as-built drawings shall be submitted to the Architect for approval.

1.9 DESIGN DRAWINGS

A. The drawings indicate diagrammatically the general layout of the mechanical systems and other related work. Field verification of scaled dimensions taken from the Drawings is required.

B. The Contractor shall review and compare the Architectural, Structural, Plumbing, Mechanical, and Electrical Drawings and all Owner supplied equipment Drawings, and adjust their work to be in conformity with the conditions indicated thereon. Discrepancies between drawings, between drawings and actual field conditions, or between Drawings and Specifications, shall promptly be brought to the attention of the Architect for a determination of the modifications to be effected. In the event that a major modification is required, a Change Order will be prepared.

1.10 VERIFICATION OF EXISTING CONDITIONS AND DEMOLITION

A. Before installation of any new work, verify the location, size, and other conditions at all points of connection to services or other existing piping, and at all locations where new work will cross or pass near existing piping, electrical, or other facilities.

B. Remove ductwork, piping, controls, fixtures, and equipment that is not to remain in service as shown on the Drawings or as required. This included the removal of associated appurtenances and supports.

C. Patch, cap, or repair existing works affected by this demolition in concealed spaces within six (6) inches of a live main or branch.

D. Deliver removed material to the Owner as directed by the Architect. Dispose of all other removed material offsite.

E. Information shown relative to existing services is based upon available records and data during preparation of the Drawings, but shall be verified. Make reasonable deviations found necessary to conform to actual locations and conditions, without extra charge.

1.11 OPERATING AND MAINTENANCE INSTRUCTIONS

A. Furnish three sets of typewritten instructions covering maintenance, adjustment, and operation of each piece of apparatus, bound in a hard cover loose-leaf binder. Neatly obscure or cross out inapplicable data from manufacturer's literature. Submit data to the Architect.

B. Operating instructions shall show sequence of operations, lubrication, care, and maintenance requirements of all equipment. Final acceptance of the work will not be made until a satisfactory submission of this material is received and approved by the Architect.

C. The Owner's authorized representative shall be instructed in the operation and servicing of all HVAC & plumbing systems.

1.12 ACCURACY OF DATA

A. The data given herein and on the Drawings are as exact as could be reasonably secured, but absolute accuracy is not guaranteed. Exact locations, distances, elevations, etc. will be governed by shop drawings, the building itself, and actual field conditions.

1.13 DAMAGE BY LEAKS

A. Contractor shall be responsible for any damage to work of other Contractors that is caused by leaks in any temporary or permanent piping systems due to pipe rupture, disconnected pipes or fittings, or by overflow of equipment.

1.14 SEISMIC FORCE RESISTANCE: MECHANICAL, PLUMBING, FIRE PROTECTION SYSTEMS

A. All mechanical systems and plumbing piping systems shall adhere to the SMACNA "Seismic Restraint Manual: Guidelines for Mechanical Systems," Third Edition dated March 2008.

1.15 DELIVERY, STORAGE, AND HANDLING

A. Contractor shall be responsible for delivery, storage, protection, and placing of all equipment and materials.

1. Contractor shall protect the work and materials from damage during construction. Equipment stored at the job site shall be protected from dust, water, or other damage, and be covered if equipment is exposed to weather. Protect interiors of new equipment and piping systems against entry of foreign matter. Clean both inside and outside before painting or placing equipment in operation.
2. Any items damaged shall be repaired or replaced, at no additional cost to the Owner.

B. Cleanliness of Piping and Equipment Systems
1. Exercise care in storage and handling of equipment and piping material to be incorporated in the work. Remove debris arising from cutting, threading, and welding of piping.
2. Piping systems shall be flushed, blown, or pigged as necessary to deliver clean systems.
3. Contractor shall be fully responsible for all costs, damage, and delay arising from failure to provide clean systems.

1.16 WARRANTIES

A. Equipment warranties shall be provided for all equipment, with all necessary information filled in, except purchase date, in favor of the Owner.

B. The contractor shall guarantee that all work under this Section is free from defects in material and workmanship for a period of one year from the date of filing the Notice of Completion. Replacement of defective work and damage caused to work of other trades as a result of such defective work shall be the responsibility of the Contractor, and shall be made at no cost to the Owner.

1.17 ALTERNATIVE MATERIALS AND METHODS

A. These plans and specifications describe the general scope of the mechanical systems. These plans and specifications do not preclude the submittal of alternative methods or materials. Manufacturer’s names and catalog numbers are stated to identify the type and quality of the equipment or materials required for the project.

B. The contractor may submit shop drawings and/or technical information on alternative equipment, materials or installation details to accomplish the intent of the plans and specifications. Approval of the alternative equipment, materials or installation details shall not relieve the contractor of any responsibility for complying with the intent of the plans and specifications. Submit the manufacturers' technical information, shop drawings, and/or written description of alternative methods for each item described by manufacturer's name and catalog number and for each component, equipment, material, or installation detail required.

1.18 SITE EXAMINATION

A. Thoroughly examine the site and verify the actual work conditions. No extra compensation will be allowed for expenses due to failure to discover site conditions which affect the work.

PART 2 – PRODUCTS

2.1 PACKAGED ROOFTOP UNITS – AC-1 THRU AC-3

A. General:

1. Outdoor mounted, electrically controlled, heating and cooling unit utilizing a fully hermetic scroll compressor(s) for cooling duty operation.
2. Factory assembled, single-piece heating and cooling rooftop unit. Contained within the unit enclosure shall be all factory wiring, piping, controls, and special features required prior to field start-up.
3. Unit shall be installed in accordance with the manufacturer's instructions.
4. Unit must be selected and installed in compliance with local, state, and federal codes.

B. Quality Assurance:
1. Unit shall meet and exceed ASHRAE 90.1 minimum efficiency requirements.
2. Unit shall be rated in accordance with AHRI Standards 210/240.
3. Unit shall be designed to conform to ASHRAE 15.
4. Unit shall be UL-tested and certified in accordance with ANSI Z21.47 Standards and UL-listed and certified under Canadian standards as a total package for safety requirements.
5. Insulation and adhesive shall meet NFPA 90A requirements for flame spread and smoke generation.
6. Unit casing shall be capable of withstanding 500 hour salt spray exposure per ASTM B117 (scribed specimen).
7. Unit shall be designed in accordance with ISO 9001, and shall be manufactured in a facility registered by ISO 9001:2015.
8. Curb shall be designed to conform to NRCA Standards.
9. Unit shall be subjected to a completely automated run test on the assembly line. The data for each unit will be stored at the factory, and must be available upon request.
10. Unit shall be designed in accordance with UL Standard 1995, including tested to withstand rain.
11. Unit shall be constructed to prevent intrusion of snow and tested to prevent snow intrusion into the control box up to 40 mph.
12. Unit shake tested to assurance level 1, ASTM D4169 to ensure shipping reliability.

C. Delivery, Storage, and Handling:
1. Unit shall be stored and handled per manufacturer's recommendations.
2. Lifted by crane requires either shipping top panel or spreader bars.
3. Unit shall only be stored or positioned in the upright position.

D. Operating Characteristics:
1. Unit shall be capable of starting and running at 125°F (52°C) ambient outdoor temperature, meeting maximum load criteria of AHRI Standard 210/240 at ±10% voltage.
2. Compressor with standard controls shall be capable of operation down to 35°F (2°C), ambient outdoor temperatures. Accessory winter start kit is necessary if mechanically cooling at ambient temperatures down to 25°F (–4°C).
3. Unit shall discharge supply air horizontally and configured from horizontal return air.
4. Unit shall be factory configured for vertical supply and return configurations.

E. Electrical Requirements:

1. Main power supply voltage, phase, and frequency must match those required by the manufacturer.

F. Unit Cabinet:
1. Unit cabinet shall be constructed of galvanized steel, and shall be bonderized and coated with a pre-painted baked enamel finish on all externally exposed surfaces.
2. Unit cabinet exterior paint shall be: film thickness, (dry) 0.003-in. minimum, gloss (per ASTM D523, 60°F/16°C): 60, Hardness: H-2H Pencil hardness.
3. Evaporator fan compartment interior cabinet insulation shall conform to AHRI Standards 210/240 minimum exterior sweat criteria. -Interior surfaces shall be insulated with a

minimum 1/2-in. thick, 1 lb density, flexible fiberglass insulation, neoprene coated on the air side. Aluminum foil-faced fiberglass insulation shall be used in the heat compartment.

4. Base of unit shall have a minimum of four locations for thru-the-base gas and electrical connections (factory-installed or field-installed), standard.
5. Base Rail:
   a. Unit shall have base rails on a minimum of 2 sides.
   b. Holes shall be provided in the base rails for rigging shackles to facilitate maneuvering and overhead rigging.
   c. Holes shall be provided in the base rail for moving the rooftop by fork truck.
   d. Base rail shall be a minimum of 16 gauge thickness.
6. Condensate pan and connections:
   a. Shall be a sloped condensate drain pan made of a corrosion resistant material.
   b. Shall comply with ASHRAE Standard 62.
   c. Shall use a 3/4 in. 14 NPT drain connection, possible either through the bottom or side of the drain pan. Connection shall be made per manufacturer's recommendations.
7. Top panel:
   a. Shall be a single piece top panel on all sizes.
8. Electrical Connections:
   a. All unit power wiring shall enter unit cabinet at a single, factory prepared, knockout location.
9. Hinged Access Panels:
   a. Shall provide easy access through integrated quarter turn latches.
   b. Shall be on major panels of: filter, control box, fan motor, and compressor.

G. Coils:
1. Standard industry proven Aluminum Fin-Copper Tube Coils:
   a. Standard evaporator and condenser coils shall have aluminum lanced plate fins mechanically bonded to seamless internally grooved copper tubes with all joints brazed.
   b. Evaporator coils shall be leak tested to 150 psig, pressure tested to 450 psig, and qualified to UL 1995 burst test at 1775 psig.
   c. Condenser coils shall be leak tested to 150 psig, pressure tested to 650 psig, and qualified to UL 1995 burst test at 1980 psig.

H. Refrigerant Components:

1. Refrigerant circuit shall include the following control, safety, and maintenance features:
   a. TXV cooling metering system on all models shall include a multiple feed distribution system. Fixed heating orifice metering system and include a multiple feed distribution system that optimizes coil performance.
   b. Refrigerant filter drier - Solid core design.
   c. Service gauge connections on suction and discharge lines.
   d. Pressure gauge access through a specially designed access port in the top panel of the unit.
   e. Suction line accumulator to provide protection in all operating modes from cooling, heating and reverse cycle switching.
2. There shall be gauge line access port in the skin of the rooftop, covered by a black, removable plug.
   a. The plug shall be easy to remove and replace.
   b. When the plug is removed, the gauge access port shall enable maintenance personnel to route their pressure gauge lines.
   c. This gauge access port shall facilitate correct and accurate condenser pressure readings by enabling the reading with the compressor access panel on.
   d. The plug shall be made of a leak proof, UV-resistant, composite material.
3. Compressors:

a. Unit shall use fully hermetic, heat pump duty two stage scroll compressor on single circuit independent refrigeration circuit.
b. Compressor motors shall be cooled by refrigerant gas passing through motor windings.
c. Compressors shall be internally protected from high discharge temperature conditions.
d. Compressors shall be protected from an over-temperature and over-amperage conditions by an internal, motor overload device.
e. Compressor shall be factory mounted on rubber grommets.
f. Compressor motors shall have internal line break thermal, current overload and high pressure differential protection.
g. Crankcase heaters shall not be required for normal operating range, unless required by compressor manufacturer due to refrigerant charge limits.

I. Filter Section:
1. Filters access is specified in the unit cabinet section of this specification.
2. Filters shall be held in place by a pivoting filter tray, facilitating easy removal and installation.
3. Shall consist of factory installed, low velocity, throw-away 2-in. thick MERV 13 filters.
4. Filters shall be standard, commercially available sizes.
5. Only one size filter per unit is allowed.

J. Evaporator Fan and Motor
1. Direct Drive Evaporator fan motor:
   a. Shall be a ECM motor design.
   b. Shall have permanently lubricated bearings.
   c. Shall have inherent automatic-reset thermal overload protection.
   d. Shall have slow ramp up to speed capabilities.
   e. Shall require no fan/motor belts for operation, adjustments and or initial fan speed set up.
   f. Fan DC voltage set up on Unit Control Board can eliminate the need of removal of blower access door, required on conventional belt drive systems.
   g. Shall be internally protected from electrical phase reversal and loss.
2. Evaporator Fan:
   a. Shall be easily set with selection switch and adjustment pot on unit control board.
   b. Two stage cooling capacity control, the indoor fan speed is automatically controlled to meet the AHRI performance requirement with 75% low fan speed and 100% at full fan speed operation.
   c. Blower fan shall be a Vane Axial fan design with 75% less moving parts than a conventional belt drive system.
   d. Shall be constructed of a cast aluminum stator and high impact composite material on rotor and air inlet casing.
   e. Shall be a patented / pending design with a corrosion resistant material and dynamically balanced.
   f. Shall have slow ramp up to speed capabilities to help reduce sound and comfort issues typically associated with single speed belt drive systems.
   g. Shall be a slide out design with two screw removal.
3. Shall include an easily accessible Unit Control Board to conveniently and safely provide connection points for vital control functions such as: smoke detectors, phase monitor, economizer, thermostat, DDC control options, and low and high pressure switches. Controller shall also provide an intuitive means to adjust the indoor fan speed through a simple switch and pot adjustment design.

K. Condenser Fans and Motors:
1. Condenser fan motors:
   a. Shall be a totally enclosed motor.

b. Shall use permanently lubricated bearings.
c. Shall have inherent thermal overload protection with an automatic reset feature.
d. Shall use a shaft-down design on all sizes.

2. Condenser Fans:
   a. Shall be a direct-driven propeller type fan constructed of high impact composite material.
   b. Shall have high impact composite blades completely formed into one piece without blade fasteners or connectors and shall be dynamically balanced.

L. Sensors and Transmitters:
1. Thermostats:
   a. Thermostat must have capability to energize 2 stages of cooling, and 2 different stages of heating. All models have 2-stage cooling capabilities. Thermostats shall heat pump design and include capability for occupancy scheduling.
2. Indoor Air Quality (CO_2) Sensor:
   a. Shall be able to provide demand ventilation indoor air quality (IAQ) control.
   b. The IAQ sensor shall be available in duct mount, wall mount, or wall mount with LED display. The set point shall have adjustment capability.
3. Economizer controller shall accept a 2 to 10 vdc CO_2 sensor input for IAQ/DCV control. In this mode, dampers shall modulate the outdoor air damper to provide ventilation based on the sensor input.

M. Instrumentation and control devices
1. Complete with self-contained low-volt-age control circuit protected by a resettable circuit breaker on the 24–v transformer side. Transformer shall have 75VA capability. Two per unit.
2. Utilize color-coded wiring.
3. Include a Unit Control Board to conveniently and safely provide connection points for vital control functions such as: smoke detectors, phase monitor, economizer, thermostat, DDC control options, and low and high pressure switches. Controller shall also provide an intuitive means to adjust the indoor fan speed through a simple switch and pot adjustment design.
4. Unit shall include a minimum of one 8-pin screw terminal connection board for connection of control wiring.
5. Include integrated defrost system to prevent excessive frost accumulation during heating duty, and shall be controlled as follows:
   a. Defrost shall be initiated on the basis of time and coil temperature.
   b. A 30, 60, 90, 120 minute timer shall activate the defrost cycle only if the coil temperature is low enough to indicate a heavy frost condition.
   c. Defrost cycle shall terminate when defrost thermostat is satisfied and shall have a positive termination time of 10 minutes.
6. Defrost system shall also include:
   a. Defrost Cycle Indicator LED.
   b. Dip switch selectable defrost time between 30, 60, 90 and 120 minutes. Factory set at 30 minutes.
   c. Molded plug connection to ensure proper connection.
7. Safeties:
   a. Compressor over-temperature, over-current. High internal pressure differential.
8. Low pressure switch.
   a. Low pressure switch shall use different color wire than the high pressure switch. The purpose is to assist the installer and service technician to correctly wire and or troubleshoot the rooftop unit.
9. High pressure switch.
   a. High pressure switch shall use different color wire than the low pressure switch. The purpose is to assist the installer and service technician to correctly wire and or troubleshoot the rooftop unit.

10. Automatic reset, motor thermal overload protector.

2.2. MULTI-POSITION AIR HANDLING UNIT – FC-1 THRU FC-7

A. General
1. Vertical, horizontal left, horizontal right, or downflow air handling unit, operable with refrigerant R-410A, equipped with an electronic expansion valve and direct-drive ECM type fan with constant CFM programming
2. pre-painted heavy-gauge steel casing
3. Computerized PID control shall be used to control superheat to deliver a comfortable room temperature condition. The unit shall be equipped with a programmed drying mechanism that dehumidifies while limiting changes in room temperature

B. Indoor Unit:
1. Indoor unit components shall be completely factory assembled and tested. Included in the unit is factory wiring, piping, electronic proportional expansion valve, control circuit board, fan motor thermal protector, brazed connections, self-diagnostics, auto-restart function, 3-minute fused time delay, and test run switch.
2. Indoor unit and refrigerant pipes will be charged with dehydrated air prior to shipment from the factory.
3. Both refrigerant lines shall be insulated from the outdoor unit.
4. Return air shall be through a field supplied filter.
5. Condensate draining shall be made via gravity or external condensate pump.
6. The indoor unit will be separately powered with 208~230V/1-phase/60Hz.

C. Unit Cabinet:
1. The cabinet shall be constructed with sound absorbing, foil-faced insulation to control air leakage.
2. Select an installation location with adequate structural support, space for service access and clearance for air return and supply duct connections.
3. A field supplied secondary drain pan shall be installed.

D. Fan:
1. The fan shall be a direct-drive Sirocco type fan, statically and dynamically balanced impeller with high and low fan speeds available.
2. The fan motor shall operate on 208/230 volts, 1 phase, 60 hertz with a motor output range 0.2 to 1.0. HP.
3. The airflow rate shall be available in high setting.
4. The fan motor shall be thermally protected.
5. Fan motor external static pressure shall be up to 0.9” ESP. for nominal airflow:

E. Coil:
1. Coils shall be of the direct expansion type constructed from aluminum tubes expanded into aluminum fins to form a mechanical bond.
2. The coil shall be of a waffle louver fin and high heat exchange, rifled bore tube design to ensure highly efficient performance.
3. The coils shall be a 2- to 4-row cross fin copper evaporator coil with 14 to 16 fpi design completely factory tested.
4. The refrigerant connections shall be brazed connections and the condensate will be 3/4 inch outside diameter.
5. A thermistor will be located on the liquid and gas line.

F. Electrical:
1. A separate power supply will be required of 208/230 volts, 1 phase, 60 hertz. The acceptable voltage range shall be 187 to 253 volts.

2. Transmission (control) wiring between the indoor and outdoor unit shall be a maximum of 3,280 feet (total 6,560 feet).
3. Transmission (control) wiring between the indoor unit and remote controller shall be a maximum distance of 1,640 feet.

G. Control:
1. The unit shall have controls to perform input functions necessary to operate the system.
2. The unit shall come with BMS interface system via optional LonWorks or BACnet gateways.

H. Accessories:
1. Field installed electric heaters
2. Air filter
3. Downflow kit

2.3 HEAT PUMP CONDENSING UNIT – HP-1 THRU HP-7

A. General:
1. The outdoor unit shall be factory assembled and pre-wired with all necessary electronic and refrigerant controls. The refrigeration circuit of the condensing unit shall consist of a swing compressor, motors, fans, condenser coil, electronic expansion valves, solenoid valves, 4-way valve, distribution headers, capillaries, filters, shut off valves, oil separator, service ports and suction line accumulator. Liquid and suction lines must be individually insulated between the outdoor and indoor units.
2. The outdoor unit shall be wired and piped with outdoor unit access from the left, right, rear or bottom.
3. The system shall automatically restart operation after a power failure and will not cause any settings to be lost, thus eliminating the need for reprogramming.
4. The outdoor unit shall allow for side-by-side installation with minimum spacing.
5. The following safety devices shall be included on the condensing unit; high pressure switch, low pressure sensor, control circuit fuses, crankcase heaters, fusible plug, overload relay, inverter overload protector, thermal protectors for compressor and fan motors, over current protection for the inverter and anti-recycling timers.
6. To ensure the liquid refrigerant does not flash when supplying to the various indoor unit units, the circuit shall be provided with a sub-cooling feature.
7. Oil recovery cycle shall be automatic occurring 2 hours after start of operation and then every 8 hours of operation.
8. The outdoor unit shall be capable of heating operation at 0°F dry bulb ambient temperature without additional low ambient controls.

B. Unit Cabinet:
1. The outdoor unit shall be completely weatherproof and corrosion resistant. The unit shall be constructed from rust-proofed mild steel panels coated with a baked enamel finish.

C. Fan:
1. The condensing unit fan(s) shall consist of propeller type, direct-drive fan motors that have multiple speed operation via a DC (digitally commutating) inverter.
2. The fan shall be a horizontal discharge configuration.
3. The fan motor shall have inherent protection and permanently lubricated bearings and be mounted.
4. The fan motor shall be provided with a fan guard to prevent contact with moving parts.

D. Condenser Coil:
1. The condenser coil shall be manufactured from copper tubes expanded into aluminum fins to form a mechanical bond.
2. The heat exchanger coil shall be of a waffle louver fin and rifled bore tube design to ensure high efficiency performance.
3. The heat exchanger on the condensing units shall be manufactured from Hi-X seamless copper tube.
4. The fins are to be covered with an anti-corrosion acrylic resin and hydrophilic film type E1.

E. Compressor:
1. The inverter scroll compressor shall be variable speed (PAM inverter) controlled which is capable of changing the speed to follow the variations in total cooling and heating load as determined by the suction gas pressure as measured in the condensing unit. In addition, samplings of evaporator and condenser temperatures shall be made so that the high/low pressures detected are read every 20 seconds and calculated. With each reading, the compressor capacity shall be controlled to eliminate deviation from target value.
2. The inverter driven compressor in each condensing unit shall be of highly efficient reluctance DC (digitally commutating), hermetically sealed swing type.
3. Neodymium magnets shall be adopted in the rotor construction to yield a higher torque and efficiency in the compressor instead of the normal ferrite magnet type. At complete stop of the compressor, the neodymium magnets will position the rotor into the optimum position for a low torque start.
4. The capacity control range shall be 14% to 100%.
5. The compressor shall be equipped with a crankcase heater, high pressure safety switch, and internal thermal overload protector.
6. Oil separators shall be standard with the equipment together with an intelligent oil management system.
7. The compressor shall be mounted on vibration dampening rubber grommets to minimize the transmission of vibration, eliminating the standard need for external spring isolation.

F. Electrical:
1. The power supply to the outdoor unit shall be 208/230 volts, 1 phase, 60 hertz +/- 10%.
2. The control voltage between the indoor and outdoor unit shall be 18VDC non-shielded, stranded 2 conductor cable.
3. The control wiring shall be a two-wire multiplex transmission system, making it possible to connect multiple indoor units to one outdoor unit with one 2-cable wire, thus simplifying the wiring operation.
4. The control wiring lengths shall be 18 AWG, 2 wire, non-polarity, non-shielded, stranded

2.4 HIGH VELOCITY LOW SPEED OVERHEAD FANS – HVLS-1 THRU HVLS-8

A. Mounting System
1. The fan shall be equipped with a mounting plate, safety clips, wiring cover, and motor unit.
2. The mount shall be suitable for flat or sloped ceilings with heights ranging from 9–18 ft
3. The fan shall be equipped with a mounting bracket, wiring cover and trim, downrod assembly, motor cover, and motor unit.
4. The fan shall be available with a diameter of 60”.
5. The fan shall include one (1) 60” downrod.

B. Airfoils
1. The fan shall be equipped with six airfoils spanning a total diameter of 60”.

2. Airfoils shall be made of aircraft-grade aluminum.
   a. Airfoils shall be available in Oil-Rubbed Bronze
   b. Airfoils shall be suitable for indoor spaces.

C. Motor
1. The fan shall have an electronically commutated motor (ECM) rated for 100–277 VAC, single phase.
2. The fan shall be designed for continuous operation in ambient temperatures of 32–104°F and a humidity range of 20–90%.
3. The fan's motor unit and motor unit trim shall be available Oil-Rubbed Bronze finish.

D. Safety Cable
1. The fan shall be equipped with a safety cable that provides an additional means of securing the fan assembly to the building structure. The safety cable shall be 2.4 mm in diameter and fabricated of aircraft stainless steel.
2. Field construction of safety cables is not permitted.

E. Technology
1. The fan shall be equipped with Technology for smart automation and shall be able to wirelessly connect to local Ethernet networks or host a network. The fan's Wi-Fi capability shall permit over-the-air firmware updates.

F. Display and Sound
1. Changes to fan settings shall be confirmed with auditory feedback (a beep) and/or visual indication.

G. Remote Control
1. The fan shall be equipped with a compact Bluetooth remote control that allows intuitive operation of the fan speed and light brightness in the following modes:
   a. Fan speeds 0 (Off) through 7 (High)
   b. Auto Mode
   c. A 0–10 V module may be selected at the time of order. The module shall enable the fan to be integrated with a home or building automation system or a third-party 0–10 V dimmer using an industry-standard protocol.
2. The remote shall be 1.5" wide x 5.7" tall x 0.8" thick and shall operate on a CR 2450 3 V lithium battery (included).

H. 0–10 V Module
1. The fan shall be equipped with a 0–10 V module, as specified by the architect or owner.
2. The module shall be installed in the fan's heatsink.
3. The module shall provide independent control of fan speed and light intensity and shall support daisy chaining for one or up to 10 fans.
4. The module shall be compatible with any 0–10 V sinking/sourcing dimmer and with most home or building automation systems.

I. Wall Control
1. The fan shall be equipped with a Bluetooth wall control, as specified by the architect or owner.
2. The wall control shall allow intuitive operation of the fan speed and light brightness in the following modes:
   a. Fan speeds 0 (Off) through 7 (High)
   b. Auto Mode
3. The wall control shall be 1.77" wide x 4.25" tall x 1.69" thick.
4. The wall control shall be made from durable polycarbonate and shall feature backlight illumination and a white finish.

5. The wall control shall have an operating voltage of 100–277 VAC, 1Φ, 50/60 Hz and shall draw < 0.2 W.
6. The wall control shall provide control of up to four fans.
7. The wall control shall install to a wall junction box using standard AC wiring and shall require a dedicated circuit.

2.5 CEILING EXHAUST FANS – EF-3

A. General:
1. Base fan performance at standard conditions
2. Ceiling mounted applications
3. Maximum operating temperature is shall be
4. Sound level shall not exceed 4.0 sones
5. Fan shall be UL/cUL listed 507 - Electric Fans
6. Each fan shall bear a permanently affixed manufacture's nameplate containing the model number and individual serial number

B. Wheel:
1. Forward curved centrifugal wheel
2. Constructed of galvanized steel or calcium carbonate filled polypropylene
3. Statically and dynamically balanced in accordance to AMCA Standard 204-05

C. Motors:
1. Electronically Commutated Motor
   a. Motor enclosures: Open type
   b. Motor to be a DC electronic commutation type motor (ECM) specifically designed for fan applications. AC induction type motors are not acceptable. Examples of unacceptable motors are: Shaded Pole, Permanent Split Capacitor (PSC), Split Phase, Capacitor Start and 3 phase induction type motors
   c. Motors shall be permanently lubricated, heavy duty ball bearing type to match with the fan load and pre-wired to the specific voltage and phase.
   d. Internal motor circuitry to convert AC power supplied to the fan to DC power to operate the motor.
   e. Motor shall be speed controllable down to 20% of full speed (80% turndown). Speed shall be controlled by either a potentiometer dial mounted at the motor or by a 0-10 VDC signal
   f. Motor shall be a minimum of 85% efficient at all speeds.

D. Housing:
1. Constructed of heavy gauge galvanized steel
2. Interior shall be lined with 0.5 inches of acoustical insulation
3. Profile shall fit within roof and ceiling framing

E. Spring Loaded Aluminum Backdraft Damper:
1. Prevents air from entering back into the building when fan is off
2. Eliminates rattling or unwanted backdrafts

F. Outlet:
1. Type of outlet: Square to round
2. Field rotatable from horizontal to vertical discharge
3. Shall include an aluminum backdraft damper

G. External Electrical Accessories:
1. Eliminates removing the motor pack which saves time on installation

H. Mounting Brackets:

1. Fully adjustable for multiple installation conditions

I. Access Panel:
1. Once installed shall have easy access to internal components

J. Accessories:
1. Roof Discharge:
   a. Pitched Roof Cap - Steel construction with black enamel finish, integral flashing flange, built in birdscreen and damper

2.6 DIRECT DRIVE INLINE FAN – EF-4

A. General Description:
1. Base fan performance at standard conditions
2. Normal operating temperature up to 130 Fahrenheit
3. Applications include exhaust air systems
4. Each fan shall bear a permanently affixed manufacture's engraved metal nameplate containing the model number and individual serial number

B. Wheel:
1. Non-overloading, backward inclined centrifugal wheel
2. Constructed of Aluminum
3. Statically and dynamically balanced in accordance to AMCA Standard 204-05
4. The wheel cone and fan inlet will be matched and shall have precise running tolerances for maximum performance and operating efficiency
5. Single thickness blades are securely riveted or welded to a heavy gauge back plate and wheel cone

C. Motors:
1. Electronically Commutated Motor
   a. Motor enclosure: Open drip proof
   b. Motor to be a DC electronic commutation type motor (ECM) specifically designed for fan applications. AC induction type motors are not acceptable. Examples of unacceptable motors are: Shaded Pole, Permanent Split Capacitor (PSC), Split Phase, Capacitor Start and 3 phase induction type motors
   c. Motors are permanently lubricated, heavy duty ball bearing type to match with the fan load and pre-wired to the specific voltage and phase
   d. Internal motor circuitry to convert AC power supplied to the fan to DC power to operate the motor
   e. Motor shall be speed controllable down to 20% of full speed (80% turndown). Speed shall be controlled by either a potentiometer dial mounted at the motor or by a 0-10 VDC signal
   f. Motor shall be a minimum of 85% efficient at all speeds

D. Housing/Cabinet Construction:
1. Square design constructed of heavy gauge galvanized steel and shall include square duct mounting collars
2. Housing and bearing supports shall be constructed of heavy gauge bolted and welded steel construction to prevent vibration and to rigidly support the shaft and bearing assembly.
3. Galvanized Construction material

E. Housing Supports and Drive Frame:
1. Housing supports are constructed of structural steel with formed flanges
2. Drive frame is welded steel which supports the motor

F. Disconnect Switches:
   1. NEMA rated: NEMA 1: indoor application no water. Factory standard.
   2. Positive electrical shut-off
   3. Wired from fan motor to junction box

G. Duct Collars:
   1. Square design to provide a large discharge area
   2. Inlet and discharge collars provide easy duct connection

H. Access Panel:
   1. Two sided access panels, permit easy access to all internal components
   2. Located perpendicular to the motor mounting panel

I. Accessories:
   1. Dampers:
      a. Type: Gravity backdraft damper
      b. Galvanized frames with prepunched mounting holes
      c. Balanced for minimal resistance to flow

2.7 ROOFTOP INTAKE AIR GRAVITY VENTILATOR HOOD – IH-1 THRU IH-6

A. General Description:
   1. Ventilator is low silhouette for intake applications with natural gravity or negative pressure system
   2. Selection based on ducted applications
   3. Each fan shall bear a permanently affixed manufacture's nameplate containing the model number and individual serial number

B. Hood and Base:
   1. Material Type: Galvanized
   2. Hood Constructed of precision formed, arched panels with interlocking seams
   3. Vertical end panels are fully locked into hood end panels
   4. Base height is standard of 5 inches
   5. Curb cap is six inches larger then throat size
   6. Curb cap has pre-punched mounting holes for installation

C. Birdscreen:
   1. Constructed of ½ inch Aluminum mesh
   2. Mounted horizontally across the intake area of the hood

D. Hood Support:
   1. Constructed of galvanized steel and fastened so the hood can either be removed completely from the base or hinged open

E. Roof Curbs:
   1. General
      a. Sloped to match roof slope. Contractor to verify slope prior to ordering.
      b. Material: Galvanized
      c. Insulation thickness: 1 inches.
      d. Height: 14 inches
   2. Curb Seal:
      a. Rubber seal between fan and the roof curb
   3. Hood Insulation:
      a. Lined with ½ inch fiberglass insulation to prevent condensation and sound levels
   4. Insect Screen:

a. Constructed of fine mesh aluminum
b. Fitted to the top of the throat and prevents entry of insects
5. Tie-Down Points:
a. Four aluminum brackets located on hood supports, secures fan in heavy wind applications.

2.8 ROOFTOP EXHAUST OR RELEIF AIR GRAVITY VENTILATOR HOOD – RH-1 THRU RH-3

A. General:
1. Ventilator is low silhouette for relief applications with natural gravity or negative pressure system
2. Selection based on ducted applications
3. Each hood shall bear a permanently affixed manufacture's nameplate containing the model number and individual serial number

B. Hood and Base:
1. Material Type: Galvanized
2. Hood Constructed of precision formed, arched panels with interlocking seams
3. Vertical end panels are fully locked into hood end panels
4. Base height is standard of 5 inches
5. Curb cap is six inches larger then throat size
6. Curb cap has pre-punched mounting holes for installation

C. Birdscreen:
1. Constructed of ½ inch Aluminum mesh
2. Mounted horizontally across the intake area of the hood

D. Hood Support:
1. Constructed of galvanized steel and fastened so the hood can either be removed completely from the base or hinged open

E. Accessories:
1. Roof Curbs:
a. Sloped to match roof slope. Contractor to verify slope prior to ordering.
b. Material: Galvanized
c. Insulation thickness: 1 inches.
d. Height: 14 inches
2. Curb Seal:
a. Rubber seal between fan and the roof curb
3. Curb Seal:
a. Rubber seal between fan and the roof curb
4. Dampers:
a. Type: Gravity
b. Balanced for minimal resistance to flow
c. Galvanized frames with prepunched mounting holes
5. Hood Insulation:
a. Lined with ½ inch fiberglass insulation to prevent condensation and sound levels
6. Insect Screen:
a. Constructed of fine mesh aluminum
b. Fitted to the top of the throat and prevents entry of insects
7. Tie-Down Points:
a. Four aluminum brackets located on hood supports, secures fan in heavy wind applications

2.9 GENERAL

A. All materials, appliances, and equipment shall be new and best of their respective kinds, free from defects, and of the make, brand, or quality specified or as accepted by the Architect.

B. When two or more units of materials or equipment of the same type or class are required, these units shall be products of one manufacturer.

C. Apply and install all items in accordance with manufacturer's written instructions. Refer conflicts between manufacturer's instructions and the contract drawings and specifications to the Architect for resolution.

2.10 THERMOSTATS

A. Electric, solid-state, microcomputer-based room thermostat with the following features.
1. Automatic switching from heating to cooling.
2. Preferential rate control to minimize overshoot and deviation from set point.
3. Set up for four separate temperatures per day.
4. Instant override of set point for continuous or timed period from 1 hour to 31 days.
5. Short-cycle protection.
6. Programming based on every day of week.
7. Selection features include degree F or degree C display, 12- or 24-hour clock, keyboard disable, remote sensor, and fan on-auto.
8. Battery replacement without program loss.
9. Thermostat display features include the following:
   a. Time of day.
   b. Actual room temperature.
   c. Programmed temperature.
   d. Programmed time.
   e. Duration of timed override.
   f. Day of week.
   g. System mode indications include "heating," "off," "fan auto," and "fan on."

B. Thermostat Cover Construction: Heavy-duty, locking thermostat guard, of solid metal tamperproof construction.

C. Accuracy: Plus or minus 0.5 deg. F at calibration point.

D. Wire: Twisted, shielded-pair cable.

E. Contractor shall field verify dimensions prior to ordering fan and curb adaptor.

2.11 DUCTWORK

A. Sheet Metal Ductwork - Rectangular
1. Ducts and plenums shall be fabricated and installed in conformance with the latest editions of: NFPA Pamphlet No. 90A; California Building Code; California Mechanical Code and the SMACNA HVAC Duct Construction Standards (Metal and Flexible). Ducts and plenums shall be constructed of hot dipped galvanized mild steel and shall have airtight Class "B" seals at all transverse joints and longitudinal seams. Tables and figures hereinafter referenced are from the 2005 edition of the SMACNA HVAC Duct Construction Standards (Metal and Flexible).
2. Rectangular duct construction shall conform to Table 2-3. All transverse joints shall be flanged per Table 2-32, with corner closures or "Duct Mate" flanged connections with corner closures per Figure 2-17. Elbows shall be standard radius (Type RE 1) or square throat with vanes (Type RE 2) per Figure 4-2, with double thickness turning vanes per

Figures 4-3 and 4-4. Offsets and transitions shall be per Figure 4-7. Supply, return, and exhaust branch connections shall be per Figure 4-5 or 4-6. Splitters shall not be used.

3. Lined ducts shall be fabricated such that the net inside dimensions equals the duct sizes shown on the Drawings.

B. Sheet Metal Ductwork - Spiral

1. Round ducts shall be spiral, United McGill or equal. All transverse joints and longitudinal seams shall have Class “B” seals. All branches in round duct systems shall be made with factory fabricated reducing wye branches. Duct turns shall be made with standard, factory fabricated, three-piece elbows.

C. Flexible Ductwork

1. Flexible ducts shall be Flexmaster “8M” or approved equal. Flexible ducts shall be used only where shown on the Drawings, and maximum length of any given flexible duct shall not exceed 5 ft. Galvanized sheet metal elbows shall be used for turns greater the 45° on flexible ducts 10” and larger. Connections to rectangular ducts shall be made with “spin-in” fittings with air scoops. The installation of flexible ducts shall conform to Figure 3-10, with the exceptions noted herein.

D. Supports

1. Supports for horizontal ducts and plenums shall be fabricated per Figures 5-5 and 5-6 and Tables 5-1, 5-2, and 5-3. The maximum distance between hangers shall be eight feet for rectangular ducts and twelve feet for round ducts. Attachments to the structure shall be made with adequately sized lag bolts for straphangers and adequately sized machine bolts and side beam brackets for rod hangers. Supports for vertical ducts shall be band iron strap or angle bracket type per Figure 5-8 and 5-9.

E. Specialties:

1. Duct Access Doors: Including those for removing filters, duct access doors shall be as detailed in Figure 7-2 with sash locks, piano hinges, and gaskets. Access doors shall have an unobstructed full swing.

2.12 IDENTIFICATION FOR MECHANICAL SYSTEMS

A. Labels

1. Vinyl Wraparound Labels: Preprinted, flexible labels laminated with a clear, weather- and chemical-resistant coating and matching wraparound clear adhesive tape for securing label ends.
2. Snap-around Labels: Slit, pre-tensioned, flexible, preprinted, color-coded acrylic sleeves, with diameters sized to suit diameters and that stay in place by gripping action.
3. Self-adhesive Wraparound Labels: 3-mil-thick, polyester flexible label with acrylic pressure-sensitive adhesive.
   a. Self-Lamination: Clear; UV-, weather- and chemical-resistant; self-laminating, protective shield over the legend. Labels sized such that the clear shield overlaps the entire printed legend.
   b. Marker for Labels: Machine-printed, permanent, waterproof, black ink recommended by printer manufacturer.
4. Self-Adhesive Labels: Polyester, thermal, transfer-printed, 3-mil-thick, multicolor, weather- and UV-resistant, pressure-sensitive adhesive labels, configured for intended use and location.
   a. Minimum Nominal Size:
      i. 3-1/2 by 5 inches for equipment.
      ii. As required by authorities having jurisdiction.

2.13 DUCTWORK ACCESSORIES

A. Flexible Duct Connections
   1. Duro-Dyne “Metal-Fab” with Duroion, Ventfabrics “Ventglass,” or approved equal.
   2. Install at each point where a blower unit is connected to a duct. A minimum clearance of three inches between the duct and the source of vibration shall be maintained. Install per Figure 2-17.

B. Screens
   1. Install removable bird screens at all outside intakes and exhaust air discharges. Screens shall be fabricated from ½” x 14 gauge mesh secured in full frames. Screens and frames shall be constructed of the same material as the duct, hood, or equipment to which attached.

C. Joints
   1. Tape all joints airtight using Hardcast type “DT” pressureless tape and “HD-20” adhesive, per manufacturer’s directions.

D. Dampers

   1. Provide butterfly or multi-blade dampers where indicated on the Drawings or as required for balancing air quantities to values shown without generating excessive noise. Provide Duro-Dyne “KS-385,” or approved equal, locking quadrants on each manual damper. Locate dampers in furred ceilings near access panels where possible.
      a. Butterfly dampers shall be constructed as per Figure 7-4, Figure A, B, and C in the duct manual.
      b. Multi-blade dampers shall conform to Figure 7-5.
      c. Back-draft dampers shall be Air Balance “Air Dynamic” model DY-1002-V, or equal.

2.14 INSULATION

A. Exterior of Ductwork:
   1. Unless specified to be lined, all sheet metal supply and return ducts in indirectly conditioned spaces shall be insulated on the outside with Johns Manville “Microlite XG” flexible fiberglass blanket-type duct wrap, with factory applied FSK aluminum foil facing, with a composite UL rating of 25/50, minimum R-6 installed.
   2. Unless specified to be lined, all sheet metal supply and return ducts in unconditioned spaces shall be insulated on the outside with Johns Manville “Microlite XG” flexible fiberglass blanket-type duct wrap, with factory applied FSK aluminum foil facing, with a composite UL rating of 25/50, minimum R-8 installed.
   3. All outside air ductwork between building outside air inlet and HVAC unit or heat/energy recovery ventilator shall be insulated on the outside with Johns Manville “Microlite XG” flexible fiberglass blanket-type duct wrap, with factory applied FSK aluminum foil facing, with a composite UL rating of 25/50, minimum R-4 installed.
   4. Exhaust ductwork within 10 feet of termination point and between any heat/energy recovery ventilator and exhaust termination shall be insulated on the outside with Johns Manville “Microlite XG” flexible fiberglass blanket-type duct wrap, with factory applied FSK aluminum foil facing, with a composite UL rating of 25/50, minimum R-4 installed.

B. Interior of Ductwork:
   1. Duct lining shall be installed in supply and return ducts and plenums where noted on the Drawings. Lining shall be Johns Manville “PermacoteLinacoustic R” rigid fiberglass board for plenums and “PermacoteLinacoustic HP” fiberglass duct liner for ducts, 1” thick, unless otherwise noted, with fire resistant coating. Duct liner shall meet ASTM C 1071, with air surface coated with acrylic coating treated with EPA registered anti-microbial agent prove to resist microbial growth as determined by ASTM G 21 and G 22.

Insulation with torn or broken coating shall be removed and replaced. Loose corners, edges, and butt joints will not be accepted.

2. All exposed exterior supply and return ductwork shall have minimum 2” interior insulation, as specified in this section.
3. Maximum velocity: 5,000 ft/min.
4. Fasteners: duct liner galvanized steel pins, welded or mechanically fastened.
5. Developed smoke density shall not exceed 50. Flame spread rating shall not exceed 25.

2.15 REFRIGERATION PIPING AND APPURTENANCES

A. Refrigerant piping shall be Type “ACR” de-oxidized hard temper copper tube, ASTM B280.

B. Mechanical joints on refrigerant piping systems are prohibited. All refrigerant piping joints shall be brazed. Use lead-free, silver solder, minimum 15% silver content.

C. Pipe fittings shall be wrought-copper with soldered joints, ASME B16.22.

D. Flexible connections shall be bronze, double braided, sweat solder ends.

E. Moisture/liquid indicators (sight glasses) shall be color change moisture indication type, replaceable element, filter screen and pad, sweat solder ends; Sporlan “See-All”, Henry, or equal.

F. Charging and purge valves shall be forged brass, diaphragm packless, globe type, angle or straight through, one end solder, one end flare; Henry 623 and 643 series, Sporlan or equal.

G. Solenoid valves shall be forged brass, extended end connections, solder ends, molded coil; Sporlan “E” series or equal. Comply with ARI 760 & UL 429.

H. Filter driers shall be replaceable media, angle type; Henry “Dri-Cor” or equal; ARI 730.

I. Thermsotatic expansion valves shall have forged brass body, stainless steel seats and pins, ODF solder connections, external equalizer,; ARI 750.

J. Outdoor condensing units shall have a flexible piping section at the outdoor unit.

K. Refrigerant piping between the outdoor unit and the individual fan coil (split system) or branch selector box (VRF system) shall be Type “ACR” de-oxidized hard temper copper tube, ASTM B280.

L. Refrigerant piping (exposed) between the indoor branch selector boxes and the individual fan coil in exposed areas shall be Type “ACR” de-oxidized hard temper copper tube, ASTM B280.

M. Refrigerant Piping shall be insulated with 1” wall thickness “Armacell AP Armaflex” black flexible closed-cell elastomeric thermal insulation in tubular form with self-seal system reinforced with lap seal tape.

N. Refrigerant piping (concealed) between the indoor branch selector boxes and the individual air handling units may be pre-insulated line sets, IsoClima or equal. Pre-insulated with expanded polyethylene sheath, closed cell with external LDPE foil. Piping shall be crimped closed for safety. Tested in accordance with UL94 for Surface

Burning Characteristics, UL723A for Flame/Smoke Index and UL746A for Ignition Resistance. Copper shall be ASTM B280 approved.

2.16 REGISTERS, GRILLES, AND DIFFUSERS

A. Air terminals shall be Titus, equivalent Nailor, or approved equal, as scheduled on the Drawings.

B. All terminals shall be steel and shall be factory painted “off-white,” unless otherwise noted. Air terminals for installation in gypsum board shall have a 1” border for surface mounting.

2.17 ACCESS PANELS

A. Where construction is not inherently accessible, provide adequately sized and conveniently located access doors in ceilings, walls, and furring for servicing valves, equipment, etc. Doors shall be delivered to the General Contractor for installation.

B. Fire Rated: Inryco/Milcor, U.L. listed, “B” label, 1 ½ hour rating. Minimum size shall be 12” x 12”. Provide larger sizes where required. Locks shall be flush screwdriver operated.

C. Drywalled Surfaces: Inryco/Milcor, Style DW, prime coated steel. Minimum size shall be 12” x 12”. Provide larger sizes where required. Locks shall be flush screwdriver operated.

D. Concrete and Tiled Surfaces: Inryco/Milcor, Style M, prime coated steel, except access panels installed in tiled surfaces shall be stain finish stainless steel. Minimum size shall be 12” x 12”. Provide larger sizes where required. Locks shall be flush screwdriver operated.

E. Plastered Surfaces: Inryco/Milcor, Style K, prime coated steel. Minimum size shall be 12” x 12”. Provide larger sizes where required. Locks shall be flush screwdriver operated.

PART 3 – EXECUTION

3.1 INSTALLATION, GENERAL

A. Provide all necessary cutting in connection with the work of the Section. No cutting shall be done without the approval of the Architect. Comply with requirements specified in Cutting and Patching Section.

B. No structural members shall be drilled, bored, or notched in a manner that will impair their structural capacity.

C. All penetrations of concrete or masonry shall be made with core drills.

3.2 EQUIPMENT STARTUP

A. Notify the Owner’s representative a minimum of two weeks prior to equipment startup date to allow for Owner’s personnel to be present during startup.

B. Manufacturer must provide a service technician to supervise rigging of the units to ensure proper fit.

C. Unit must be checked out, tested and placed into operation by the installing contractor under the supervision of an authorized representative of the factory.

D. Controls contractor must be present during startup to ensure that factory-installed controls have been adequately installed, wired, and integrated into the building managements system.

E. Provide minimum eight (8) hours of training time with Owner's maintenance personnel to thoroughly review new equipment, maintenance requirements, and equipment controls.

F. During startup, the full functionality of the equipment shall be demonstrated to the satisfaction of the Owner's representative, including heating, mechanical cooling, economizer cooling, zone modulation, and all emergency shutdown features.

3.3 EQUIPMENT, GENERAL REQUIREMENTS

A. Equipment shall operate quietly and without objectionable vibration. Such problems, other than from equipment operating at optimum conditions, shall be the Contractor's responsibility and shall be eliminated at the direction of the Architect.

B. Install equipment to provide good appearance, easy access, and adequate space to allow replacement and maintenance. Provide bases, supports, anchor bolts, and other items required to achieve this. Installation shall be level, above moisture level, and adequately braced.

C. Thoroughly lubricate equipment before operating. Repair of damage resulting from failure to comply with this requirement shall be the Contractor's responsibility.

D. Connections to piping shall be secured and properly aligned and all utility and control connections shall be properly isolated from the building structure by means of vibration isolators and flexible connections. Any equipment not meeting this requirement will be modified and reinstalled at no expense to the Owner.

E. Move equipment into building through available openings. Dismantle equipment where necessary to accomplish this. After reassembly, test equipment to verify its satisfactory operating condition.

3.4 DUCTWORK

A. All ductwork shall be installed within spaces provided where possible. Ducts shall be installed true to line and grade, fully secured to structural faming with specified hangers and supports, insulated, and vibration isolated, where required.

B. Each section of supply air ductwork shall be cleaned at the shop, dust and oil free, using a degreasing agent and detergent and sealed airtight at both ends with visqueen and tape. Supply ducts shall be additionally cleaned with a disinfecting solution. Ends of all supply and internally insulated exhaust dusts shall be kept sealed until the time they are jointed. When duct sections are joined, wipe down all interior surfaces with a clean tack cloth. If tack cloth shows any dust, then re-clean duct as described above. The intent is that no foreign matter be allowed to enter the ductwork at any time after factory cleaning and during construction.

3.5 CONTROLS

A. This Contractor shall provide all required control components, including but not limited to thermostats, temperature sensors, static pressure sensors, humidity sensors, damper actuators, valve actuators, unitary controllers, relays, and low-voltage wiring, such that the Owner is provided with a fully functional control system.

B. Where work is performed in an existing building, this Contractor shall integrate all control modifications into the existing building control system, if applicable. Specific requirements shall be coordinated with Owner and approved by Architect prior to installation.

C. Installation of the system shall be made under the supervision of the manufacturer of the equipment, or his factory authorized representative.

D. In addition to the submittals required above, and those set forth in "Submittals," the following items shall be furnished.
   1. In an existing building, this Contractor shall furnish a document that describes the proposed materials methods for integration into the existing building management system, if applicable.
   2. Prior to final inspection, the system contractor shall furnish a letter stating that the entire control system and all interlock wiring is installed and operating in a satisfactory manner.

3.6 THERMOSTAT

A. Room thermostats shall be installed in the locations indicated on the Contract Drawings. Final locations shall be coordinated with Owner's maintenance personnel and shall be installed in locations which shall provide representative temperatures for the adjacent areas.

B. Low voltage control wiring and conduit shall be installed in accordance with requirements of Division 26.

3.7 INSULATION

A. Exterior Ductwork:
   1. The insulation shall be cut longer than the perimeter of the duct to provide 2" staple lap and minimum compression at the corners. All joints shall be lapped 2' and stapled with outward clinching staples 2" on center. The insulation shall be mechanically fastened to the underside of all ducts 24" wide or more using cup-head pins, weld pins, or stick pins with speed clips 18" on center. All joints and penetrations of the vapor barrier jacket shall be sealed with a minimum 3" wide matching pressure sensitive tape. Pressure-sensitive tape shall be firmly rubbed in place immediately after application using a "squeegee" type tool.
   2. When a vapor seal is required, two coats of vapor retarder mastic reinforced with one layer of 4" wide, open weave glass fabric may be used in lieu of pressure-sensitive tape. Mastic shall be brushed onto joint and glass fabric until the fabric is filled. Mastics shall be applied in accordance with application instructions on the container.

B. Interior Duct Liner
   1. Apply to the inside face of ducts, coated side facing air stream, fasten using fire retardant adhesive meeting ASTM C 9169, and secure with mechanical liner fasteners at 24" maximum o.c., both directions. Pin length should be such as to limit compression of liner.
   2. Exposed edges must be factory or field coated. For systems operating at 4000 fpm or higher, a metal nosing must be installed on all liner leading edges. Insulation with torn or broken coatings shall be removed or replaced. Loose corners, edges, and butt joints will not be accepted.

C. Refrigerant Piping
   1. The insulation shall be installed in accordance with the manufacturer's instructions. All joints and seams shall be sealed with waterproof vapor retardant adhesive. All pipes exposed to the weather shall be coated with aluminum jacketing to protect the insulation from ultra-violet radiation in accordance with the manufacturer's published instructions.

3.8 SUPPORTS AND HANGERS

A. All hangers, supports, and attachments to the structure must be capable of withstanding three times the anticipated load.

3.9 TEST, INSPECTIONS

A. Make all necessary control adjustments and balancing of air and water flows. Operate the entire system for a period of time not less than three (3) working days for the purpose of proving satisfactory performance. During this period, instruct such persons as the Owner and/or Architect may designate in the proper operation of the systems. Should further adjustment prove necessary, operating tests shall be repeated until a satisfactory test is obtained.

B. This Contractor shall not allow or cause any work of this Section to be covered or enclosed until it has been inspected, tested, and approved by the Architect and the authorities having jurisdiction over the work. Should any of this work be enclosed or covered up before such inspection, testing, and approval, this Contractor shall uncover the work, have the necessary inspections, tests, and approvals made and, at no expense to the Owner, make all repairs necessary to restore both his work and that of other contractors which may have been damaged to be in conformity with the Contract Documents.

3.10 CLEANUP

A. Upon completion of the work of this Section, remove all material, debris, and equipment associated with or used in the performance of this work.

END OF SECTION

SECTION 23 05 93

TESTING ADJUSTING BALANCING

PART 1 GENERAL

1.1 SCOPE

A. Provide all supervision, personnel, instruments, calibration, equipment, and all other materials necessary to perform balancing and testing, and compile test data including calculations and services necessary for the heating, ventilating, and air conditioning systems for this project, all in accordance with the project Drawings and Specifications and as specified herein.

1.2 GENERAL

A. Mechanical Contractor will employ a Testing, Adjusting, and Balancing (TAB) Agency that is certified by Associated Air Balancing Council (AABC), National Environmental Balancing Bureau (NEBB), or Testing, Adjusting, and Balancing Bureau (TABB).

B. The TAB agency must also be an approved Acceptance Test Employer with Acceptance Test Technicians (ATT). The ATT will be responsible for performing all required acceptance testing and associated forms.

C. The TAB Agency shall be responsible for inspecting, balancing, adjusting, testing, and logging the data of the performance of fans, all dampers in the duct systems, all air distribution devices, and the flows of air through all coils.

D. Existing equipment, unless specifically mentioned otherwise, shall not in the scope of the TAB work.

E. A completely operable system shall be placed into operation each day during testing and balancing.

F. The TAB Agency shall utilize instrumentation which meets the requirements of ASHRAE 111, Section 5, “Instrumentation”.

G. The Mechanical Contractor shall be responsible for certifying in writing that the system, as scheduled for balancing, is operational and complete. Completeness shall include not only the physical installation, but the Mechanical Contractor’s certification that the prime movers are installed in good working order, and that full load performance has been preliminary tested under the certification of the Mechanical Contractor. Before any testing and balancing is started, a complete report shall be sent to the TAB Agency by the Mechanical Contractor.

H. The Mechanical Contractor shall be responsible for making all modifications to recertify discrepancies reported by the TAB Contractor as indicating non-compliance with the Contract Documents. By completing the work on time, the Mechanical Contractor shall provide sufficient time before the completion date so that balancing can be accomplished.

I. If construction deficiencies are encountered which preclude obtaining optimum conditions, the deficiencies will be recorded and given to the Owner’s representative. The TAB Agency is advised that deficiencies in the HVAC construction are often encountered during final TAB

services, and should include in the bid an amount deemed advisable to compensate for time in identifying the deficiencies.

1.3 SERVICES

A. The TAB Agency will balance, test, and adjust the systemic components to obtain optimum conditions in each conditioned space in the building. If construction deficiencies are encountered which preclude obtaining optimum conditions, the deficiencies will be recorded and given to the Owner's representative. The TAB Agency is advised that deficiencies in the HVAC construction are often encountered during final TAB services, and should include in the bid an amount deemed advisable to compensate for time in identifying the deficiencies.

B. The report shall be complete with logs, data, and records as required herein and all logs, data, and records shall be typed, produced, on white bond paper, and bound. Transmit four copies directly to the Owner's Representative to be distributed to the Mechanical Contractor, Controls Contractor, Engineer, and record file.

C. The report shall contain the following general data in a format selected by the TAB Agency for clarity and ease of reference.
   1. Project Title.
   2. Project Location.
   3. Project Architect (Firm name and address).
   4. Project Mechanical Engineer (Name).
   5. TAB Field Test Engineer (Name).
   6. TAB Agency (Firm name and address).
   7. Inclusive dates tests were performed and date of report.
   8. Calibration Certificates of each instrument used along with specific ID numbers (i.e., serial numbers).

1.4 SUBMITTALS

A. Submittal No. 15950 (1) – TAB Agenda
   1. The TAB Contractor shall submit a complete agenda, which shall outline in full the testing methods and locations for each HVAC system and/or device that is within the scope of the TAB work. The agenda shall represent the total system balance report, less field test data. Areas of intended field test inputs shall be represented by fully labeled blank spaces.
   2. The TAB Agenda shall also indicate the proposed test methods, instrumentation devices and all applicable calibration certificates.

B. Submittal No 15950 (2) – TAB Report
   1. Provide Test and Balance Report as indicated herein.

1.5 AIR SYSTEMS REQUIREMENTS

A. In addition to the above data in its appropriate format, the Test and Balance Report shall include the following data:
   1. Packaged Rooftop Units, Makeup Air Units and Ducted Fan Coils
      a. Manufacturer and model.
      b. Size.
      c. Motor hp, voltage, phase, cycles, full load amps.
      d. Location and local identification data.
      e. Identification tag listed in schedules on drawings and specifications.
      f. Supply, return and outside airflow (cfm)
      g. Fan RPM.

h. Motor current readings at each fan.
i. Inlet and outlet static pressure from supply fan and exhaust fan (if applicable). These readings shall be related to the fan curve.
j. Static pressure differential across each coil and filter section.
k. Entering air and leaving air temperatures (DB/WB) in 100% cooling mode.
l. Entering air and leaving air temperatures (DB) in 100% heating mode.
m. Outdoor air percentage setting.
n. Outdoor airflow in economizer mode (if applicable).
o. Outdoor airflow in demand control ventilation mode (if applicable).

2. Exhaust Fans
   a. Manufacturer and model.
   b. Size.
   c. Motor hp, voltage, phase, cycles, full load amps.
   d. Location and local identification data.
   e. Identification tag listed in schedules on drawings and specifications.
   f. Exhaust airflow (cfm).
   g. Fan RPM.
   h. Motor current readings at each fan.

PART 2 – PRODUCTS (not used)

PART 3 – EXECUTION

3.1 GENERAL PROCEDURES

A. During the balancing, the temperature regulation shall be adjusted for proper relationship between controlling instruments and calibrated. The correctness of the final setting shall be proved by taking hourly readings for a period of one successive 8-hour day, in a typical room on each separately controlled zone, after tenant moves in. The total variation shall not exceed 2 degrees from the preset medium temperature during the temperature survey period. (This will be done only on systems that are totally operational).

3.2 AIR SYSTEMS PROCEDURES

A. The TAB Agency shall perform the following tests and balance the air systems in accordance with the following requirements:
   1. Test and adjust blower and motor rpm to design requirements.
   2. Test and record motor full load amperes and corresponding voltage.
   3. Make pitot tube traverse of main supply ducts and obtain design cfm at fans.
   4. Test and record system static pressures, suction and discharge.
   5. Test and adjust system for design cfm of outside air.
   6. Test and record entering and leaving air dry bulb temperatures of all heating and cooling coils.
   7. Test and record entering and leaving wet bulb temperatures of all cooling coils.
   8. Adjust all main supply and return air ducts to proper design cfm. System supply airflow, system return airflow, and system outdoor airflow shall be balanced to within 5% of the design requirement.
   9. Adjust all zones to proper design cfm, supply and return.
   10. Test and adjust each diffuser, grille, and register to within 10% of design requirement.
   11. Each grille, diffuser, and register shall be identified as to location and area.
   12. Size, type, and manufacturer of diffusers, grilles, registers, and all tested equipment shall be identified and listed. Manufacturer's ratings on all equipment shall be used to make required calculations.

13. Readings and test of diffusers, grilles, and registers shall include required fpm velocity and test resultant velocity, required cfm and test resultant cfm after adjustments.
14. TAB Agency shall check all controls to ensure they are operating as specified. Provide the control contractor with specific set points.

3.3 TEMPERATURE CONTROL SYSTEM

A. In the progress of performing the TAB work, the TAB Agency shall:
1. Work with the Controls Contractor to ensure the most effective total system operation within the design limitations, and to obtain mutual understanding of intended control performance.
2. Verify that all control devices are properly connected.
3. Verify that all dampers, valves, and other controlled devices are operated by the intended controller.
4. Verify that all dampers and valves are in the position indicated by the controller (open, closed, or modulating).
5. Verify that the integrity of valves and dampers in terms of tightness of close-off and full-open position. This includes dampers in multi-zone units.
6. Check that all valves are properly installed in the piping system in relation to direction of flow and location.
7. Verify the calibration of all controllers.
8. Verify the proper application of all normally open and normally closed valves.
9. Check the locations of all thermostats and humidistats for potential erratic operation from outside influences such as sunlight, drafts, or cold walls.
10. Check the locations of all sensors to determine whether their position will allow them to sense only the intended temperatures or pressures of the media. Controls Contractor will relocate as deemed necessary by the TAB Agency.
11. Check the sequence of operation for any control mode is in accordance with approved shop drawings. Verify that only minimum simultaneous heating and cooling occurs. Observe that heating cannot take place until the cooling zone of valve is completely closed.
12. Verify that all controller set points meet the design intent.
13. Check all dampers for free travel.
14. Verify the operation of all interlock systems.
15. Perform all system verification to assure the safety of the system and its components.

B. A systematic check of the above requirements shall be included in the final TAB report.

3.4 DUCT LEAKAGE TEST

A. All supply, return, exhaust, and outside air ductwork shall be tested for leaks, using necessary instruments before insulating any ductwork.

B. Ductwork shall be leak-tested in accordance with SMACNA HVAC Air Duct Leakage Test Manual. Representative sections totaling not less than 10 percent of the total installed duct area shall be tested. Where the tested 10 percent fails to comply with the requirements of this section, then 40 percent of the total installed duct area shall be tested. Where the tested 40 percent fails to comply with the requirements of this section, then 100 percent of the total installed duct area shall be tested.

C. The maximum permitted leakage shall be determined in accordance with CMC 603.10.1.

D. The test and balance report shall include the results of the duct leakage test for the engineer's review.

3.5 TEST AND BALANCE REPORT

A. The report shall contain the following data:
   1. A listing of the measured air quantities at each outlet corresponding to the temperature tabulation specified above.
   2. Air quantities at each return and exhaust air handling device (only if ducted return systems).
   3. Static pressure readings entering and leaving each supply, return and exhaust fan, filter, and coil of the system. These readings shall be related to fan curves in terms of cfm handled.
   4. Motor current readings at each fan. The voltages at the time of the readings shall be listed.

3.6 FINAL ACCEPTANCE

A. At the time of final inspection, the Balancing Agency shall recheck, in the presence of the Owner's Representative, specific and random selections of data, i.e., air quantities, recorded in the Certified Report.

B. Points and areas for recheck shall be selected by the Owner's Representative.

C. Measurement and test procedures shall be the same as approved for work forming basis of Certified Report.

D. Selections for recheck, specific plus random, will not normally exceed 25% of the total number tabulated in the report, except that special air systems may require a complete recheck for safety reasons.

E. If random tests elicit a measured flow deviation of 10% or more from that recorded in the Certified Report on 10% or more of the selected recheck stations, the report shall be automatically rejected. In the event the report is rejected, all systems shall be readjusted and tested, new data recorded, new Certified Report submitted, and new inspection tests made, all at no additional cost to the Owner.

F. Following final acceptance of the Certified Report by the Owner's Representative, the settings of all valves, splitter, dampers, and other adjustment devices shall be permanently marked by the TAB Agency, so that adjustment can be restored if disturbed at any time. Devices shall not be marked until after final acceptance.

END OF SECTION

SECTION 23 09 00

CONTROLS

PART 1 – GENERAL

1.1 WORK INCLUDED

A. Control systems shall be exclusively Johnson Controls as part of Tehama County Standards. No other substitutions are acceptable.

B. Furnish all labor, materials, equipment, and service necessary to modify the existing energy management system (EMS) for a complete and operative new EMS system, utilizing Direct Digital electronic controls as shown on the Drawings and as specified herein.

C. All labor, material, equipment, and software necessary to meet the listed functions of the EMS as specified herein and as shown on the Drawings shall be included.

D. Refer to Section 26 for power wiring to line voltage devices.

E. Control wiring, except for power wiring, necessary for temperature control systems is covered in this Section.

1.2 RELATED WORK SPECIFIED ELSEWHERE

A. Section 26 – Electrical

1.3 SUBMITTALS REQUIRED FOR THIS SECTION

A. Submittal requirements are set forth in Section 26, ELECTRICAL.

B. The requirements covered in this Section are in addition to requirements of Section 26.

C. Submittals shall be configured to meet or exceed the requirements of both sections.

D. Submittal packages shall be assembled as listed below:
1. Initial submittal.
2. Testing submittals.
3. Operation and maintenance manuals.

E. Initial Submittal:
1. Prior to fabricating or shipping any material, submit the following information and documentation. This package shall be stand-alone and shall be suitable for forwarding by the Contractor to the Fire Marshal following approval by the Engineer. Include the following:
   a. Table of contents.
   b. Description of project. Include location/address; Owner's name and telephone number; and contractor's name, address, and telephone number.
   c. Complete components list showing quantities, descriptions, manufacturers, model numbers, and chose options.
   d. Manufacturer's specification sheets on all equipment.
   e. Building floor plan(s) showing all devices, zoning, and room identification.

f. Interconnection diagram which shows all components and interconnecting wire and conduit, including links to Local Area Networks and telephone connections. If the submitted configuration departs from the conduit and wire layout on the Plans, review of the configuration shall not obligate the Owner to additional costs.
g. Point-to-point wiring diagram for all items within panel(s).
h. Panel layout drawings.
i. Symbol legend for devices shown on submitted Drawings.
j. Identification of type of wiring used.
k. Details on support and anchorage of equipment.
l. Details on installation of temperature control devices.
m. Detailed Drawing(s) showing conduit penetrations of fire walls, if any.
n. Manufacturer's installation instructions.

F. Testing Submittals:
1. Testing submittals are required, as specified later in this Section.

G. Operation and Maintenance Manuals
1. Operation and Maintenance Manual submittals are required, as specified later in this Section.

H. Should any item be included which deviates from these Specifications, the deviation shall be clearly indicated and explained at the time of submittal.

I. Submittals shall be complete, neat, orderly, and indexed. The Contractor shall check submittals for number of copies, adequate identification, correctness, and compliance with the Drawings and Specifications, and shall initial all copies.

J. Revise and resubmit all submittal information until acceptable to the Engineer.

1.4 STARTUP, OPERATING, AND MAINTENANCE SERVICE

A. The manufacturer's field services representative shall furnish technical direction as required to ensure proper startup, operation, and maintenance of the equipment.

B. Operation and maintenance training of the Owner's staff shall be provided. Not less than 4 hours of training shall be provided at times convenient to the Owner.

1.5 SPARE PARTS

A. Provide the following spare equipment:
1. Ten fuses of each type used.

1.6 OPERATION AND MAINTENANCE MANUALS

A. Operation and maintenance manuals shall meet the requirements of Section 26, in addition to the requirements below:
1. Provide five copies of operation and maintenance manuals. Including the following:
a. Corrected submittals as required herein.
b. Record (as-built) wiring diagrams and equipment drawings.
c. For all equipment suppliers, list of current names, addresses, telephone numbers of those who should be contacted for service, information, and assistance.
d. Record (as-built) Contract Drawings marked with red pencil to show work revisions and also raceway and cable where different from the original Drawings. Prepare by obtaining new, clean sets of Contract Drawings from the Engineer, and pay all costs for same. Each manual set shall have original red pencil marks (not copies).
e. Test reports.

B. Material shall be clean and filed under dividers with headings in accordance with the specification item title.

1.7 WARRANTY

A. The work and materials covered in this Section shall be guaranteed for a period of 1 year from the date of acceptance thereof against defective material, design, and workmanship.

PART 2 – PRODUCTS

2.1 SYSTEM, GENERAL

A. All components used shall be serviceable, repairable, and replaceable by qualified temperature control technicians using nonproprietary parts, tools, and instruments.

2.2 TEMPERATURE CONTROL MATERIAL

A. Electric Damper Actuators
1. Electric damper actuators shall be gear or hydraulic type as scheduled.
2. Actuators shall be properly sized to provide sufficient torque to position the damper throughout its operating range.
3. Spring return actuators shall be used with outside air and relief air dampers.

B. Motorized Control Dampers
1. Motorized control dampers shall be parallel blade for two-position control and opposed blade for proportional control applications.
2. Dampers shall be black enamel finish, galvanized, with nylon bearings.
3. Blade edge and tip seals shall be included for all dampers.
4. Blades shall be 16 gauge, minimum, and 10 inches wide, maximum the frame shall be welded channel iron.
5. Dampers with both dimensions under 18 inches may have strap iron frames.

C. Temperature Control Panels (TCP)
1. Furnish NEMA 1 (interior) or NEMA 4 (exterior) temperature control panel of code gauge steel, with locking doors, for mounting and devices as shown.
2. They shall meet all applicable requirements of Title 24, California Administrative Code.
3. All controllers, relays, switches, etc., for equipment located in mechanical equipment rooms shall be mounted in a TCP, as shown on the Drawings.
4. Temperature settings, adjustments, and calibration shall be done at the TCP.
5. All electric devices within a control panel shall be factory wired.
6. Provide engraved, laminated plastic nameplates identifying all devices mounted on the face of the control panel.
7. A complete set of related “as-built” control drawings shall be furnished in each control panel.

D. Electronic Thermometers
1. Shall have 2 percent accuracy and 1 ½ degrees repeatability.
2. Shall be mounted on the temperature control panels as shown on the temperature control diagrams.

2.3 GENERAL PRODUCT DESCRIPTION

A. The energy management system shall be capable of integrating multiple building functions, including equipment supervision and control, alarm management, energy management, and historical data collection and archiving.

B. The energy management system shall consist of the following:
   1. Stand-along DDC panels.
   2. Stand-alone application-specific controllers (ASCs).
   3. Portable operator's terminals.

C. The system shall be modular in nature and shall permit expansion of both capacity and functionality through the addition of sensors, actuators, stand-along DDC panels, and operator devices.

D. System architectural design eliminates dependence upon any single device for alarm reporting and control execution.

E. Each DDC panel shall operate independently by performing its own specified control, alarm management, operator I/O, and historical data collection.

F. The failure of any single component or network connection shall not interrupt the execution of control strategies at other operational devices.

G. Stand-alone DDC panels shall be able to access any data from or send control commands and alarm reports directly to any other DDC panel or combination of panels on the network without dependence upon a central processing device.

H. Stand-alone DDC panels shall also be able to send alarm reports to multiple-operator workstations without dependence upon a central processing device.

2.4 NETWORKING/COMMUNICATIONS

A. The design of the EMS network operator workstations and stand-alone DDC panels, as shown on the Drawings.

B. Inherent in the system's design shall be the ability to expand or modify the network.

C. Local Area Network:
   1. Workstation.DDC Panel Support
      a. DDC panels shall directly reside on a local area network such that communications may be executed directly between controllers, directly between workstations, and between controllers and workstations on a peer-to-peer basis.
   2. Dynamic Data Access
      a. All operator devices, either network resident or connected via dial-up modems, shall have the ability to access all point status and application report data or execute control functions for any and all other devices via the local area network.
      b. Access to data shall be based upon logical identification of building equipment.
      c. Access to system data shall not be restricted by the hardware configuration of the energy management system.
      d. The hardware configuration of the EMS network shall be totally transparent to the user when accessing data or developing control programs.
   3. General network design shall include the following provisions:
      a. High-speed data transfer rates for alarm reporting, quick report generation from multiple controllers, and upload/download efficiency between network devices. The minimum baud rate shall be 2.5 megabaud.
      b. Support of any combination of controllers and operator workstations directly connected to the local area network. A minimum of 50 devices shall be supported on a single local area network.
      c. Detection and accommodation of single or multiple failures of either workstations, DDC panels, or the network media. The network shall include provisions for automatically reconfiguring itself to allow all operational equipment to perform their

designated functions as effectively as possible in the event of single or multiple failures.

d. Message and alarm buffering to prevent information from being lost.
e. Error detection, correction, and retransmission to guarantee data integrity.
f. Default device definition to prevent loss of alarms or data, and ensure alarms are reported as quickly as possible in the event an operator device does not respond.
g. Commonly available, multiple-sourced networking components and protocols shall be used to allow the EMS to coexist with other networking applications, such as office automation. MAP, ETHERNET, IBM Token Ring, and ARCNET are acceptable technologies.
h. Use of an industry standard IEEE 802.x protocol. Communications must be of a deterministic nature to ensure calculable performance under worst-case network loading.
i. Synchronization of the real-time clocks in all DDC panels shall be provided.

4. Dial-up Communications
   a. Auto-dial/Auto-answer communications shall be provided to allow stand-alone DDC panels to communicate with remote operator stations on an intermittent basis via telephone lines.
   b. Dial-up Stand-alone DDC Panels
      i. Auto-dial panels shall automatically place calls to workstations to report critical alarms or to upload trend and historical information for archiving.
      ii. Stand-alone DDC panels shall analyze and prioritize all alarms to minimize the initiation of calls. Noncritical alarms shall be buffered in memory and reported as a group of alarms or until an operator manually requests an upload of all alarms.
      iii. The auto-dial program shall include provisions for handling busy signals, “no answers,” and incomplete data transfers. Default devices shall be called when communications cannot be established with primary devices.
   c. Dial-up Workstations
      i. Operators at dail-up workstations shall be able to perform all control functions, all report functions, and all database generation and modification functions as described for workstations connected via the local area network.
      ii. Routines shall be provided to automatically answer calls and either file or display information sent from remote DDC panels.
      iii. The fact that communications is taking place with remote control system over telephone lines shall be completely transparent to an operator.
   d. Modem Characteristics
      i. Dial-up communications shall make use of Hayes compatible 9,600-baud modems and voice-grade telephone lines.
      ii. Each stand-alone DDC panel may have its own modem, or a group of stand-alone DDC panels may share a modem.

2.5 STAND-ALONE DDC PANELS

A. General
   1. Stand-alone DDC panels shall be microprocessor-based, multitasking, multiuser, real-time, digital control processors.
   2. Each stand-alone DDC panel shall consist of modular hardware, with plug0in enclosed processors, communication controllers, power supplies, and input/output modules.
   3. A sufficient number of controllers shall be supplied to fully meet the requirements of this specification and the attached point list.

B. Memory
   1. Each DDC panel shall have sufficient memory to support its own operating system and databases, including the following:
      a. Control processes

b. Energy management applications
c. Alarm management
d. Historical/trend data for all points
e. Maintenance support applications
f. Custom processes
g. Operator I/O
h. Dial-up communications
i. Manual override monitoring

C. Point Types
1. Each DDC panel shall support the following types of point inputs and outputs:
a. Digital inputs for status/alarm contacts.
b. Digital outputs for on/off equipment control.
c. Analog inputs for temperature, pressure, humidity, flow, and position measurements.
d. Analog outputs for damper position control, and capacity control of primary equipment.
e. Pulse inputs for pulsed contact monitoring.

D. Expandability
1. The system shall be modular in nature and shall permit easy expansion through the addition of software applications, workstation hardware, field controllers sensors, and actuators.
2. The system architecture shall support 25 percent expansion capacity of all types of DDC panels and all point types included in the initial installation.

E. Serial Communication Ports
1. Stand –alone DDC panels shall provide at least two RS-232C serial data communication ports for simultaneous operation of multiple-operator I/O devices, such as industry standard printers, laptop workstations, PC workstations, and panel-mounted or portable DDC panel operator's terminals.
2. Stand-alone DDC panels shall allow temporary use of portable devices without interrupting the normal operation of permanently connected modems, printers, or networks terminals.

F. Hardware Override Switches
1. As indicated in the point schedule, the operator shall have the ability to manually override automatic or centrally executed commands at the DDC panel via local, point discrete, onboard hard/off/auto operator override switches for binary control points and gradual switches for analog control-type points.
2. These override switches shall be operable whether the panel is powered or not.

G. Hardware Override Monitoring
1. DDC panels shall monitor the status of position of all overrides.
2. This information shall be included in logs and summaries to inform the operator that automatic control has been inhibited.
3. DDC panels shall also collect override activity information for daily and monthly reports.

H. Local Status Indicator Lamps
1. The DDC panel shall provide status indication for each binary input and output for constant, up-to-date verification of all point conditions, without the need for an operator I/O device.

I. Integrated Online Diagnostics
1. Each DDC panel shall continuously perform self-diagnostics, communication diagnosis, and diagnosis of all subsidiary equipment.

2. The DDC panel shall provide both local and remote annunciation of any detected component failures or repeated failure to establish communication.
3. Indication of the diagnostic results shall be provided at each DDC panel and shall not require the connection of an operator I/O device.

J. Surge and Transient Protection
1. Isolation shall be provided at all network terminations, as well as all field point terminations to suppress induced-voltage transients consistent with IEEE Standard 587-1980.
2. Isolation levels shall be sufficiently high as to allow all signal wiring to be run in the same conduit as high-voltage wiring where acceptable by electrical code.

K. Power Fail Restart
1. In the event of the loss of normal power, there shall be an orderly shutdown of all stand-alone DDC panels to prevent the loss of database or operating system software.
2. Nonvolatile memory shall be incorporated for all critical controller configuration data, and battery backup shall be provided to support the real-time clock and all volatile memory for a minimum of 72 hours.
3. Upon restoration of normal power, the DDC panel shall automatically resume full operation without manual intervention.
4. Should DDC panel memory be lost for any reason, the user shall have the capability of reloading the DDC panel via the local area network via the local RD-232C port or via telephone line dial-in.

2.6 SYSTEM SOFTWARE FEATURES

A. General
1. All necessary software to form a complete operating system as described in this specification shall be provided.
2. The software programs specified in this Section shall be provided as an integral part of the DDC panel and shall not be dependent upon any higher-level computer for execution.

B. Control Software Description
1. The DDC panels shall have the ability to perform the following pretested control algorithms:
   a. Two-position control
   b. Proportional control
   c. Proportional, plus integral control
   d. Proportional, integral, plus derivative control
   e. Automatic control loop tuning
2. Equipment Cycling Protection
   a. Control software shall include a provision for limiting the number of times each piece of equipment may by cycled within any 1-hour period.
3. Heavy Equipment Delays
   a. The system shall provide protection against excessive demand situations during startup periods by automatically introducing time delays between successive start commands to heavy electrical loads.
4. Power Fail Motor Restart
   a. Upon the resumption of normal power, the DDC panel shall analyze the status of all controlled equipment, compare it with normal occupancy scheduling, and turn equipment on or off as necessary to resume normal operation.

C. Energy Management Applications
1. DDC panels shall have the ability to perform any or all of the following energy management routines:

a. Time-of-day scheduling
b. Calendar-based scheduling
c. Holiday scheduling
d. Temporary schedule overrides
e. Optimal start
f. Optimal stop
g. Night setback control
h. Enthalpy switchover (economizer)
i. Peak-demand limiting
j. Temperature-compensated load rolling
k. Fan speed/CFM control
l. Heating/cooling interlock
m. All programs shall be executed automatically without the need for operator intervention and shall be flexible enough to allow user customization
n. Programs shall be applied to building equipment as described in the Execution portion of this Specification.

D. Custom Process Programming Capability
1. DDC panels shall be able to execute custom, job-specific processes defined by the user, to automatically perform calculations and special control routines.
2. Process inputs and variables
   a. It shall be possible to use any of the following in a custom process:
      i. Any system-measured point data or status
      ii. Any calculated data
      iii. Any results from other processes
      iv. User-defined constants
      v. Arithmetic functions (+, -, *, /, square root, exp., etc.)
      vi. Boolean logic operators (and, or exclusive or, etc.)
      vii. On-delay/off-delay/one-shot timers
3. Process Triggers
   a. Custom processes may be triggered based on any combination of the following:
      i. Time interval
      ii. Time of day
      iii. Date
      iv. Other processes
      v. Time programming
      vi. Events (e.g., point alarms)
4. Dynamic Data Access
   a. A single process shall be able to incorporate measured or calculated data from any and all other DDC panels on the local area network.
   b. In addition, a single process shall be able to issue command to points in any and all other DDC panels on the local area network.
5. Advisory/Message Generation
   a. Processes shall be able to generate cooperator messages and advisories to operator I/O devices.
   b. A process shall be able to directly send a message to a specified device, buffer the information in a follow-up file, or cause the execution of a dial-up connection to a remote device, such as a printer or pager.
6. Custom Process Documentation
   a. The custom control programming feature shall be self-documenting.
   b. All interrelationships defined by this feature shall be documented via graphic flowcharts and English language descriptions.

E. Alarm Management
1. Alarm management shall be provided to monitor, buffer, and direct alarm reports to operator devices and memory files.

2. Each DDC panel shall perform distributed, independent alarm analysis and filtering to minimize network traffic and prevent alarms from being lost.
3. At no time shall the DDC panel's ability to report alarms be affected by either operator activity at a PC workstation or local I/O device, or communications with other panels on the network.
4. Point Change Report Description
   a. All alarm or point change reports shall include the point's English language description and the time and date of occurrence.
5. Prioritization
   a. The user shall be able to define the specific system reaction for each point.
   b. Alarms shall be prioritized to minimize nuisance reporting and to speed operator response to critical alarms.
   c. A minimum of three priority levels shall be provided.
   d. Each DDC panel shall automatically inhibit the reporting of selected alarms during system shutdown and startup.
   e. Users shall have the ability to manually inhibit alarm reporting for each point.
   f. The user shall also be able to define under which conditions point changes need to be acknowledged by an operator and/or sent to follow-up files for retrieval and analysis at a later date.
6. Report Routing
   a. Alarm reports, messages, and files will be directed to a user-defined list of operator devices or PCs used for archiving alarm information.
   b. Alarms shall also be automatically directed to a default device in the event a primary device is found to be offline.
7. Alarm Messages
   a. In addition to the point's descriptor and the time and date, the user shall be able to print, display, or store a 65-character alarm message to fully describe the alarm condition or to direct operator response.
   b. Each stand-alone DDC panel shall be capable of storing a library of at least 250 alarm messages.
   c. Each message may be assignable to any number of points in the panel.
8. Auto-Dial Alarm Management
   a. In dial-up applications, only critical alarms shall initiate a call to a remote operator device.
   b. In all other cases, call activity shall be minimized by time stamping and saving reports until an operator-scheduled time, a manual request, or until the buffer space is full.
   c. The alarm buffer must store a minimum of 50 alarms.

F. Historical Data and Trend Analysis
1. A variety of historical data collection utilities shall be provided to automatically sample, store, and display system data in all of the following ways:
   a. Continuous Point Histories
      i. Stand-alone DDC panels shall store point history files for all analog and binary inputs and outputs.
      ii. The point history routine shall continuously and automatically sample the value of all analog inputs at half-hour intervals.
      iii. Samples for all points shall be stored for the past 24 hours to allow the user to immediately analyze equipment performance and all problem-related events for the past day.
      iv. Point history files for binary input or output points and analog output points shall include a continuous record of the last 10 status changes or commands for each point.
   b. Control Loop Performance Trends

i. Stand-alone DDC panels shall also provide high-resolution sampling capability with an operator-adjustable resolution of 10 to 300 seconds in 1-second increments for verification of control loop performance.

c. Extended Samper Period Trends

i. Measured and calculated analog and binary data shall also be assignable to user-definable trends for the purpose of collecting operator-specific performance data over extended periods of time.

ii. Samper intervals of 1 minute to 2 hours, in 1-minute intervals, shall be provided. Each stand-alone DDC panel shall have a dedicated buffer for trend data and shall be capable of storing a minimum of 5,000 data samples.

d. Data Storage and Archiving

i. Trend data shall be stored at the stand-alone DDC panels and uploaded to hard disk storage when archiving is desired.

ii. Uploads shall occur based upon either user-defined intervals, manual command, or when the trend buffers become full.

iii. All trend data shall be available in disk file form for use in third-party personal computer applications.

G. Runtime Totalization

1. Stand-alone DDC panels shall automatically accumulate and store runtime hours for binary input and output points, as specified in the Execution portion of this Specification.
2. The totalization routine shall have a sampling resolution of 1 minute or less.
3. The user shall have the ability to define a warning limit for runtime totalization.
4. Unique, user-specified messages shall be generated when the limit is reached.

H. Analog/Pulse Totalization

1. Stand-alone DDC panels shall automatically sample, calculate, and store consumption totals on a daily, weekly, or monthly basis for user-selected analog and binary pulse input-type points.
2. Totalization shall provide calculation and storage of accumulations of up to 99,999.9 units (e.g., KWH, gallons, KBTU, tons, etc).
3. The totalization routine shall have a sampling resolution of 1 minute or less.
4. The user shall have the ability to define a warning limit.
5. Unique, user-specified messages shall be generated when the limit is reached.

I. Event Totalization

1. Stand-alone DDC panels shall have the ability to count events, such as the number of times a pump or fan system is cycled on and off.
2. Event totalization shall be performed on a daily, weekly, or monthly basis.
3. The event totalization feature shall be able to store the records associated with a minimum of 9,999.9 events, before reset.
4. The user shall have the ability to define a warning limit.
5. Unique, user-specified messages shall be generated when the limit is reached.

2.7 APPLICATIONS-SPECIFIC CONTROLLERS, HVAC APPLCIATIONS

A. Each stand-alone DDC controller shall be able to extend its performance and capacity through the use of remote application-specific controllers (ASCs).

B. Each ASC shall operate as a stand-alone controller, capable of performing its specified control responsibilities independently of other controllers in the network.

C. Each ASC shall be a microprocessor-based, multitasking, real-time digital control processor.

D. Each ASC shall have sufficient memory to support its own operating system and database, including the following:

1. Control processes.
2. Energy management applications
3. Operator I/O (portable service terminal)

E. The operator interface to any ASC point data or programs shall be through any network-resident PC workstation or any PC or portable operator's terminal that is connected to any DDC panel in the network.

F. Application-specific controllers shall directly support the temporary use of a portable service terminal.

G. The capabilities of the portable service terminal shall include, but not be limited to, the following:
1. Display temperatures.
2. Display status.
3. Display set points.
4. Display control parameters.
5. Override binary output control.
6. Override analog set points.
7. Modification of gain and offset constants.

H. Power Fail Protection
1. All system set points, proportional bands, control algorithms, and any other programmable parameters shall be stored such that a power failure of any duration does not necessitate reprogramming the controller.

I. Application Description
1. Rooftop Unit and Ducted Fan Coil Controllers
   a. Controllers shall support, but not be limited to, the following configurations of systems to address current requirements, as described in the Execution portion of this Specification, and for future expansion:
      i. Large air handling units
         1. Mixed air – single path
         2. Mixed air – dual path
         3. 100-percent single path
         4. 100-percent dual path
   b. Controllers shall support all of the necessary point inputs and outputs to perform the specified control sequences in a totally stand-alone fashion.
   c. Controllers shall have a library of control routines and program logic to perform the sequences of operation, as specified in the Execution portion of this Specification.
   d. Occupancy-Based Standby/Comfort Mode Control
      i. Each controller shall have a provision for occupancy-sensing overrides.
      ii. Based upon the contact status of either a manual wall switch or an occupancy-sensing device, the controller shall automatically select either standby or comfort mode to minimize the heating and cooling requirements, while satisfying comfort conditions.
   e. Continuous Zone Temperature Histories
      i. Each controller shall automatically and continuously maintain a history of the associated zone temperature to allow users to quickly analyze space comfort and equipment performance for the past 24 hours.
      ii. A minimum of two samples per hour shall be store.
   f. Alarm Management
      i. Each controller shall perform its own limit and status monitoring and analysis to maximize network performance by reducing unnecessary communications.

PART 3 – EXECUTION

3.1 GENERAL

A. Electrical work shall be executed in accordance with section 16000, ELECTRICAL.

B. Work shall be performed in a workmanlike manner by craftsman skilled in the particular trade. Work shall be performed in accordance with the Plans, Specifications, manufacturer's recommendations, and the best practice in the trade. Completed work shall present a neat and finished appearance.

C. Coordinate work with the Owner and the work of other trades to avoid conflicts, errors, delays, and unnecessary interference during construction.

D. All thermostats or temperature sensors in the conditioned space shall have blank locking covers. Furnish cast aluminum guards where shown on the Plans.

E. Identify each item mounted on the face of a control panel with an engraved, phenolic label (1/4 –inch high engraved letters, minimum). Identify each item of control equipment (except room sensors and thermostats) with stamped tape firmly attached to equipment.

F. All control adjustments shall be accessible without use of a ladder.

G. Thermostats or sensors mounted on outside walls shall be mounted on 1-inch minimum thickness rigid fiberglass insulating base (or equal).

3.2 PROTECTION DURING CONSTRUCTION

A. Throughout the Contract, provide protection for materials and equipment against loss or damage and from the effects of weather.

B. Prior to installation, store items to be installed in indoor locations.

C. Items subject to corrosion under damp conditions and items containing insulation, such as transformers, motors, and controls, shall be stored in indoor, heated, dry locations.

D. Following installation, protect materials, equipment, and insulation from corrosion, physical damage, and moisture.

E. Cap conduit runs during construction with manufactured seals.

F. Keep openings in boxes or equipment closed during construction.

G. Provide temporary heating source for electrical equipment in damp locations or locations subject to condensation, including transformers, motors, and controls, until construction is complete and equipment is energized.

3.3 MATERIAL AND EQUIPMENT INSTALLATION

A. Follow the manufacturer's installation recommendations unless otherwise indicated.

B. Follow the Engineer's decision, at no additional cost to the Owner, wherever any conflict arises between the manufacturer's instruction, State, or other codes and regulations, and these Contract Documents.

C. Keep copy of the manufacturer's installation instructions available on the jobsite for review at all times.

D. Install freestanding equipment in accordance with the manufacturer's recommendations. Unless noted otherwise, mount freestanding equipment on a 3 ½ inch concrete pad.

E. Secure motor control centers (MCCs) and other freestanding equipment rigidly to floors to mounting pads with anchor bolts, expansion shields, or other approved means.

F. Grout mounting channels provided with MCCs into the floor or mounting pads, unless the MCCs are firmly anchored with the specified concrete anchors, in which case the channels are not required.

3.4 CUTTING AND PATCHING

A. Do not cut or notch any structural member or building surface without specific approval of the Engineer.

B. Where possible, avoid any cutting, channeling, chasing, or drilling of floors, walls, partitions, ceilings, paving, or other surfaces.

C. Use clamps and channel where required for the installation, support, or anchorage of conduit, raceways, or other electrical materials and equipment.

D. Following such work, restore surfaces neatly to new condition using skilled craftsmen of the trades involved, at no additional cost to the Owner.

3.5 CLEANING AND TOUCHUP PAINTING

A. Keep the premises free from accumulation of waste material or rubbish.

B. Upon completion of work, remove materials, scraps, and debris from the premises and from the interior and exterior of all devices and equipment.

C. Refinish damaged surfaces to new condition using skilled craftsmen of the trades involved, at no additional cost to the Owner.

3.6 INSTALLATION

A. Electrical work
   1. All temperature control and interlock wiring shall be plenum-rated cable.
   2. Power or interlock wiring shall be run in separate conduit form sensor wiring.
   3. Wiring shall conform to the National Electrical Code.
   4. All wiring of any nature in connection with temperature control system, regardless of voltage, including temperature control wiring, interlocking, and the like, shall be included in the air conditioning work.

END OF SECTION

SECTION 26 00 00

GENERAL ELECTRICAL SPECIFICATIONS

PART 1 GENERAL

1.1 WORK INCLUDED

A. This specification shall apply to all phases of Work hereinafter specified, shown on Drawings, or as required to provide a complete installation of electrical systems for this Project. Work required under this specification is not limited to just the Electrical Drawings - refer to Architectural, Structural, Landscape, and Mechanical/Plumbing Drawings, as well as all other drawings applicable to this project, which designate the scope of work to be accomplished. The intent of the Drawings and Specifications is to provide a complete and operable electrical system that includes all documents that are a part of the Contract.

1. Work Included: Furnish labor, material, services and skilled supervision necessary for the construction, erection, installation, connections, testing, and adjustment of all circuits and electrical equipment specified herein, or shown or noted on Drawings, and its delivery to the Owner complete in all respects ready for use.

2. The electrical Work includes installation or connection of certain materials and equipment furnished by others. Verify installation details, installation and rough-in locations from the actual equipment or from the equipment shop drawings.

B. Electrical Drawings: Electrical Drawings are diagrammatic, and are intended to convey the scope of work, indicating intended general arrangement of equipment, conduit and outlets. Follow Drawings in laying out Work and verify spaces for installation of materials and equipment based on actual dimensions of equipment furnished.

1.2 QUALITY ASSURANCE

A. Design, manufacture, testing and method of installation of all apparatus and materials furnished under requirements of these specifications shall conform to latest publications or standard rules of the following:

1. Institute of Electrical and Electronic Engineers - IEEE

2. National Electrical Manufacturers' Association - NEMA

3. Underwriters' Laboratories, Inc. - UL

4. National Fire Protection Association - NFPA

5. Federal Specifications - Fed. Spec.

6. American Society for Testing and Materials - ASTM

7. American National Standards Institute - ANSI

8. National Electrical Code - NEC

9. National Electrical Safety Code - NESC

10. Insulated Cable Engineers Association - ICEA

11. American Institute of Steel Construction - AISC

12. State and Municipal Codes In Force In The Specific Project Area

13. Occupational Safety and Health Administration (OSHA)

14. Electronics Industries Association/Telecommunications Industry Association (EIA/TIA)

15. California Electrical Code (where adopted)

16. Local Authority Having Jurisdiction (AHJ) Published Electrical Standards and Codes

B. Perform Work in accordance with the National Electrical Code, applicable building ordinances, and other applicable codes, hereinafter referred to as the "Code." The Contractor shall comply with the Code including local amendments and interpretations without added cost to the Owner. Where Contract Documents exceed minimum requirements, the Contract Documents take precedence. Where code conflicts occur, the most stringent shall apply unless variance is approved.

1. Comply with all requirements for permits, licenses, fees and codes. The Contractor, at Contractor's expense, shall obtain all permits, licenses, fees, special service costs, inspections and arrangements required for Work under this contract, unless otherwise specified.

2. Comply with requirements of the applicable utility companies serving this Project. Make all arrangements with utility companies for proper coordination of Work.

1.3 GENERAL REQUIREMENTS

A. Guarantee: Furnish a written guarantee for a period of (1) one-year from date of acceptance.

B. Wherever a discrepancy in quantity or size of conduit, wire, equipment, devices, circuit breakers, etc., (all materials), arises on the Drawing and/or Specifications, the Contractor shall be responsible for providing and installing all material and services required by the strictest condition noted on Drawings and/or in Specifications to ensure complete and operable systems as required by the Owner and Engineer.

C. All Core Cutting, Drilling, and Patching:

1. For the installation of work under this Section, the aforementioned shall be performed under this Section of the Specifications and the Concrete section of the Specifications.

2. No holes will be allowed in any structural members without the written approval of the Project's Structural Engineer.

3. For penetrations of concrete slabs or concrete footings, the work shall be as directed in the Concrete Section of Specifications.

4. The Contractor shall be responsible for patching and repairing surfaces where he is required to penetrate for work under this contract.

5. Penetrations shall be sealed to meet the rated integrity of the surface required to be patched and repaired. The patched surface shall be painted or finished to match the existing surface.

D. Verifying Drawings and Job Conditions:

1. The Contractor shall examine all Drawings and Specifications in a manner to be fully cognizant of all work required under this Section.

2. The Contractor shall visit the site and verify existing conditions. Where existing conditions differ from Drawings, adjustment(s) shall be made and allowances included for all necessary equipment to complete all parts of the Drawings and Specifications.

1.4 WORK IN COOPERATION WITH OTHER TRADES

A. Examine the Drawings and Specifications and determine the work to be performed by the electrical, mechanical and other trades. Provide the type and amount of electrical materials and equipment necessary to place this work in proper operation, completely wired, tested and ready for use. This shall include all conduit, wire, disconnects, relays, and other devices for the required operation sequence of all electrical, mechanical and other systems or equipment.

B. Provide a conduit-only system for low voltage wiring required for control of mechanical and plumbing equipment described in this or other parts of the Contract Documents. Install all control housings, conduits, and backboxes required for installing conductors to the controls.

C. Install separate conduits between each heating, ventilating and air conditioning sensing device and its control panel and/or control motor. Before installing any conduit for heating, ventilating and air conditioning control wiring, verify the exact requirements from the control diagrams provided with the equipment manufacturer's shop drawings.

1.5 TESTING AND ADJUSTMENT

A. Upon completion of all electrical work, the Contractor shall test all circuits, switches, light fixtures, lighting control and dimming systems including distributed systems, UPSs, generators, SPDs, lighting inverters, transfer switches, motors, circuit breakers, motor starters and their auxiliary circuits and any other electrical items to ensure perfect operation of all electrical equipment.

B. Equipment and parts in need of correction and discovered during such testing, shall be immediately repaired or replaced with all new equipment and that part of the system shall then be retested. All such replacement or repair shall be done at no additional cost to the Owner.

C. All circuit(s) shall be tested for continuity and circuit integrity. Adjustments shall be made for circuits not complying with testing criteria.

D. All test reports, including copies of any required Energy Code Acceptance Forms (e.g. CA Title 24 Acceptance for Code Compliance Forms) should be submitted to the Engineer at completion of project.

1.6 IDENTIFICATION

A. Nameplates shall be provided for unit substations, switchgear, switchboards, distribution boards, distribution panels, panel boards, motor control centers, transformers, transfer switches, contactors, starters, disconnect switches, enclosed circuit breakers/switches, inverters, UPSs, PDUs, RDCs, SPDs, lighting control panels, dimming panels, door releasing system panels, fire alarm/central monitoring terminal cabinets/power supplies/control panels, and all low voltage system terminal and control cabinets.

1. Nameplate inscriptions shall be identical to the equipment designations indicated in plans and specifications. Nameplates shall be engraved with the device designation/identification on the top line, source identification for the device on the 2nd line per NEC, or CEC where adopted, Art 408.4 and load designation for the device on the bottom line. Where load designation consists of a branch circuit, omit bottom line. Where device designation is not indicated on plans/specifications, Contractor shall submit a written clarification request to the Engineer.

   Example: Transformer 1TA
   Source Disconnecting Location: Switchboard MSA located in Rm 110
   Load: Panels 1LA and 1 LB

2. All circuit breakers/fuses in switchgear, switchboards, distribution boards, distribution panels, UPS output circuit breakers, PDU sub-feed circuit breakers and motor control centers shall have individual nameplates located immediately adjacent to the respective device. Nameplate inscription shall identify the downstream equipment or device served by the circuit breaker or fuse.

B. Identification nameplates, UON, shall be laminated/extruded modified acrylic that is 3/32" thick, UV-stabilized, matte finish, suitable for use in 180 deg. F ambient, with beveled edges and engraved white letters 3/8" high, minimum, on 1-1/2" high black background (utility/normal and optional standby power systems) for single line of text. Where two lines of text are required, provide minimum 2" high nameplate. Where three lines of text are required, provide minimum 2.5" high nameplate. Provide white letters on red background for all NEC, or CEC where adopted, Article 517 essential power systems, Article 700 Emergency Systems, Article 701 Legally required standby systems and Article 708 COPS.

C. Identification nameplates for new switchgear, switchboards, distribution boards, distribution panels, panel boards and motor control centers shall be attached with switchgear manufacturer-provided screws via switchgear manufacturer factory pre-drilled holes. A factory option to rivet identification nameplates to the equipment is only acceptable if screw-fastened nameplates are not an available option from the switchgear manufacturer. Field drilling or other mechanical attachment methods that change/void the NEMA or NTRL rating of the enclosure are strictly forbidden.

D. Identification nameplates for transformers, transfer switches, disconnect switches, enclosed circuit breakers/switches, inverters, UPSs, PDUs, RDCs, SPDs, lighting control

panels, dimming panels, door releasing system panels, terminal cabinets and all circuit breakers/fuses in switchgear, switchboards, distribution boards, distribution panels, UPS output circuit breakers, PDUs, PDU sub-feed circuit breakers, and motor control centers shall be attached to the equipment by self-adhesive backing integral to the nameplates. When equipment is located outdoors, provide nameplates without self-adhesive backing and attach to equipment using weather-rated, UV-resistant epoxy. In all cases, clean surfaces before applying identification nameplates parallel to equipment lines.

E. Warning Placards, as required by General Single Line Diagram Notes for multiple power sources, or instruction placards, as required for all kirk-key interlock schemes, all UPS bypass procedures or as required elsewhere in the plans/specifications shall be engraved 1/2" high white lettering on a red background using the same material specified for identification nameplates with a self-adhesive backing. Warning/instruction placards shall be attached to the face of the equipment directly related to the placards. Provide a formal placard submittal for review by the Engineer prior to ordering any warning/instruction placards. In all cases, clean surfaces before applying warning/instruction placards parallel to equipment lines.

F. Receptacles that are part of a UL-listed under floor computer room whip assembly, ceiling and/or cable/ladder tray-mounted receptacles used in lab, manufacturing, commercial kitchen environments or that are serving telecom/data/AV racks and cabinets shall have identification nameplates located on the wiring device plate cover. Nameplates shall be self-adhesive, 3/32" thick Micarta with beveled edges, engraved 1/4" high white lettering on black background with serving power source, circuit identification and NEMA/IEC receptacle type. Use of two (2) separate nameplates per device plate cover is acceptable. Affix nameplates to be visible when plugs are occupying receptacles.

G. See wiring device section of this specification for wiring device plate cover labeling requirements.

H. See drawings for panel board schedule directory installation requirements.

I. See conduit installation section of this specification for conduit labeling requirements.

1.7 FINAL INSPECTION AND ACCEPTANCE

A. After all requirements of the Specifications and/or the Drawings have been fully completed; representatives of the Owner will inspect the work. Contractor shall provide competent personnel to demonstrate the operation of any item or system to the full satisfaction of each representative.

B. Final acceptance of the work will be made by the Owner after receipt of approval and recommendation of acceptance from each representative.

1.8 RECORD DRAWINGS

A. Drawings of Record: The Contractor shall provide and keep up-to-date, a complete record set of drawings. These shall be corrected daily and show every change from the original Drawings. This set of prints shall be kept on the job site and shall be used only as a record set. This shall not be construed as authorization for the Contractor to make changes in the layout without definite instruction in each case. Upon completion of the work, a set of reproducible Contract Drawings shall be obtained from the General Contractor and all changes as noted on the record set of prints shall be incorporated thereon with black ink in

a neat, legible, understandable and professional manner. Refer to the Supplementary General Conditions for complete requirements.

1.9 APPROVALS, EQUALS, SUBSTITUTIONS, ALTERNATIVES, NO KNOW EQUAL

A. Approvals: Where the words (or similar terms) “approved”, “approval”, “acceptable”, and “acceptance” are used, it shall be understood that acceptance by the Owner, Architect and Engineer are required.

B. Equal: Where the words (or similar terms) “equal”, “approved equal”, “equal to”, “or equal by”, “or equal” and “equivalent” are used, it shall be understood that these words are followed by the expression “in the opinion of the Owner, Architect, and Engineer.” For the purposes of specifying products, the above words shall indicate the same size, made of the same construction materials, manufactured with equivalent life expectancy, having the same aesthetic appearance/style (includes craftsmanship, physical attributes, color and finish), and the same performance.

C. Substitution: For the purposes of specifying products, “substitution” shall refer to the submittal of a product not explicitly approved by the construction documents/ specifications.

1. Substitutions of specified equipment shall be submitted and received by the Engineer ten (10) days prior to the bid date for review and written approval. Regulatory Agency approval for all substitutions will be the sole responsibility of the Contractor. To receive consideration, requests for substitutions must be accompanied by documentary proof of its equality with the specified material. Documentary proof shall be in letterform and identify the specified values/materials alongside proposed equal values/materials. In addition, catalog brochures and samples, if requested, must be included in the submittal. ONLY PRE-BID APPROVED PRODUCTS, ISSUED VIA A FORMAL BID ADDENDUM TO ALL BIDDERS, WILL BE ALLOWED ON THE PROJECT. REGARDLESS OF THE APPROVAL ON ANY SUBSTITUTION, ALL BIDS SHALL BE BASED ON THE PRODUCTS EXACTLY AS SPECIFIED. PRICING FOR EACH APPROVED SUBSTITUTION SHALL BE INCLUDED IN THE BID SUBMITTAL AS A SEPARATE LINE ITEM.

2. In the event that written authorization is given for a substitution, after award of contract, the Contractor shall submit to the Engineer quotations from suppliers/distributors of both the specified and proposed equal material for price comparison, as well as a verification of delivery dates that conform to the project schedule.

3. In the event of cost reduction, the Owner will be credited with 100 percent of the reduction, arranged by Change Order.

4. The Contractor warrants that substitutions proposed for specified items will fully perform the functions required.

D. Alternates/Alternatives: For the purposes of specifying products, “alternatives/alternates” may be established to enable the Owner/Architect/Engineer to compare costs where alternative materials or methods might be used. An alternate price shall be submitted in addition to the base bid for consideration. If the alternate is deemed acceptable, written authorization will be issued.

E. No Known Equal: For the purposes of specifying products, “No Known Equal” shall mean that the Owner/Architect/Engineer is not aware of an equivalent product. The Contractor will need to submit a “Substitution” item, per the requirements listed above, if a different product is proposed to be utilized.

1.10 SHOP DRAWINGS/SUBMITTALS

A. Shop Drawings/Submittals, unless required otherwise by general project specifications or instructions to bidders, shall be submitted in electronic format (PDF) to include a Letter of Transmittal (PDF), which shall give a list of the drawings submitted with dates and/or system(s) components contained within the submittal. Drawings and material cut sheets shall be complete in every respect and edited/marked to indicate specific items being provided. Printed/Hard copies are not acceptable.

B. The Shop Drawings/Submittals shall be marked with the name of the project, numbered consecutively, and bear the approval of the Contractor as evidence that the Contractor has checked the Drawings. Any Drawings submitted without this approval will be returned to the Contractor for resubmission.

C. If the shop drawings show variations from the requirements of the Contract because of standard shop practice or other reasons, the Contractor shall make specific mention of such variations in the Contractor’s letter of transmittal. If the substitution is accepted, the Contractor shall be responsible for proper adjustment that may be caused by the substitution. Samples shall be submitted when requested.

D. Only products listed as “Equal” within the contract documents, along with formally approved “Substitutions” will be reviewed. Products not conforming to these items will not be reviewed and will be returned to the Contractor for re-submittal.

E. Review comments used in response to shop drawings/submittals are:

1. “No Exception Taken” - Product approved as submitted.

2. “Furnish as Corrected” - Re-submittal not required, although the Contractor shall provide the submitted product with corrections as noted.

3. “Revise and Resubmit” - Re-submittal required with corrections as noted.

4. “Rejected” - Re-submittal required based upon the originally specified product.

F. Shop drawings shall be submitted on the following but not limited to:

1. Lighting Fixtures.

2. Switchboards and Panel boardscomplete with overcurrent device information.

3. Fire Alarm System/Central Monitoring System.

4. Wiring Devices.

5. Lighting Control System/Dimming System Products.

6. Arc Flash, Short-Circuit and Coordination studies.

7. All other products called out on drawings that call for shop drawing submittal.

1.11 MAINTENANCE, SERVICING, INSTRUCTION MANUALS AND WIRING DIAGRAMS

A. Prior to final acceptance of the job, the Electrical Contractor shall furnish to the Owner at least four (4) copies of operating, maintenance, and servicing instructions, as well as four (4) complete wiring diagrams for the following, but not limited to, items or equipment:

1. Lighting Control System/Dimming Systems.

2. Fire Alarm System.

3. Switchboards and Panel boards; complete with overcurrent device information

B. All wiring diagrams shall specifically cover the system supplied. Typical drawings will not be accepted. Four (4) copies shall be presented to the Owner.

1.12 INTERRUPTION OF SERVICE/SERVICE SHUTDOWN

A. Any interruption of electrical services, electrical circuits, electrical feeders, signal systems, communication systems, fire alarm systems, etc. required to perform work, shall meet the specific prior-approval requirements of the Owner. Such work shall be scheduled with the Owner to be performed at the Owner's convenience.

B. Interruptions/outages of any of the Owner’s systems and services mentioned above shall be scheduled to occur during other than the Owner’s normal business hours. Any overtime costs shall be borne by the Contractor.

C. See drawings for any additional requirements regarding outages, interruption and any temporary services required.

PART 2 - PRODUCTS

2.1 MATERIALS

A. Materials and Equipment: All electrical materials and equipment, including custom-made equipment, shall be new and shall be listed by Underwriter's Laboratories (UL) and bear their label or be listed and certified by a Nationally Recognized Testing Lab (NRTL) that is also recognized by the local Authority-Having-Jurisdiction (AHJ)

B. Switchboards/Distribution Boards:

1. See general single line notes on single line drawing for more information.

C. Panel boards – Branch Circuit:

1. See drawings for panel board schedules and specifications.

D. Lighting Fixtures:

1. See drawings for lighting fixture and lamp schedules and additional specifications. Furnish, install and connect a lighting fixture at each outlet where a lighting fixture type symbol (designated on plans) is shown as being installed. Each fixture shall be complete with all required accessories including sockets, glassware, boxes, spacers, mounting devices, fire rating enclosure and lamps.

E. Wiring Devices:

1. Provide wiring devices indicated per plan. Devices shall be specification grade. Acceptable manufacturers are Leviton, Pass and Seymour and Hubbell. Provide all similar devices of same manufacturer, unless indicated otherwise. All device colors shall be from the full range of manufacturer standard color options as selected by the Architect. This selection will be made during the shop drawing review process

a. Wiring Devices (Decora)

1)	Convenience Receptacle	#16252- ???
2)	Dedicated Receptacle	#16352-???
3)	Convenience I.G. Receptacle	#16262-IG-???
4)	Dedicated I.G. Receptacle	#16362-IG-???
5)	Convenience G.F.C.I. Receptacle	#GFT1-???
6)	Dedicated G.F.C.I. Receptacle	#GFNT2-???
7)	Convenience Hospital Grade Receptacle	#16252-HG?-???
8)	Dedicated Hospital Grade Receptacle	#16352-HG?-???
9)	Convenience G.F.C.I. Hospital Grade	#GFNT1-HG?
10)	Dedicated G.F.C.I. Hospital Grade	#GFNT2-HG?
11)	Tamper Resistant Convenience Receptacle	#TDR15-???
12)	Tamper Resistant Dedicated Receptacle	#TDR20-???
13)	Tamper Resistant GFCI Receptacle	#GFTR2-???
14)	Tamper Resistant. Convenience. G.F.C.I. Hospital Grade Receptacle	#GFTR1-HG?
15)	Tamper Resistant. Dedicated. G.F.C.I. Hospital Grade Receptacle	#GFTR2-HG?
16)	Weather/Tamper Resistant GFCI Receptacle	#GFWT2-???
17)	Convenience Simplex Receptacle	#16251-???
18)	Dedicated Simplex Receptacle	#16351-???
19)	Recessed Clock Receptacle	#5361-CH-???(Non-Decora)
20)	Single Pole Switch	#5621-2-???
21)	Double Pole Switch	#5622-2-???
22)	Three Way Switch	#5623-2-???
23)	Four Way Switch	#5624-2-???
24)	Pilot Light Switch “On”	#5628-2-???
25)	Pilot Light Switch “Off”	#5631-2-???
26)	Projection Screen Switch	#5657-2-???
27)	Low Voltage Momentary Switch	#5657-2-???
28)	Keyed Switch	#1221-2L-???(Non-Decora)
29)	Door Jam Switch	#1865-???

b. Use of dedicated receptacles is required where plans depict a branch circuit supplying only a single simplex or duplex receptacle. Use of controlled receptacles is required where depicted on plans - see controlled receptacle specifications for additional information.

2. Wiring devices located in wood finished areas shall generally be black unless otherwise indicated by the Architect.

3. Wiring devices located in mirrors shall generally be white with stainless steel cover plates unless otherwise indicated by the Architect.

4. Wiring device cover plates located on recessed boxes shall be commercial grade nylon. Plate color shall match wiring device color UON on plans. Cover plates utilized on surface mounted boxes shall be metal. Plastic cover plates are unacceptable.

5. Except as otherwise noted, all wiring device plates on the project shall be labeled with panel and circuit number(s) utilizing a Brother P-Touch labeling system with 1/2" tape (yellow on black) or equal by Herman-Tellerman or Panduit. Locate label on the concealed side of the wiring device plate. Handwritten labels are unacceptable.

6. The Contractor shall provide duplex receptacle outlets in the appropriate configurations necessary to comply with applicable energy code requirements for controlled receptacles and as shown on plans. All wiring devices indicated to be controlled receptacles shall be NEMA-approved, electrical code-compliant with factory markings on the face of the receptacle(s) with the word "Controlled" or utilize further markings and symbols to indicate which receptacles on each outlet is/are controlled. Stickers, field-applied markings or other non-permanent markings are not acceptable. Where a GFCI receptacle outlet is required to be controlled, provide an adjacent controlled duplex receptacle outlet connected on the load side of the GFCI outlet. Generally, one receptacle in a duplex receptacle outlet is required to be controlled. It may be the lower receptacle or upper receptacle based on manufacturer offering. However, the controlled receptacle location within a controlled receptacle outlet shall remain consistent throughout the project. Where an existing duplex receptacle outlet is required to be controlled, provide a new wiring device with the appropriate control configuration necessary to comply with plans. All controlled receptacles shall be connected to a branch circuit controlled by an occupancy sensor-based or relay panel lighting control system. Acceptable manufacturers are Leviton, Pass and Seymour and Hubbell.

7. The following wiring device plates shall have custom engraving:

   a. Key operated switches, switches with pilot lights, and switches for the control of motors, heaters and ventilators. Engraving shall be black and occur on the exposed side of the plate indicating the motor, heater, or ventilator controlled.

   b. All stainless steel and nylon device plates shall be engraved using a rotary engraving process except for black lettering on stainless steel device plates which may be accomplished via laser etching process. All lettering shall be 3/16" high. Provide a dimensioned submittal drawing detailing a typical device faceplate with engraving.

F. Weatherproof Outlet Covers/Assemblies: All Receptacles identified as weatherproof on the drawings shall be weather-resistant, tamper-resistant, GFCI type and equipped as follows:

1. Type WP-A: Recessed wall box with a hinged, lockable, cast aluminum, self-closing, gasket-equipped door that is wet location-listed rain tight while "in use". Unit shall comply with NEC, or CEC where adopted, Article 406.9(A) and (B). UON on drawings, provide a minimum of 2 separate compartments suitable for

installation of power receptacles, AV or communications outlets. Additionally, unless otherwise noted on drawings, provide the following:

a. A 20A weather-resistant, tamper-resistant, GFCI duplex receptacle in the first compartment. Provide branch circuiting per plans.

b. A blank metal plate suitable for field installation of power, AV or communications devices in the second compartment.

c. Where indicated on plans as requiring data, AV, or other low voltage service outlet, provide minimum 3/4" C.O. with pull string routed from the second compartment to nearest low voltage pull box. Where shown mounted in a building wall, any blank/unused compartment shall be equipped min. 3/4" C.O. with pull string routed to the nearest accessible ceiling space.

d. See wiring device section of this specification for additional wiring device plate cover labeling requirements.

e. 1 key minimum per device (minimum of 2 per project) to the Owner's project manager upon completion of project.

f. Custom color powder coat finish as selected by Architect - Include all costs in base bid for same.

g. In locations with sufficient wall depth, provide 6" wide x 6" tall x 5-1/2" deep recessed wall box (C.W. Cole #TL310-WCS-K1-CUSTOM COLOR).

h. In locations utilizing shallow stud walls construction or other walls of insufficient depth, provide 10-3/4" wide x 7-3/8" tall x 3-7/8" deep recessed wall box (C.W. Cole #TL310-WCS-SH-K1 -CUSTOM COLOR).

i. See drawings for additional details.

2. Type/Subscript WP-B: Wet location-listed raintight while "in use" cast copper-free aluminum, extra-duty, lockable cover with baked aluminum lacquer finish and one gang, weather-resistant, tamper-resistant GFCI receptacle. Hubbell WP26E series. Polycarbonate covers are unacceptable. Unit shall comply with NEC, or CEC where adopted, Article 406.9(A) and (B). Contractor shall powder coat cover assembly to a custom color where receptacle locations are deemed by the Architect to be in aesthetically sensitive or public spaces. Custom color as selected by Architect.

3. Type WP-C: (C.W. Cole #TL310-WCS-PED-ADA-K1-CUSTOM COLOR or #TL310-WCS-PED-K1-CUSTOM COLOR) pedestal device box with a hinged, lockable, cast aluminum, self-closing, gasket-equipped door that is wet location-listed raintight while "in use". Unit shall comply with NEC, or CEC where adopted, Article 406.9(A) and (B). UON on drawings, provide a minimum of 2 separate compartments suitable for installation power receptacles, AV or communications outlets. Additionally, unless otherwise noted on drawings, provide the following:

a. A 20A weather-resistant, tamper-resistant, GFCI duplex receptacle in the first compartment. Provide branch circuiting per plans.

b. A blank metal plate suitable for field installation of power, AV or communications devices in the second compartment.

c. Where indicated on plans as requiring data, AV, or other low voltage service outlet, provide minimum 3/4" C.O. with pull string routed from the second compartment to nearest low voltage pull box.

d. See wiring device section of this specification for additional wiring device plate cover labeling requirements.

e. 1 key minimum per device (minimum of 2 per project) to the Owner's project manager upon completion of project.

f. Include all costs in base bid for ADA version (22.5" tall) of pedestal box. Prior to ordering material, contractor shall coordinate with Architect and/or AHJ to determine which pedestal box locations do not require ADA compliance and may be changed to the standard (11.5" tall) version of the pedestal box.

g. Custom color powder coat finish as selected by Architect. Include all costs in base bid for same.

h. See drawings for additional details.

G. Circuit Breakers:

1. Service entrance circuit breakers smaller than 400A (Amp) frame shall be thermal-magnetic trip with inverse time current characteristics unless otherwise indicated below. Service entrance main circuit breakers and main circuit breakers, 400A frame and larger, shall be 100% rated, solid-state type as outlined in this specification. All other service entrance circuit breakers, 400A frame and larger, shall be 100% rated, solid-state type as outlined in this specification.

2. All non-service entrance circuit breakers 225A and larger shall be thermal magnetic type and have continuously adjustable instantaneous pick-ups of approximately 5 to 10 times trip rating. Breakers shall have either tamper-resistant rating dials or easily changed trip rating plugs with trip ratings as indicated on the Drawings. Rating plugs shall be interlocked so they are not interchangeable between frames. Additionally, all non-service entrance circuit breakers, 600A frame and larger, located in 480V, 3-phase, 3-wire or 277/480V, 3-phase, 4-wire switchgear, distribution boards, panel boards or busway plugs shall be solid state, 100% rated. Breaker shall have built-in test points for testing long delay, short delay and instantaneous, and ground fault (where shown) functions of the breaker by means of a 120V operated test kit. Contractor shall utilize a test kit capable of testing all breakers 400A and above - at the Engineer’s request.

3. All non-service entrance circuit breakers less than 225A shall be molded plastic case, air circuit breakers conforming to UL 489. Provide breakers with thermal magnetic trip units, and a common trip bar for two- or three-pole breakers, connected internally to each pole so tripping of one pole will automatically trip all poles of each breaker. Provide breakers of trip-free and trip-indicating bolt-on type, with quick-make, quick-break contacts. Provide single two- or three-pole breaker interchangeability. Provide padlocking device for circuit breakers as shown on the Drawings.

4. Where a Current Limiting Circuit Breaker (CLCB) is indicated on drawings or as required elsewhere in this specification, provide a UL listed current limiting thermal magnetic circuit breaker(s) UON. An independently operating limiter section within a molded case is not allowed. Coordinate CLCB ratings as required to protect electrical system components on the load side of the CLCB to include, but not limited to, protecting automatic transfer switches, panel boards and lighting control panels.

5. Where a solid-state circuit breaker is indicated on drawings or as required elsewhere in this specification, provide a solid-state circuit breaker with minimum five function complete with built-in current transformers. The five functions shall be independently adjustable and consist of Overload/Long Time Amp Rating, Long Time Delay, Short Time Delay, Short Circuit/Instantaneous Pickup, but may also include Shunt Trip and/or Ground Fault if so indicated on the Drawings. Rating plugs shall be interlocked so they are not interchangeable between frames. Breaker shall have built-in test points for testing long delay and instantaneous, and ground fault (where shown) functions of the breaker by means of a 120V operated test kit. Contractor shall utilize a test kit capable of testing all breakers 400A and above, at the Engineer's request.

6. Circuit breakers, 1200A Frame or larger, or circuit breakers with sensors or adjustable trip settings, 1200A or larger, shall be equipped with an Energy Reducing Maintenance Switch that complies with NEC, or CEC where adopted, 240.87 (B) (3) unless specified elsewhere with an alternate arc energy reduction method allowed by this same code section.

7. Ground Fault Interrupting Breakers: Provide with molded plastic case, air circuit breakers, similar to above with ground fault circuit interrupt capability, conforming to UL Class A, Group 1.

8. Tandem or half-sized circuit breakers are not permitted.

9. Series-Rated Breakers: UL listed series-rated combinations of breakers can be used to obtain panelboard-interrupting ratings shown on Drawings. If series-rated breakers are used, switchboards, distribution boards, and panel boards shall be appropriately labeled to indicate the use of series-rated breakers. Shop drawing submittal shall include chart of UL listed devices, which coordinate to provide series rating.

10. Circuit breakers shall be standard interrupting construction. Panelboard shall accept standard circuit breakers up to 100A.

11. Circuit breaker handle accessories shall provide provisions for locking handle in the on or off position.

12. Shunt-trip equipped circuit breakers shall be provided on all elevator feeders.

13. Temperature compensating circuit breaker(s) shall be provided when located in outdoor enclosure(s) or when located in an enclosure subject to high ambient heat due to due nearby industrial processes, etc.

14. Provide 75 degree Celsius-rated conductor lugs/lug kits as required on all circuit breakers to accept conductor quantities and sizes shown on drawings.

15. All circuit breaker terminations shall be suitable for use with 75-degree Celsius ampacity conductors. Listed, dual-rated pin terminals, straight or offset, are acceptable for use to in accommodating oversized or parallel conductor installations.

16. Circuit breakers serving Fire Alarm or Central Monitoring panels and power supplies shall be red in color and lockable in the “ON” position.

H. Disconnect Switches:

1. Non-fusible or fusible, heavy-duty, externally-operated horsepower-rated, 600V A.C: Provide NEMA 3R, lockable enclosures for all switches located on rooftops, in wet or damp areas and in any area exposed to the elements.

2. Fusible switches shall be Class “R” when 600A or less or Class “L” when greater than 600A.

3. Amperage, Horsepower, Voltage and number of poles per drawings: All shall be clearly marked on the switch nameplate.

4. Provide the Owner’s project manager with one (1) spare set of fuses and two (2) sets of fuse clips/fuses for every set of fuses on the project.

I. Fuses:

1. Provide fuses at all locations shown on the Drawings and as required for supplemental protection:

   a. Fuses shall be manufactured by Bussman, Shawmut, or equal.

   b. All fuses shall be the product of a single manufacturer.

2. Main and Feeder Protection:

   a. Protective devices rated greater than 600A: Provide Bussman Hi-Cap fuses, Class L, current limiting, having an interrupting rating of 200,000A RMS.

   b. Protective devices rated 600A or less: Provide Bussman Class R fuses, Class RK series current limiting fuses, having an interrupting rating of 200,000A RMS.

3. Motor Protection:

   a. Where rating of protective device is greater than 600A, provide Bussman Hi-Cap fuses, Class L, current limiting, having an interrupting rating of 200,000A RMS.

   b. Where rating of protective device is 600A or less, provide Bussman Class RK series current limiting fuses, having an interrupting rating of 200,000A RMS.

   c. Where fuses feeding motors are indicated, but not sized, it shall be the responsibility of the Contractor to coordinate the fuse size with the motor to provide proper motor running protection.

d. When rejection type fuses are specified (Class RK series) the fuse holder of all switches (specified in other Sections) shall be suitable for the fuses provided.

J. Lighting Control/Dimming Systems:

1. See drawings for Lighting Control and/or Dimming Systems schedules and specifications.

K. Fire Alarm System/Central Monitoring System:

1. See drawings for Fire Alarm System or Central Monitoring System specifications.

L. Conduit:

1. Galvanized Rigid Conduit (GRC) shall be full weight threaded type steel. Steel conduit shall be protected by overall zinc coating to inside and outside surfaces, applied by the hot dip, metalizing, or sherardizing process.

2. Intermediate Metal Conduit (IMC), shall be hot-dipped galvanized in accordance with UL 1242, and meet Federal Specification WWC-581 (latest revision).

3. Electrical Metallic Tubing (EMT) shall be zinc-coated steel with baked enamel or plastic finish on inside surfaces. EMT shall be dipped in a chromic acid bath to chemically form a corrosion-resistant protective coating of zinc chromate over galvanized surface.

4. Flexible metal conduit shall be constructed of aluminum or hot-dipped galvanized steel strips wound spirally with interlocking edges to provide greatest flexibility with maximum strength. Interior surfaces shall be smooth and offer minimum drag to pulling in conductors. Use only as directed in writing by the Engineer with the exception of 400 Hz feeders and 400 Hz branch circuits which shall be run in flexible aluminum conduit.

5. Liquid-tight conduit (Seal-Tite) shall be galvanized steel flexible conduit as above except with moisture and oil-proof jacket, pre-cut lengths and factory-installed fittings. For outdoor installations and motor connections only unless otherwise noted on drawings.

6. Factory assembled, or off-site assembled wiring systems (such as Metal Clad (MC) Cable, Type AC Cable, Type NM Cable, Type BX Cable, etc.) shall not be used unless otherwise indicated in the Allowed Specification Deviations Section or Deductive/Additive Alternate Pricing Section generally located on the symbols list drawing.

7. When approved for use in the Allowed Specification Deviations Section, generally located on the symbols list drawing, MC cables shall be allowed for lighting branch circuits (homeruns shall be EMT), receptacle branch circuits (homeruns shall be EMT) and poke-thru fed systems furniture homeruns. MC shall not be used where exposed, except for a maximum 6’ length for final connections to light fixtures, or terminate in electrical panelboards or distribution boards. Equipment ground conductor shall be green. Isolated ground conductor shall be green with yellow stripe. Provide 600V rated aluminum or lightweight steel interlocking armor Metal Clad (MC) cable with copper conductors, THHN (90-degree C) insulation, and integral equipment grounding conductor and isolated grounding conductor as

required. Type AC cable listed for use in patient care areas for non-essential electrical system branch circuits per NEC or CEC where adopted, Article 517.13 shall be required in such areas in lieu of MC cable. Type AC and MC cable shall not be used for essential electrical system branch circuits. MC cable shall be manufactured to Underwriter Laboratory Standard 1569. See PART 3 - EXECUTION section of this specification for additional installation requirements.

8. Nonmetallic Flexible Tubing (ENT) shall not be used unless otherwise indicated in the Allowed Specification Deviations Section or Deductive/Additive Alternate Pricing Section generally located on the symbols list drawing. Use of ENT, if allowed, is strictly limited to use in CMU walls and parking structures decks or as directed in writing by the Engineer. See PART 3 - EXECUTION section in this specification for additional installation requirements.

9. Non-Metallic Conduit:

   a. Polyvinyl chloride (PVC) rigid conduit, Schedule 40, Type II for underground installation only with solvent welded joints, conforming to Underwriters Laboratories, Inc. (UL) requirements, listed for exposed and direct burial application.

   b. Conduit and fittings shall be produced by the same manufacturer.

M. Fittings:

1. Condulet type fittings shall be smooth inside and out, taper threaded with integral insulating bushing and of the shapes, sizes and types required to facilitate installation or removal of wires and cables from the conduit and tubing system. These fittings shall be of metal, smooth inside and out, thoroughly galvanized, and sherardized cadmium plated.

2. Metallic condulet covers shall have the same finish as the fitting and shall be provided for the opening of each fitting where conductors do not pass through the cover.

3. Connector, coupling, locknut, bushings and caps used with rigid conduit shall be steel, threaded and thoroughly galvanized. Bushings shall be insulated.

4. UON all EMT fittings, connectors and couplings installed in concealed locations, areas not considered to be wet or damp locations by the AHJ, or areas not subject to physical damage, shall be steel, zinc or cadmium plated, threadless, compression, steel locking ring type with insulated throat. Where suitable for use, steel set screw fittings are allowed for trades sizes of 2” and smaller. Insulated throat is not required for fittings, connectors and couplings 1” and smaller.

5. All interior and exterior EMT fittings, connectors and couplings, 2” and smaller, installed in exposed or concealed locations that are considered by the AHJ to be wet or damp locations, shall be Raintite-listed, steel, zinc or cadmium plated, threadless, compression, steel locking ring type with insulated throat. If Raintite-listed, EMT fittings, connectors and couplings are unavailable for a given trade size or if conduit is installed in an area subject to damage – provide rigid metallic or intermediate metallic conduits, fittings, connectors and couplings as required.

6. Flexible steel conduit connectors shall be a malleable iron clamp or squeeze type or steel twist-in type with insulated throat. The finish shall be zinc or cadmium plating.

7. Conduit unions shall be "Erickson" couplings, or approved equal. The use of running threads will not be permitted.

N. 600 Volt Conductors - Wire and Cable:

1. All conductors shall be copper. Provide stranded conductor for #10 AWG and larger or when making flexible connections to vibrating machinery. Use compression "fork" type connectors or transition to solid conductors when connecting to switches, receptacles, etc.

2. Type THHN/THWN-2 thermoplastic, 600 volt, UL approved, dry and wet locations rated at 90 degrees Celsius, for conductors of all sizes from #12 AWG up to and including 1000 kcmil. RHH/RHW insulation is allowed only to provide an Electrical Circuit Protective System to comply with NEC, or CEC where adopted, Articles 695 and 700.

3. Wire and cable shall be new, manufactured not more than six (6) months prior to installation, shall have size, type of insulation, voltage rating and manufacturer's name permanently marked on outer covering at regular intervals.

4. Wire and cable shall be factory color-coded by integral pigmentation with a separate color for each phase and neutral. Each system shall be color-coded and it shall be maintained throughout.

5. Systems Conductor Color Coding:

a. Power 208/120V, 3PH, 4W:

1) Phase A = Black
2) Phase B = Red
3) Phase C = Blue
4) Neutral = White or White with Phase Color Tracer
5) Switch legs = Purple (Switch legs shall also be identified separately by numerical tags).
6) Travelers = Purple with Black stripe or Pink.

b. Power 480/277V, 3PH, 4W:

1) Phase A = Brown
2) Phase B = Orange
3) Phase C = Yellow
4) Neutral = Grey or Grey with Phase Color Tracer
5) Switch legs = Purple (Switch legs shall also be identified separately by numerical tags).
6) Travelers = Purple with black stripe or Pink..

c. Ground Conductors: Green

d. Isolated Ground Conductors: Green with continuous yellow stripe.

e. Fire Alarm System: As recommended by the manufacturer.

6. All color-coding for #12 through #6 AWG conductor shall be as identified above. Conductors #4 AWG and larger shall be identified with utilizing phase tape at each termination.

7. No conductors carrying 120V or more shall be smaller than #12 AWG.

8. Aluminum conductors shall not be used.

9. Wire-pulling compounds used as lubricants in installing conductors in raceways shall only be "Polywater J". No oil, grease, graphite, or similar substances may be used. Pulling of #1/0 or larger conductors shall be done with an approved cable pull machine. Other methods; e.g. using vehicles and block and tackle to install conductors are not acceptable.

O. Junction and Pullboxes:

1. For interior dry locations, boxes shall be NEMA 1 galvanized one-piece drawn steel, knockout type, with removable, machine screw secured covers.

2. For outside, damp or surface locations, boxes shall be NEMA 3R heavy cast aluminum or cast iron with removable, gasketed, non-ferrous machine screw secured covers.

3. For in-grade applications, junction and pull boxes shall be pre-cast concrete or molded fiberglass manufactured by Christy, Brooks-Jensen, or Utility Vault Co. Fiberglass boxes shall:

   a. Be used only in landscape planter areas that are not subject to damage from lawnmowers, tractors and other machinery.

   b. Not be used in lawn or turf areas.

   c. Not exceed 11” W x 17” L in size unless required to be larger to meet code requirements.

4. All boxes shall be sized for the number and sizes of conductors and conduits entering the box and equipped with plaster rings where required.

5. All boxes located in traffic areas shall be traffic rated.

P. Outlet Boxes:

1. For fixtures, boxes shall be galvanized, one-piece drawn steel, knockout type equipped with 3/8" fixture studs and plaster rings where required.

2. For convenience outlets, wall switches, or other devices, outlet boxes shall be galvanized one-piece drawn steel, knockout type 4" x 4"x 2-1/8" minimum size with plaster rings as required.

3. For locations where standard boxes are not suitable due to number and size of conduit to be terminated, special boxes shall be designed to fit space or meet other requirements, and submitted for approval.

4. For exposure to weather, damp locations, or surface mounting, outlet boxes shall be heavy cast aluminum or cast iron with threaded hubs; covers shall be watertight with gaskets and non-ferrous screws.

5. Outlet boxes used for support of ceiling fans shall be galvanized, one-piece drawn steel, knockout type equipped with bracing bars and plaster rings where required and listed for ceiling fan support use. Such boxes shall be labeled and capable of supporting ceiling fan weights up to 70 pounds.

6. See drawings for floor box installation notes and specifications.

Q. Plywood Backboards: Where indicated for telephone or communications system terminals or other equipment assemblies, provide backboards of size indicated. Use 3/4" thick x 8' all (length per plans), Douglas Fir, void-free, kiln-dried, fire-rated plywood finished on one side and prime coat painted on all surfaces with finish coat of enamel paint, color by Architect. Leave one (1) fire-rating stamp/sheet exposed for inspection.

R. Terminal Cabinets:

1. Terminal cabinets shall be fabricated of hot dipped galvanized code gauge sheet metal for flush or surface mounting, complete with barriered sections, a door for each vertically barriered section and sizes as indicated on plan. Doors shall be hinged and lockable. Locks shall be keyed to match the branch circuit panelboards. Terminal cabinet trims shall match the branch circuit panels.

2. Provide each terminal cabinet with a full size mounting backplate.

3. Terminal cabinets shall be installed complete with full-length skirts of the same construction and finish as the terminal cabinet.

4. Where mounted outdoors, terminal cabinets shall be NEMA 3R, weatherproof complete with gaskets and required sealant to prevent moisture from entering the terminal cabinet.

5. All terminal cabinets and terminal cabinet barriered sections shall be labeled by the cabinet or cabinet section use (i.e. CATV, Security, etc.). Labels shall be Micarta type as specified elsewhere in these specifications. Unless otherwise noted, all termination blocks and cables shall be labeled per ANSI/EIA 606 standard.

S. Painting: Terminal cabinets, panels, junction boxes, pull boxes, etc., and conduit installed in public view shall be painted with colors selected by the Architect to match the subject surfaces. Refer to painting section of the specifications for additional requirements.

T. Seismic Design, Certification and Anchoring of Electrical Equipment:

1. Contractor shall include all costs in the base bid for labor, materials, all special inspections and structural engineering design necessary to meet the Seismic Design Requirements for Non-structural Components (Chapter 13, ACE SEI 7-05 Minimum Design loads for Buildings and Other Structures) as required by IBC, or CBC where adopted, Section 1708 and as related to the installation all electrical equipment furnished under this contract. See Specific Project Site Seismic Criteria on architectural and/or structural plans which include Building Occupancy Category, Seismic Design Category, Design Spectral Response Acceleration (S_{DS}), Height factor ratio (z/h) and Site Class. Non-structural Component

Importance Factor (I_P) for a particular component shall be determined based on the following criteria:

a. I_P = 1.0: Non-life safety, Non-structural Components in an Occupancy Category IV Facility not required for continued operations of the facility or in any other Occupancy Category Facility where component failure will not impair continued operation of the facility.

b. I_P=1.5: Designated Seismic Systems are those non-structural components in any Occupancy Category IV facility (except as noted above) or that are a part of any code-defined Critical, Life Safety, Emergency and Legally Required Standby Electrical System. Additionally, those non-structural components containing hazardous materials shall be classified as Designated Seismic Systems. While Designated Seismic Systems are generally identified on the plans, they may include items such as generators, automatic transfer switches, UPS units and all associated electrical distribution equipment and components necessary for the designated seismic system to form a complete and operable system. The Contractor shall ultimately be responsible for identifying Designated Seismic Systems. For any electrical component either identified on the plans or determined by the contractor to be a Designated Seismic System, all line and load side electrical distribution systems supporting that Designated Seismic System (including, but not limited to, feeders, panel boards switchboards, transformers, all related component supports and attachments etc.) shall be considered a part of the designated seismic system for the purposes of code-compliance and seismic certification.

c. z/h - Height factor ratio: See plans for respective equipment locations.

2. Provide a delegated-design submittal for each of the following seismic-restraint systems to be used as required:

a. Restraint Channel Bracings consisting of MFMA-4, shop-or field-fabricated bracing assembly made of slotted steel channels with accessories for attachment to braced component at one end and to building structure at the other end, with other matching components, and with corrosion-resistant coating; rated in tension, compression, and torsion forces.

b. Restraint Cables consisting of ASTM A 603 galvanized-steel cables. End connections made of steel assemblies with thimbles, brackets, swivel, and bolts designed for restraining cable service, with a minimum of two clamping bolts for cable engagement.

c. Seismic-Restraint Accessories consisting of hanger rod/hanger rod stiffener assemblies, multifunctional steel connectors for attaching hangers to rigid channel bracings and/or restraint cables, bushings for floor and wall-mounted equipment anchor bolts and resilient isolation washers and bushings.

d. Mechanical Anchor Bolts consisting of drilled-in and stud-wedge or female-wedge type in zinc-coated steel for interior applications and stainless steel for exterior applications. Select anchor bolts with strength required for anchor and as tested according to ASTM E 488.

e. Adhesive Anchor Bolts consisting of drilled-in and capsule anchor system containing resin and accelerator, or injected polymer or hybrid mortar adhesive. Provide specific LEED-compatible environmentally-friendly resins and adhesives on all LEED projects. Provide anchor bolts and hardware with zinc-coated steel for interior applications and stainless steel for exterior applications. Select anchor bolts with strength required for anchor and as tested according to ASTM E 488.

3. Submittal shall include design calculations and details for selecting seismic restraints complying with performance requirements, design criteria, and analysis data signed and sealed by the contractor's structural engineer responsible for their preparation. Calculations shall include, but not be limited to, static and dynamic loading caused by equipment weight, operation, and seismic and, if applicable, wind forces required to select seismic and, if applicable, wind restraints and for designing vibration isolation bases. Provide seismic and wind-restraint detailing to support system selection, arrangement of restraints, attachment locations, methods, and spacings with all components identified to include their strengths, directions and values of forces transmitted to the structure during seismic events and association with vibration isolation devices. Sizes of components shall be selected so strength will be adequate to carry present static and seismic loads to accommodate 25% spare future capacity within specified loading limits.

4. Any pre-approval and evaluation documentation shall have a California Office of Statewide Health Planning and Development (OSHPD) Special Seismic Certification Preapproval (OSP) demonstrating horizontal and vertical load testing and analysis showing maximum seismic-restraint ratings, by ICC-ES or another agency acceptable to authorities having jurisdiction. Ratings based on independent testing are preferred to ratings based on calculations. If preapproved ratings are not available, submittals based on independent testing are preferred. Calculations (including combining shear and tensile loads) that support seismic-restraint designs must be signed and sealed by a qualified professional engineer.

5. Coordinate the location of embedded connection hardware with supported equipment attachment and mounting points and with requirements for concrete reinforcement and formwork specified elsewhere in the project specifications.

6. Install flexible connections in runs of raceways, cables, wireways, cable trays, and busways where they cross seismic joints, where adjacent sections or branches are supported by different structural elements, and where connection is terminated to equipment that is anchored to a different structural element from the one supporting them as they approach equipment. Flexible connection limitations of the NEC, or CEC where adopted, shall apply.

7. Install seismic-restraint devices using methods approved by OSHPD or an agency acceptable to authorities having jurisdiction providing required submittals for component.

8. Multiple Raceways or Cables: Secure raceways and cables to trapeze member with clamps approved for application by OSHPD or an agency acceptable to authorities having jurisdiction.

9. The contractor shall engage a qualified testing agency to perform tests and inspections as listed in other Project Specifications, but as a minimum shall include at least four of each type and size of installed anchors and fasteners selected by Architect. Schedule tests with Owner, through Architect, before connecting

anchorage device to restrained component (unless post connection testing has been approved), and with at least seven days' advance notice. Obtain Architect's approval before transmitting test loads to structure. Provide temporary load-spreading members as required. Test to 90 percent of rated proof load of device. Prepare and submit test and inspections reports.

U. Trenching and Backfilling: Contractor shall be responsible for trenching and backfilling. Refer to Trenching and Backfilling section of the specifications for complete requirements.

PART 3 - EXECUTION

3.1 PREPARATION AND INSTALLATION

A. Installation of Conduit and Outlet Boxes:

1. All conduit installed in the dry walls or ceilings of a building shall be steel tube (EMT), aluminum tube (EMT), or Intermediate Metal Conduit (IMC). Flexible conduit shall not be used in lieu of EMT, IMC or rigid conduit except as noted herein.

2. Galvanized rigid conduit (GRC) or intermediate metal conduit (IMC) shall be used as follows:

   a. When noted on the drawings.

   b. When considered exposed to damage by the local AHJ.

   c. When installed in wet or damp locations and of a trade size where listed-Raintite fittings, connectors, couplings etc. are unavailable.

   d. When required by NEC or CEC Article 517.13.

   e. When installed in concrete and masonry. The use of ENT in CMU walls and parking structures may be allowed only as directed in writing by the Engineer. Request for ENT substitution must be made prior to bid and in accordance with pre-bid substitution requests requirements of these specifications.

3. Intermediate metal conduit (IMC), is approved for use in all locations as approved for GRC or steel-tube EMT and in accordance with NEC, or CEC where adopted, Article 342.

4. Flexible steel conduit shall only be permitted to be used at light fixture outlets and connections to vibrating electrical equipment. Except when concealed in walls or other structural elements, all flexible steel conduit runs shall be less than 6'-0". All outdoor installation shall be made using liquid-tight flex with approved fittings. Include a separate insulated green ground conductor sized per NEC in each conduit. Other uses of flexible conduit shall be allowed only as approved in writing by the Engineer.

5. Flexible liquidtight conduit shall be installed in lieu of the flexible steel; where required by the NEC, or CEC where adopted, in damp and wet location, where exposed to weather, in refrigerated area (65°F or less), and/or between seismic

joints. All rotating electrical equipment shall be supplied with flexible, liquid-tight conduit with appropriate slack and shall not exceed thirty-six (36) inches. Include a separate insulated green ground conductor sized per NEC in each conduit. Other uses of liquidtight flexible conduit shall be allowed as approved in writing by the Engineer on a case by case basis.

6. Rigid metallic conduit installed underground or embedded in concrete shall be 1” trade size minimum and shall be wrapped with 20 mil. Polyvinylchloride plastic tape, PVC conduit installed underground or embedded in concrete shall be 3/4" minimum trade size.

7. Where required for providing an electrical circuit protective system to comply with NEC, or CEC where adopted, Articles 695 and 700 utilize UL Listed 2-hour fire-rated, MC cable or UL Listed 2-hour fire-rated RHH/RHW conductors in conduit.

8. Conduit shall be run so as not to interfere with other piping fixtures or equipment.

9. The ends of all conduit shall be cut square, carefully reamed out to full size and shall be shouldered in fitting.

10. No running threads will be permitted in locations exposed to the weather, in concrete or underground. Special union fittings shall be used in these locations.

11. Where conduit is underground, under slabs or grade, exposed to the weather, or in wet locations, make joints liquid tight and gas tight.

12. All metal conduit in masonry and concrete and where concealed under floor slabs shall have joints painted with thread compound prior to makeup.

13. PVC conduit shall not be run in walls except where approved by the Engineer prior to bid in limited instances that may include concrete or CMU walls used in site retaining, parking structures, or exterior equipment yard or enclosure walls, etc.

14. Where conductors enter a raceway or a raceway in a cabinet, pull box, junction box, or auxiliary gutter, the conductors shall be protected by a plastic bushing type fitting providing a smoothly rounded insulating surface.

15. Where conduit extends through roof to equipment on roof area, the Contractor shall provide flashing material compatible with the roofing system as required by the roofing specifications or as required by the Owner’s roof warranty. This flashing shall be delivered to the roofing Contractor for installation. The actual location of all such roof penetrations and outlets shall be verified by the Architect/Owner. Contractor to verify type of flashing prior to bid and include all costs.

16. All conduit shall be supported at intervals not less than 6'-0" and within 12" from any outlet and at each side of bends and elbows. Conduit supports shall be galvanized, heavy stamped, two-hole conduit clamp properly secured.

17. Where conduit racks are used the rack shall consist of two-piece conduit clamps attached to galvanized steel slotted channels, properly secured via threaded rods attached directly to the building structure.

18. Nail-in conduit supports, one-piece set screw type conduit clamps or perforated iron for supporting conduit shall not be used.

19. Seismic Conduit Support:

    a. All conduit shall be supported in such a manner that it is securely attached to the structure of the building. Attachment is to be capable of supporting the tributary weight of conduit and contents in any direction. Maximum spacing of support and braces are to be as follows:

CONDUIT SIZE	MAXIMUM SPACING
1/2" to 3"	6'-0"
3-1/2" to 4"	8'-0"

20. All conduit runs shall be installed parallel or perpendicular to walls, structural members, or intersection of vertical planes and ceilings. Field made bends and offset shall be avoided where possible. Crushed or deformed raceway shall not be installed.

21. Open knockouts in outlet boxes only where required for inserting conduit.

22. Locate wall outlet of the same type at same level in all rooms, except where otherwise noted.

23. Outlet boxes on metal studs shall be attached to metal hangers, tack welded or screwed to studs; on wood studs attachment shall be with wood screws, nails are not acceptable.

24. Recessed boxes shall not be mounted back-to-back in any wall; minimum offset shall be 24 inches.

25. Junction Boxes that do not contain any device(s) shall be located in storage rooms, electrical closets, or above accessible ceilings, not in hard lid ceilings or other forms of inaccessible ceilings. Place boxes which must be exposed to public view in a location approved by the Owner's Project Manager. Provide covers or plates to match adjacent surfaces as approved by the Owner's Project manager.

26. Surface mounted pull boxes, terminal cabinets, junction boxes, panel boards etc., shall be attached to walls using appropriate screws, fasteners, backing plates, stud blocking etc., as detailed on architectural and/or structural drawings. If architectural and/or structural drawings are not provided on the project, Contractor shall provide all necessary mounting hardware and backing support to comply with local building code requirements and any additional requirements imposed by the local Authority-Having-Jurisdiction.

27. Sleeves shall be installed where conduit passes through masonry or concrete walls and shall be 24-gauge galvanized steel no more than 1/2" greater in diameter than the outside diameter of the conduit. When located in non-rated structures, caulk conduit sleeve with stone wool and waterproof below grade. When located in fire rated structures, provide UL listed fire stopping system. See fire stopping section of this specification for additional requirements.

28. All boxes shall be covered with outlet box protector, Appleton SB-CK, or similar device/method to keep dirt/debris from entering box, conduit or panels. If dirt/debris does get in, it shall be removed prior to pulling wires.

29. All boxes installed outdoors shall be suitable for outdoor installations, gasketed, screw cover, and painted as directed by the Architect with weatherproof paint to match building.

30. All conduit entries to outdoor mounted panels, cabinets, boxes, etc., shall be made using Myers "SCRU-TITE" hubs Series ST.

31. Provide nylon or a 1/8-inch O.D. polyethylene rope, rated at 250 pounds tensile strength, in all conduits more than 5 feet in length left empty for future use. Not less than 5 feet of rope shall be left at each end of the conduit. Tag all lines with a plastic tag at each end indicating the termination/stub location of the opposite end of the conduit.

32. All multiple conduit runs within suspended ceilings shall be suspended from building structure by means of unistrut hangers/racks, Conduit shall not be allowed to lay on ceiling or be supported from ceiling suspension wires or other suspension system. Support conduit to structure above suspended ceilings 8" minimum above ceiling to allow removal of ceiling tile. Maintain two-inch clearance above recessed light fixtures

33. All exposed conduits and support hardware shall be painted to match the finish of the wall or ceiling to which it is supported.

34. Where conduits or wireways cross seismic joints, provide approved flexible conduit connection or approved expansion/deflection fitting to allow for displacement of conduit in all three axes. Connection shall allow for movement in accordance with design of seismic joint. Non-flexible raceways crossing expansion joints or other areas of possible structural movement shall make provision for 3-way movement at such points by means of expansion/deflection fittings. Fittings shall be installed in the center of their axes of movement and shall not be deflected to make part of a conduit bend, or compressed or extended to compensate for incorrect conduit expansion/deflection fittings(s) complete with ground jumpers. Where necessary, provide approved expansion joints to allow for thermal expansion and contraction of conduit(s). Install expansion joints complete with ground jumpers.

35. Seal all conduits where termination is subject to moisture or where conduit penetrates exterior wall, floor or roof, in refrigerated areas, classified (hazardous areas) and as indicated on the drawings.

36. Except as otherwise indicated on the Drawings or elsewhere in these specifications, bends in feeder and branch circuit conduit 2 inches or larger shall have a radius or curvature of the inner edge, equal to not less than ten (10) times the internal diameter of the conduit. Except where sweeping vertically into a building, and where sweep radius equals ten (10) times conduit diameter, underground communications and building interconnect conduits 3 inches or larger shall have a minimum 12’-6” radius or curvature of the inner edge. For the serving utilities, radius bends shall be made per their respective specifications.

37. Tag all empty conduits at each accessible end with a permanent tag identifying the purpose of the conduit, footage end-to-end, and the location of the other end. In wet, corrosive outdoor or underground locations, use brass, bronze, or copper 16-gauge tags secured to conduit ends with #16 or larger galvanized wire. Inscribe on the tags, with steel punch dies, clear and complete identifying information.

38. The following additional requirements shall apply to underground conduits:

a. Underground conduit shall be Schedule 40 PVC (polyvinyl chloride) unless otherwise indicated elsewhere in these specifications.

b. For all communications conduits 2" and larger and feeders 100A or greater, provide with a minimum 3" inch, (2,000 LB) concrete envelope, 2-inch minimum separation between conduits, installed at depth of not less than 24" below grade. (Provide concrete encasement and/or greater minimum conduit depth as required by the Utility Companies.) Conduit separation within a duct bank shall be maintained using plastic spacers located at 5'-0" intervals. Where power and communication conduits are run in a common trench, a 12-inch minimum separation shall be maintained between power and communication conduits or as required by Utility Companies. Where concrete encasement is not required by serving utilities for a utility-only duct bank, provide free draining sand bedding suitable to achieve 95% relative compaction based on ASTM D1557 using 6” lifts or directed by Utility Company Standards.

c. In all cases, where any conduit(s) pass under a building slab or footing, the electrical Contractor will provide a Bentonite clay or concrete barrier that conforms to the height and width of the trench excavation extending a minimum of 24” on either side of the foundation. In all cases, where conduit(s) pass through a sleeve in a footing or other foundation element, the electrical Contractor will provide a Bentonite clay or concrete barrier between the sleeve and the conduit(s) surrounding the conduit(s) for the entire depth of the sleeve. The barrier is required to prevent passage of moisture under or through the slab or footing via the trench or sleeve.

d. Where underground conduit passes under a building slab, concrete encasement may not be required, except as required above, contact the Engineer for written direction prior to omitting any encasement.

e. Underground conduits, which terminate inside building(s) below grade, such as in a basement level, or which slope so that water might flow into interior building spaces, shall be sealed at the point of penetration with a modular conduit seal (Link-Seal or equal by Rox Systems). Conduit/conduit sealing system penetrations of waterproofing membranes/systems on existing structures shall be completely restored as required to maintain membrane/system manufacturer and installer warranty for the installation. All conduits shall be provided with a 4% slope away from buildings. All conduits shall be installed such that the water cannot accumulate in the conduit and such that water drains into the nearest manhole, pull box or vault – not into the facility. In instances where grade changes or elevation differences prevent sloping of conduit away from a building into the nearest manhole, pull box or vault or where accumulation of water in a manhole, pull box or vault may result in water traveling into the facility, conduits shall be sealed internally at each end of each conduit using conduit sealing bushing, sized as required for the conductors contained within the conduit (O-Z Gedney #CSBG 100psig withstand or equal). In all cases, install plugs or caps in spare (empty) conduits at both ends of each conduit (Jackmoon or equal) preventing both water and gas from entering the facility via the conduits.

f. Include a separate insulated green ground conductor sized per NEC, or CEC where adopted, in each underground electrical feeder/branch circuit.

g. All underground conduits with circuits rated at 40As or greater and all underground communications conduits shall be provided with a metallic marker tape located 12 inches below the finished grade.

h. Where underground conduits sweep into/through slabs, utilize PVC 90 degree sweeps that transition, via female PVC adapter to GRC coupling mounted flush in slab. GRC couplings shall be 1/2 lap taped with 20-mil tape. If the distance of the conduit run between a sweep and the next connecting sweep, pullbox, vault or manhole exceeds 150 ft then the sweep shall be concrete encased. Exceptions:

1) Communications conduits shown terminating at a finished floor shall have an additional 4” high GRC nipple equipped with a bushing, removable conduit plug, labeling tag and pull rope. Tie off pull rope to conduit plug.
2) Utility conduit sweeps shall be installed per the requirements of the respective utility company.

i. All PVC conduit shall be glued for a water and gas tight installation. The Contractor shall use appropriate solvent on all joints prior to gluing conduit and fittings together.

j. All underground conduit work shall conform to the Federal, State and Local Safety Orders or Rules regarding excavations, trenches and related earthwork. For projects in California, refer to the California Code of Regulations, Title 8, Construction Code Sections 1540 and 1541 for additional requirements.

39. Installation of Metal Clad (MC) Cable (when use is permitted in the Allowed Specification Deviations Section or Deductive/Additive Alternate Pricing Section, generally located on the symbols list drawing).

a. Provide J-box above accessible ceiling prior to running MC cable within partitions or walls. J-box shall be permanently labeled with panel identification and circuit numbers contained within.

b. Overhead MC cable runs shall generally follow building lines to provide a neat and workmanlike installation.

c. Provide code-sized J-boxes to accommodate MC cable splicing in general. For systems furniture poke-through feeds utilizing MC cable, transition from MC cables to conduit and wire near the panelboard in the TI accessible ceiling space on the floor below the panel board via code-sized gutter(s). Utilize UL listed, insulated barrier strips with recessed screw heads (Ideal #89-6?? Series or equal) fastened within the gutter(s), terminate MC conductors on one side of the strips(s) and individual conductors in conduit from the panelboard(s) on the other side of the strip(s). Label each terminal strip(s) with panel designation. Label each phase conductor with circuit number using wire markers (Ideal or equal). Wire nuts are not an acceptable alternative to the terminal strips in these underfloor transition locations. Provide (1) spare 3/4” conduit from each gutter to its respective panelboard.

d. MC cable shall not run directly into panelboards, distribution boards or electrical rooms.

e. MC cabling shall be provided with its own code-approved ceiling support wires, cable hangers, individual spring steel support clips, steel trapeze hangers, threaded roads or dedicated #10 AWG drop wire. Cable supports shall be fastened to concrete slabs, beams, joists or other structural members of the building. In no case shall MC cable rest on ceilings, suspended ceilings or structures. Do not support MC cable using ceiling support wires. The use of nylon cable ties to support MC cable is not allowed.

f. Use lock or spring nut MC cable fittings.

g. Cable runs shall be continuous from wiring device to wiring device – no intermediate splicing J-boxes allowed.

h. When terminating or splicing at a junction, outlet, or switch box, cut the cable with an armored cable rotary cutter such that 6-inches of free conductors remain for connections or splices. Use screw-in or spring lock connector and ensure a proper bonding by firmly tightening the connector to both the box and cable. Insert an anti-short bushing at cable ends to protect conductors from abrasion and use insulated connectors.

i. MC cable bend radius shall not e less than seven (7) times the external diameter of the cable.

j. MC cables passing through fire-rated walls or floors shall be firestopped as required with a UL listed system. See firestopping requirements outlined elsewhere in this specification for additional requirements.

k. Installation shall not exceed code requirements for total current carrying conductors in multiple MC Cable runs bundled together into a single MC cable hanger or strap, unless support device is specifically listed for such purpose. Neutrals shall be counted as current carrying conductors.

l. Maintain MC Cable clearance of at least 6 inches from hot water and any other high temperature pipes. Maintain at least 12-inches clearance between MC cable(s) and telecommunication conduits and cables. MC cable shall cross telecommunication cables and conduits at right angles.

m. MC cabling shall not be run through exposed ceilings, where open grid conditions exist, exposed on walls, or exposed to view. See Power Plan and Lighting Plan General Notes for additional requirements.

40. Installation of Electrical Nonmetallic Tubing (ENT) Cable (when use is permitted in the Allowed Specification Deviations Section or Deductive/Additive Alternate Pricing Section generally located on the symbols list drawing).

a. When approved for use in the Allowed Specification Deviations Section or Deductive/Additive Alternate Pricing Section, generally located on the symbols list drawing, 1/2" and 3/4” trade size ENT shall be allowed for concealed lighting branch circuits, receptacle branch circuits and miscellaneous signal system circuits within concrete floors, walls and columns within parking structures.

b. ENT conduit shall meet the requirements of Underwriters Laboratories Standards 1479 and 1655, NEMA TC-13, and be UL-listed.

c. All ENT conduit, ENT fittings, ENT boxes and ENT accessories shall be UL listed and manufactured by the same manufacturer so as to form a complete ENT system. ENT systems shall only be used if they are listed for use in fire resistance rated concrete floors and ceilings with resistance ratings as indicated elsewhere in the project plans. ENT system shall comply with NEC, or CEC where adopted, Article 362.

d. All ENT fittings and ENT boxes shall be concrete-tight listed without the use of tape. Additionally, ENT fittings shall be constructed of high impact PVC and able to resist ENT conduit pull out forces of a minimum of 175 lbs. ENT fittings with fewer than 6 locking tabs for ENT connection shall utilize manufacturer approved glue as additional protection from fitting/conduit separation. ENT conduit to rigid conduit transition fittings shall be equipped with set screw fittings on the rigid conduit side of the fitting. ENT to metal box fittings shall be equipped with a threaded end and lock washer.

e. Where tubing enters a box, fitting, or other enclosure provide a bushing or adapter to protect conductors from abrasion unless the box, fitting, or enclosure design provides equivalent protection.

f. ENT junction boxes shall have brass screw inserts and shall be rated to support lighting fixtures weighing less than 50 lbs.

g. Concrete tight metal boxes shall be used to support pendant hung fixtures or fixtures over 50 lbs.

h. ENT shall be provided in continuous lengths between junction boxes without use of in-line splices or connectors and shall be clearly marked/labeled at least every 10 feet.

i. All ENT conduit containing electrical branch circuits shall contain a code-sized equipment ground conductor.

j. ENT shall transition to EMT, IMC, RMC, or rigid PVC, as appropriate or as called out elsewhere in this specification, for all exposed conduits within/on/under a parking structure.

k. ENT shall transition to appropriately sized PVC expansion joint(s) at all structure expansion or seismic joints.

l. ENT shall be securely fastened and supported every 2 – 3 ft. and within 1 ft. of every junction box and fitting to prevent movement and sag.

m. ENT shall be routed straight without sags, or excessive bending. Where bends are required, comply with Table 362.24 of the NEC for minimum radius of bends. Number of bends shall not exceed quantity allowed by code where used for power and lighting branch circuit and/or feeder conductors. Where utilized for communications system conductors (phones, data cabling, etc.) number of bends shall not exceed the equivalent of (2) 90-degree bends with conduit length no more than 100 feet without installation of a TIA 569-compliant pull box.

n. Separation of ENT from fittings, excessive sags, or deflections in ENT runs that prevent pulling of wire and other ENT system product or system

installation failures/errors shall be corrected by saw cutting and patching as necessary at no additional cost to the Owner. Use of surface mounted conduits and junction boxes as a repair method is unacceptable.

o. Empty ENT runs shall be provided with a nylon pull string.

p. Coordinate installation of raceway with structural steel and other structural members. Do not cut, notch or otherwise alter structural members without obtaining approval in writing from the Structural Engineer of record.

q. No more than (2) 3/4” ENT conduits may cross each other within a horizontal concrete slab without obtaining approval in writing from the Structural Engineer of record.

B. Installation of 600-Volt Conductors:

1. All electrical wire, including signal circuits, shall be installed in conduit.

2. All circuits and feeder wires for all systems shall be continuous from over current protective device or switch to terminal or farthest outlet. No joints shall be made except in pull, junction or outlet boxes, or in panel or switchboard gutters.

a. Utilize preinsulated "winged" spring type connectors, 3M Company "Performance Plus" #O/B or #R/Y or equal as required for splices and taps in conductors #6 AWG and smaller. When a spring connector is used in an underground environment or when subject to moisture, utilize a 3M Company Scotchcast 3507G epoxy resin connector sealing pack to seal the spring connector. THE USE OF PUSH-WIRE CONNECTORS (e.g. “WAGO” OR EQUIVALENT) IS STRICTLY PROHIBITED.

b. Wires #4 AWG and larger AWG shall be joined together as follows:

1) When located in an underground environment or when subject to moisture, the splice shall be made with compression connector and sealed by a 3M, or equal, PST cold shrink connector insulator.
2) When located in an interior environment, the splice shall be made with an Ilsco or equal dual rated, insulated splice-reducer connector or multi-tap connector-listed for use with 75/90-degree Celsius rated conductors.

c. Connections to busbar shall be made with dual-rated copper/aluminum one-piece compression lugs. Paralleled conductor connections shall be by mechanical lugs.

3. Thoroughly clean all conduit and wire-ways and see that all parts are perfectly dry before pulling any wires.

4. Install UL approved fixture wire from all lighting fixture lamp sockets into fixture outlet or junction box.

5. For 20A branch circuit wiring, increase #12 conductors to #10 for 120-volt circuits longer than 100 feet and for 277V circuits longer than 150 feet.

6. Conductor Support: Provide conductor supports as required by codes and recommended by cable manufacturer. Where required, provide cable supports in vertical conduits and provide lower end of conduit with a ventilator.

C. Grounding/Bonding:

1. Provide grounding and bonding for entire electric installation as shown on plans, as listed herein, and as required by applicable codes. Included, but not limited to, are items that require grounding/bonding:

   a. Conduit and Raceways.

   b. Neutral or identified conductors of interior wiring system.

   c. Panel boards, Distribution Boards, Switchgear and Switchboards.

   d. Non-current carrying metal parts of fixed equipment.

   e. Telephone distribution equipment.

   f. Metal piping installed in or attached to a building/structure.

   g. Metallically isolated structural steel.

   h. Metallically isolated underground metal water piping.

2. Use of Ground Rods: Furnish and install required number of 3/4" x 10' copper clad ground rods to meet specified resistance, all required grounding wires, conduit and clamps. The size of the grounding conductors shall be not less than that set forth in the latest edition of the California Code of Regulations, Title 24, State of California and NEC (CEC, where adopted), unless otherwise indicated. Rods shall be installed such that at least 10 feet of length is in contact with the soil. Where rock bottom is encountered, the electrode shall be driven at an oblique angle not to exceed 45 degrees from vertical or shall be buried in a trench that is at least 30 inches deep. The upper end of the electrode shall be flush with or below ground level unless the above ground end and the grounding electrode conductor attachments are protected against physical damage. Unless otherwise noted, connection to the grounding electrode conductor may be by compression type or exothermic process connector. Mechanical connectors shall not be used.

3. Grounding System Connection:

   a. Compression connectors shall be unplated copper, manufactured by Burndy, or approved equal, designed specifically for the intended connection.

   b. Exothermic weld-type connectors shall be ‘Cadweld’ manufactured by Erico Products, or approved equal, designed specifically for the intended connection.

   c. Mechanical connectors shall not be used.

4. Isolated Ground Receptacles shall have an insulated ground wire connected between the receptacle and the panelboard isolated ground bus. Unless otherwise

noted, this ground wire shall not be grounded at any other point, and shall be distinguished from other ground wires by a continuous yellow stripe.

5. Provide separate green equipment ground conductor in all electrical raceways to effectively ground all fixtures, panels, controls, motors, disconnect switches, exterior lighting standards, and noncurrent carrying metallic enclosures. Use bonding jumpers, grounding bushings, lugs, busses, etc., for this purpose. Connect the equipment ground to the building system ground. Use the same size equipment ground conductors as phase conductors, up through #10 AWG. Use NEC (or CEC where adopted) Table 250.122 for conductor size with phase conductors #8 and larger, if not shown on the Drawings.

6. Clean the contact surfaces of all ground connections prior to making connections.

7. Ductwork: Provide a flexible ground strap, No. 6 AWG equivalent, at each flexible duct connection at each air handler, exhaust fan, and supply fan, and install to preclude vibration.

8. Motors: Connect the ground conductor to the conduit with an approved grounding bushing, and to the metal frame with a bolted solderless lug. Bolts, screws and washers shall be bronze or cadmium plated steel.

9. Building grounding system resistance to ground shall not exceed 25 ohms unless otherwise noted and should be confirmed by testing.

D. Line Voltage and Low Voltage Power Supplies to all Mechanical Equipment Including Plumbing, Heating and Air Conditioning Units:

1. An electric power supply, including conduit, any necessary junction and/or outlet boxes and conductors and connection shall be furnished and installed by the Contractor for each item or mechanical equipment.

2. Power supplies to individual items of equipment shall be terminated in a suitable outlet or junction box adjacent to the respective item of equipment, or a junction box provided by the manufacturer or the equipment and directed by the Mechanical Contractor. Allow sufficient lengths of conductor at each location to permit connection to the individual equipment without breaking the wire run.

3. The location of all conduit terminations to the equipment is approximate. The exact location of these conduit terminations shall be located and installed as directed by the Mechanical and Plumbing Contractor.

4. Provide power supplies to all plumbing and mechanical equipment, including but not limited to, equipment furnished and installed by Owner or Contractor such as heating and air conditioning equipment, pumps, boilers, auto valves, water coolers, trap primers etc. The installation shall produce a complete and operable system.

5. Unless otherwise noted, the Contractor shall furnish and install all conduit, boxes, wires, etc., for line voltage wiring and low voltage wiring.

6. It is the Contractor's responsibility to verify with the drawings of other trades regarding the extent of his responsibility for mechanical equipment. The bid must include a sum sufficient to cover the cost of the installation.

7. The location of all power supply connection and/or terminations to the mechanical equipment is approximate. The exact locations of these terminations shall be verified with other trades during construction.

E. Prefabricated Equipment: Installation of all prefabricated items and equipment shall conform to the requirements of the manufacturer's specifications and installation instruction pamphlets. Where code requirements affect installation of materials and equipment, the more stringent requirements, code or manufacturer's instructions and/or specifications, shall govern the work.

F. Firestopping:

1. The Contractor shall be responsible for furnishing all material, labor, equipment, and services in conjunction with the selection and installation of a complete, fully functioning, code compliant, UL-listed, fire stop assembly/system(s) as required by project conditions.

2. Each fire stop assembly/system shall have an "F" and/or "T" rating as required by each condition requiring fire stopping. Each fire stop assembly/system shall have a current UL listing, as indicated in the latest edition of the UL Fire Resistance Directory. Contractor shall verify acceptability of all fire stopping methods and system selections with the authority having jurisdiction prior to installation. The Contractor shall install each fire stop assembly/system in accordance with the manufacturer's printed instructions.

3. Each fire stop assembly/system shall be labeled with fire stop manufacturer-furnished label on each side of the fire stopping systems depicting UL # etc.

G. Housekeeping Pads

1. Provide a minimum 3" high housekeeping pad above finished floor/finished grade for all floor-mounted switchgear, switchboards, distribution boards, transformers, motor control centers, etc., flush with the face of the equipment. Located in mechanical central plant(s), other mechanical spaces, and located outdoors, pads shall be flush with the face of the equipment. Confirm pad dimensions with local inspector prior to forming pad to ensure any local code interpretations/conditions are met regarding housekeeping pads.

2. Unless otherwise noted above, provide a minimum 1-1/2" high housekeeping pad above finished floor/finished grade for all interior floor-mounted switchgear, switchboards, distribution boards, transformers, motor control centers, transfer switches etc., flush with the face of the equipment. All housekeeping pad heights are as measured from finished floor or grade. Confirm pad dimensions with local inspector prior to forming pad to ensure any local code interpretations/conditions are met regarding housekeeping pads.

3. Provide a 1-1/2" high housekeeping pad above finished floor/finished for service equipment. Prior to pad rough-in, Contractor shall verify serving utility company's maximum meter height requirements and, if necessary, adjust height of housekeeping pad to comply with those requirements. In indoor applications, the pad shall be flush with the face of the switchgear. In outdoor applications, the housekeeping pad shall extend a minimum of 4 feet from the front of switchgear/switchboard’s weatherproof enclosure. Confirm pad dimensions with local inspector prior to forming pad to ensure any local code interpretations/conditions are met regarding housekeeping pads.

4. All housekeeping pads located in, on or attached to a building shall be seismically braced/connected to the building structure.

END OF SECTION

SECTION 26 31 00

PHOTOVOLTAIC SYSTEM

PART 1 GENERAL

1.1 INTRODUCTION

A. It is the intent of these specifications to ensure that the PV systems are designed, engineered, and installed consistent with all National, State, and local codes and standards.

B. At a minimum the system shall consist of the supply and installation of an array of photovoltaic modules, mounting structure, terminal box(es), quick-connect electrical connectors, DC wiring, DC disconnect, grid connected inverter, AC disconnect, AC wiring, all metering equipment, a data acquisition and monitoring system (DAS) and a connection to the facility's electrical system.

C. All work associated with preparing the site and building for the installation shall be included.

D. The contractor shall review all drawings that are associated with the construction of the facility. Contractors bid submittal shall account for all existing and proposed conditions in the base bid/price.

1.2 STANDARDS

A. It is the intent of these specifications to ensure that the PV systems are designed, engineered, and installed consistent with and adhere to any and all currently adopted versions of the International Building Code, applicable utility rules and tariffs, and any and all technical and installation specifications and guidelines, to include the following:

1. ASCE /SEI 7-16 - Minimum Design Loads for Buildings and Other Structures.
2. IBC - International Building Code, as amended by the State of Illinois
3. NEC National Electrical Code (NFPA 70), as amended by the State of Illinois
4. IFC– International Fire Code, as amended by the State of Illinois
5. IEEE 519 - Recommended Practices and Requirements for Harmonic Control in Electrical Power Systems.
6. IEEE 929 - Recommended Practice for Utility Interface of Photovoltaic (PV) Systems.
7. IEEE 1262 - Recommended Practice for Qualification of Photovoltaic (PV) Modules - Description.
8. IEEE 1374 - Guide for Terrestrial Photovoltaic Power System Safety.
9. NABCEP - North American Board of Certified Energy Practitioners.
10. NEMA 3R - Industrial Enclosures.
11. NEMA 4 - Enclosures Constructed for either Indoor or Outdoor Use.
12. NRTL - Nationally Recognized Testing Laboratories.
13. OSHA - Occupational Health and Safety Administration, United States Department of Labor.
14. UL 1703/61730 - Flat-Plate Photovoltaic Modules and Panels.
15. UL 1741 SA - Inverters, Converters, Controllers and Interconnection System Equipment for Use with Distributed Energy Resources.
16. DSA IR 16-8 "Solar Photovoltaic and Thermal Systems Review and Approval Requirements".

PART 2PRODUCTS

2.1 PROPOSAL

A. The base bid shall include the contractors final and all-inclusive cost for a turn-key installation.

B. All installations shall meet or exceed OSHA requirements for equipment access.

C. Submittals/information due with bid:

D. PV module data sheets – including the manufacturer's warranty data.

E. Inverter data sheets – including the manufacturer's warranty data.

F. Mounting system type

G. Proposed schedule to meet the proposed installation date and allowed hours of work per other portions of this RFP.

H. Company experience, relevant previous installations, and references.

I. Summary of Key Personnel.

J. Summary of any insurance coverage limits as requested.

K. Acknowledgement of any site access restrictions noted in the RFP.

L. Any documentation indicating compliance with any financial requirements per other portions of the RFP.

PART 3 SUBMITTALS

A. Shop Drawings: Include photovoltaic module structural supports, solar module controls sequences, and instrument mounting and interconnections and all other components, part and pieces required to complete the function assembly. Where applicable, include pre-fabricated assemblies such as inverter skids or racking assemblies, and shop drawings for foundations or other support structures.

B. Product Data: Include detailed information for components of the solar energy system.
   1. Wiring.
   2. DC-AC Inverter.
   3. Solar Storage Battery Option, where applicable.
   4. Solar Modules.
   5. Instrumentation.
   6. Switch gear.
   7. DC and AC disconnects, where applicable.
   8. Combiner boxes, where applicable.
   9. Rack mounting system.
   10. Monitoring systems, including appropriate interfacing with existing facility data collection systems.

C. Operation and Maintenance Solar Energy Systems Data Package:
   1. Safety precautions.

2. Operators restart.
3. Startup, shutdown, and post-shutdown procedures.
4. Normal operations.
5. Emergency operations.
6. Environmental conditions.
7. Preventative maintenance plan and schedule.
8. Troubleshooting guides and diagnostics techniques.
9. Wiring and control diagrams.
10. Maintenance and repair procedures.
11. Removal and replacement instructions.
12. Spare parts and supply lists.
13. O&M submittals data.
14. Parts indemnifications.
15. Testing equipment and special tool information.
16. Warranty information.
17. Testing and performance data.
18. Contractor information.

D. Closeout Submittals:
1. Posted operating instructions for solar photovoltaic energy system; provide for wiring identification codes and diagrams of solar photovoltaic systems, operating instructions, control matrix, and troubleshooting instructions.
2. Two (2) copies of the owner's manual – including the O & M information with recommended maintenance including cleaning instructions for the PV panels.
3. One on-site training session for the entire facility staff focusing on safety and for facility maintenance staff focusing on maintenance and safety.
4. Record drawings showing the final placement of all panels, power optimizers, connections, and conduit placement and single-line/riser diagrams.
5. Start-up procedure checklists and measurements.
6. All warranties.
7. Coordination with Commissioning Agent on system functionality.

PART 4 EXECUTION

4.1 GENERAL

A. All equipment and materials shall be suitable for the environment in which they are to be installed. All materials that are used outdoors shall be sunlight and UV resistant. All Balance of Systems (wiring, components, conduits, and connections) must be suited for conditions for which they are to be installed.

B. Materials shall be designed to withstand the temperatures to which they are exposed.

C. Dissimilar materials shall be isolated from one another using non-conductive shims, washers, or other methods.

D. Metals shall be hot dipped galvanized steel or anodized aluminum.

E. Aluminum shall not be placed in direct contact with concrete materials.

F. Only 18/10 or better stainless steel fasteners shall be used.

G. Structural members shall be corrosion resistant aluminum, 6061 or 6063.

H. All electrical conduits shall be galvanized and painted if exposed.

I. All electrical equipment shall be rated for the current and voltage ratings necessary for the application.

J. All required over-current protection devices will be included in the system and accessible for maintenance. Each shall have trip ratings no greater than the de-rated amperage of the conductor it protects.

PART 5 PV MODULES

A. All modules shall meet or exceed the requirements of IEEE Standard 1262 and UL Standard 1703/61730.

B. Thin-film PV modules will not be considered.

C. PV modules using Cadmium are not approved.

D. Crystalline silicon flat-plate PV modules are acceptable.

E. See drawings/cut sheets for the basis of design module. Any deviations from this module wattage/performance must have documentation substantiating the desired kW requirement is met.

PART 6 MOUNTING SYSTEM

A. It is the Contractor's responsibility to ensure that the special requirements of each area are completely understood prior to providing a Bid.

B. Manufacturers deferred submittals shall be the responsibility of the contractor.

C. Any custom structural steel racking system not UL listed or identified to bond PV modules frames to the racking shall be electrically bonded where the components are mechanically attached.

D. Refer to structural drawings for canopy framing. Structural engineering is not included in the Electrical PV design scope of work.

PART 7 INVERTER(S)

A. The inverter(s) shall be sized so it can operate the PV arrays at maximum power for the coldest, hottest, and optimal array operating temperatures based upon the PTC wattage.

B. Inverters must comply with IEEE 929-2000 – "Recommended Practice for Utility Interface of Photovoltaic Systems" and UL 1741 SA – "Standard for Static Inverters and Charge Controllers for use in Photovoltaic Systems". Inverters shall be factory tested for performance, and results shall be included in the O & M manual.

C. The output of the system shall not exceed the harmonic distortion levels as specified in IEEE 519.

D. The inverter must be rated for outdoor use with safety enclosure and cover protection.

E. Installation shall meet all applicable UL 1741, IEEE Standard 929-2000 and Standard 519, NEC codes, and the latest applicable ANSI and FCC standards and addenda dated prior to the award of the purchase order for this procurement.

F. See drawings and data sheets for the basis of design inverter selection. Any deviations from this inverter and its performance must have documentation substantiating the desired kW requirement is met.

7.2 METERING, MONITORING, DATA ACQUISITION SYSTEM, AND WEATHER STATION

A. The inverter is used in utility-interactive grid-tied applications, comprised of three key elements:
   1. Inverter
   2. Energy Communication Unit (ECU)
   3. Energy Monitor and Analysis (EMA) web-based monitoring and analysis system

B. The following environmental sensors are optional additions available to the client:
   1. PV module temperature
   2. Dry-bulb temperature
   3. Plane of array solar irradiation

C. Any additional DAS shall include the following:
   1. a data-logger, network interface device for data retrieval, NEMA 4 enclosure
   2. 5-years of monitoring and hosting service on a secure website.
   3. Meters shall be provided and installed with revenue grade Interval Data Recording (IDR) meters complete with industry standard telemetry for communication with Ethernet services. The contractor will also provide a connection to the building's Energy Management System (EMS) for the purposes of metering, monitoring and data collection of solar production as required by the client. Meters must connect to a monitoring/data collection recording solar production through Time of Use (TOU) increments applicable to the local utility standards, with a minimum 15 minute intervals.

7.3 BATTERY ENERGY STORAGE SYSTEM: NOT APPLICABLE

PART 8 AC DISCONNECT

A. AC Disconnects shall be 600V rated (for a 480V 3-phase service).

B. Enclosures shall be steel or fiberglass with a NEMA 1/NEMA 3R (or better) as required. Enclosures shall be painted to match surroundings when visible.

C. When required by Distribution Provider's operating practices, furnish and install a ganged, manually-operated isolating switch (or a comparable device mutually agreed upon by Distribution Provider and Engineer) near the Point of Interconnection to isolate the Generating Facility from Distribution Provider's Distribution or Transmission System. The device must allow visible verification that separation has been accomplished (must meet the local Utility Company requirements) and shall include markings or signage that clearly indicates open and closed positions.

D. Disconnects shall be by Cooper/Crouse Hinds, Eaton or equal.

PART 9 WIRE/FUSES

A. Wiring shall be appropriately rated Photovoltaic Wire type as manufactured by General Cable or equal.

B. All other wiring shall be THHN/THWN type as manufactured by General Cable or equal.

C. DC fuses shall be KLKD type fast acting fuses.

PART 10 GENERAL MATERIAL AND INSTALLATION REQUIREMENTS

A. All work shall be coordinated with the facility staff to ensure minimal impact on the Facility's operation.

B. All existing facilities that are affected by the installation of PV equipment shall be moved, modified, and replaced to the owner's standards.

C. The installation shall be completed in a "workman like manner." The area shall be kept clean and free of obstructions at all times.

D. The installation shall be completed per the manufacturer's installation manual.

E. The installation shall be completed without affecting existing construction.

F. All electrical connections and terminations shall be fully tightened, secured, and strain relieved as appropriate.

G. All mounting equipment shall be installed to the manufacturer's specifications.

H. All cables, conduit, exposed conductors, and electrical boxes shall be secured and supported according to code requirements.

I. All national and local electric and building code requirements shall be met.

J. All applicable environmental regulations shall be met.

K. Contractor shall meet with the owner prior to start of work and daily during installation to coordinate activities and minimize interruption to Operations.

L. The bidder must provide a minimum of 120 hours' notice to the owner prior to any shutdown.

M. All series connected strings of modules must include a series fuse as required by UL and NEC to prevent wiring to other system components. Parallel connections of modules in individual source circuits are not permitted. Parallel connected cells within individual modules are allowable as long as the module listing allows for the series fuse required for this configuration.

N. System switching and metering equipment shall have convenient access for resetting or repair during electrical outages, and regular monitoring for data retrieval.

O. Systems shall be designed and installed using UL or ETL listed components, including mounting systems.

PART 11 SYSTEM ELECTRICAL

A. Electrical construction shall meet all National, State, and local electric codes. All systems must be installed in accordance with all applicable requirements of local electrical codes and the National Electrical Code (NEC), including but not limited to Article 690, “Solar Photovoltaic Systems” and Article 705 – “Interconnected Electrical Power Production Sources”.

B. The modules shall be interconnected using cable assemblies. The pigtails shall be quick-connect electrical wiring connections rated for the application.

C. All wiring shall be copper in type and shall be listed for a minimum operation of 1000 volts and temperature rating of 90 degrees Celsius in wet locations. All current carrying conductors shall be enclosed in conduit, excluding module interconnections and connections from individual module strings to the inverters.

D. The system shall have at least one inverter. Full specifications of each inverter shall be supplied as part of the system design documentation submittal. An isolation transformer shall be part of each system for interfacing to the Owner’s existing electrical system.

E. Interconnection must comply with the serving utility’s interconnection standards for non-Utility Generation. Contractor shall be responsible for installing the complete system to the satisfaction of the serving utility, and all costs to provide an approved interconnection shall be included in the base bid.

PART 12 INSTALLATION STANDARDS

A. The installation shall be completed with a minimum of impact on the environment.

B. System Installation shall conform to Manufacturers’ Installation Manuals and approved project drawings and specifications.

C. Array mounting hardware shall be compatible with the site considerations and environment. Special attention shall be paid to minimizing the risk from exposed fasteners, sharp edges, and potential damage to the modules or support structures. Corrosion resistance and durability of the mechanical hardware shall be emphasized – the use of stainless steel fasteners and aluminum support structures are required. The use of ferrous metals, wood, or plastic components is not acceptable.

PART 13 CALGREEN NONRESIDENTIAL MEASURES: NOT APPLICABLE

PART 14 SYSTEM OUTPUT MEASUREMENT:

A. The Contractor will establish the initial system output to demonstrate that the system is performing as designed, and to establish a baseline to be used for warranty. The system output will be verified on a clear and sunny day after construction of the system has been completed.

B. Prior to inverter startup, voltages will be recorded for each string, each sub-array, and the entire array. Measurements will be recorded and provided to the owner in a clear, tabular format, electronically in a Microsoft Excel spreadsheet. Each voltage measurement will include the following ancillary data: the date; the time of day that the measurement was taken. Contingent of environmental sensors required for the project site, a sample panel

temperature at the time, the dry-bulb temperature at the time, and the solar irradiation at the time shall be documented. The strings that make up each sub-array will be clearly identified on a drawing by number. Refer to the microinverter's requirements for tracking units

C. After inverter startup, current shall be recorded for each string, each sub-array, and the entire array. Measurements will be recorded and provided to the owner in a clear, tabular format, electronically in Microsoft Excel. Each current measurement will include the following ancillary data: the date; the time of day that the measurement was taken. Contingent of environmental sensors required for the project site, a sample panel temperature at the time, the dry-bulb temperature at the time, and the solar irradiation at the time shall be documented. The strings that make up each sub-array will be clearly identified on a drawing by number. Refer to the microinverter's requirements for tracking units

D. Start-up shall be per all manufacturers' instruction.

E. System start-up procedure will be as outlined by the Manufacturer's Installation Manual and the Inverter Manual.

PART 15 PROJECT CLOSEOUT

A. Clean all equipment and PV modules. PV modules shall be brush cleaned with soap and water and rinsed thoroughly.

B. Clean all work areas, removing any debris.

C. The Successful Respondent will also be required to provide a minimum of one (1) training session. Topics to be covered in this training include theory of operation, operating requirements, component descriptions and specifications, maintenance requirements and schedule, safety precautions, an overview of the System Manual and record keeping.

D. Prepare two (2) copies of operating and maintenance manuals in hard cover binders and deliver to the owner. At a minimum the binders shall include:
   1. A complete set of all approved submittals including shop drawings and product literature.
   2. Copy of the owner's manual – including the O & M information with recommended maintenance including cleaning instructions for the PV panels.
   3. Start-up procedure checklists and measurements.
   4. All warranties.

END OF SECTION

SECTION 27 10 00

STRUCTURED CABLING SYSTEM (SCS)

PART 1 - GENERAL

1.1 SCOPE OF WORK

A. The work under this section includes all final design, material, equipment, supplies, labor, testing, and accessories required to furnish and install a complete Structured Cabling System (SCS) as indicated on the drawings and as specified herein. The SCS shall be defined as all cables, equipment, products, etcetera, as indicated on the drawings, and mentioned in these specifications. Please note, for this project, that the SCS encompasses more than just voice and data cabling.

B. It is the intent of the Drawings and Specifications for the Contractor to provide and install a complete, fully operational, and tested system.

C. All miscellaneous system components including, but not limited to, cables, termination equipment, punch blocks, patch panels, ladder racks, backboards, equipment racks, and any other related items shall be furnished and installed complete under this section, such that the system shall perform all functions listed herein in compliance with all the specified requirements.

D. Schedule is paramount to the project's success. With this, the structured cabling Contractor will have to be a team player, continually working with the team to facilitate expeditious design, procurement, and construction processes.

1.2 RELATED WORK, STANDARDS, DOCUMENTS AND PUBLICATIONS

A. Each agency's relative codes, standards, and recommended practices apply to the voice/data cabling systems and their components as specified herein:
   1. American National Standards Institute (ANSI)
      a. ANSI T1.336 Engineering requirements for a universal telecommunications frame
      b. ANSI T1.404 Network and customer installation interfaces – DS3 and metallic interface specification
   2. Building Industry Consulting Service International (BICSI)
      a. Telecommunications Distribution Methods Manual (TDMM) – latest edition.
      b. Customer – Owned Outside Plant Design Manual (CO-OSP) 2004
   3. Electronic Industries Alliance (EIA)
      a. ANSI/TIA/EIA-455-as applicable for measurement and Testing of Fiber Optic Systems
      b. ANSI/TIA/EIA-492-as applicable for specifications for Optical Fibers
      c. ANSI/TIA/EIA-526 Standard Test Procedures for Fiber Optic Systems
      d. ANSI/TIA-568-C.0 Generic Telecommunications Cabling for Customer Premises
      e. ANSI/TIA-568-C.1 Commercial Building Telecommunications Cabling Standard
      f. ANSI/TIA-568-C.2 Balanced Twisted-Pair Telecommunications Cabling Components Standards
      g. ANSI-TIA-568-C.3 Optical Fiber Cabling Components Standard
      h. ANSI/TIA/EIA-606-A Administration Standard for Commercial Telecommunications Infrastructure 2002.
      i. ANSI/TIA/EIA-J-STD-607-A Commercial Building Grounding (Earthing) and Bonding Requirements for Telecommunications 2002

4. Federal Communications Commission (FCC)
   a. FCC Part 68 Rule
5. American Society for Testing and Materials (ASTM)
   a. E814-02 Standard Test Method for Fire Tests of Through-Penetration Fire Stops
6. Insulated Cable Engineers Association (ICEA)
   a. Communications Wire and Cable for Premises Wiring.
7. International Electrotechnical Commission (IEC)
   a. IEC 61935-01 Generic Cabling Systems - Specification for the testing of balanced communication cabling in accordance with ISO/IEC 11801 Part 1: Installed Cabling
   b. IEC 61935-02 Generic Cabling Systems - Specification for the testing of balanced communication cabling in accordance with ISO/IEC 11801 Part 2: Patch Cords and Work Area Cords
8. Institute of Electrical and Electronics Engineers (IEEE)
   a. IEEE 802 Specification for Local Area Networks
9. International Organization for Standardization (ISO)
   a. ISO/IEC 11801 Information Technology – Generic Cabling for Customer Premises 1995 plus Amendments 1 & 2.
10. National Fire Protection Association (NFPA)
    a. ANSI/NFPA-70 National Electric Code 2002(NEC)
    b. ANSI/NFPA-75 Standard for the protection of information technology equipment 2003
11. National Electrical Manufacturers Association (NEMA)
12. Occupational Safety and Health Administration (OSHA)
13. Telecommunications Industry Association (TIA)
    a. ANSI/TIA-569-C Commercial Building Standard for Telecommunications Pathways and Spaces 2003.
    b. ANSI/TIA-758-A Customer-Owned Outside Plant Telecommunications Cabling Standard 2004
14. Underwriters Laboratories Standards (UL)
15. Intetek Testing Services ETL SEMKO (ETL)

B. The Contractor shall be responsible for obtaining and utilizing the latest Architectural, and Electrical plans.

1.3 GENERAL REQUIREMENTS

A. Manufacturer: The term “manufacturer” shall be defined as the company, or group of companies, that produces the products meeting the requirements of Section 2 of this document. The manufacturer shall have a minimum of seven (7) year’s experience in manufacturing products of this type and shall be ISO 9001 Certified. The products, summarized in this specification, shall be supplied by a single manufacturer, except for:
   1. Data racks and other hardware that is not defined as part of the channel test configuration by ANSI/TIA/EIA 568-C.
   2. Fiber Optic Cable and Outside plant (OSP) fiber cable.
   3. Channel solutions consisting of cabling and connectivity hardware independently tested by UL or ETL and that are listed in Section 2 of this document.
   4. Cables manufactured by another manufacturer specifically called out on the drawings.

B. Contractor: The term “Contractor” shall be defined as the company, or group of companies, that installs the products per Section 3 of this document. The Contractor selected to provide the installation of this system shall be certified by the manufacturer in all aspects of design, installation and testing of the products described herein.
   1. The Contractor shall hold a valid State of California C-7 Low-Voltage license, shall have completed at least ten (10) projects of equal scope, shall have been in business of furnishing and installing systems of this scope and magnitude for at least five (5) years, and capable of being bonded to assure the Owner’s Project Manager of performance and

satisfactory service during the guarantee period.

2. The Contractor shall hold all other licenses required by the legally constituted authorities having jurisdiction over the work.
3. All work shall be performed under the supervision of a company accredited by the manufacturer and such accreditation must be presented.
4. The Contractor shall be a manufacturer's authorized/certified installer and warranty station for the equipment offered and shall maintain a fully equipped service organization capable of furnishing adequate repair service to the equipment. The Contractor must be certified by the manufacturer a minimum of 180 days prior to bid opening.
5. The Contractor selected for this Project must adhere to the engineering, installation and testing procedures and utilize the authorized manufacturer components and distribution channels in provisioning this Project.
6. The Contractor shall own and maintain tools and equipment necessary for successful installation and testing of fiber optic cable and Category 6 metallic premise distribution systems and have personnel who are adequately trained in the used of such tools and equipment.
7. The Contractor shall have the capability to produce the AutoCAD documentation as required elsewhere in this specification.

1.4 SUBSTITUTIONS

A. To maintain a high degree of quality assurance, the Contractor shall, without exception, use the parts and supplies as specified on the drawings and in this specification.

B. For any proposed product substitution or when the Contractor intends to include an "or equal" product in the bid pricing, provide a substitution request submittal to the Owner's Project Manager for review no later than fifteen (15) calendar days *prior* to Bid Submittal. This report shall include:

1. Description of how the proposed product(s) will impact meeting the project completion date, indicate item(s) with lead times and expected delivery date(s).
2. Itemized cost comparisons between the proposed product(s) and the listed product(s).
3. Detailed technical analysis of the electrical and mechanical specification differences between the proposed product(s) and the listed product(s).
4. ETL "Verified" or UL "Verified" test lab documentation for the proposed product(s), component(s) and assemblies.
5. Proposed product identification, manufacturer literature (specifications and cut sheets).
6. Name, address and contact information of several similar projects where the proposed product(s) have been used.
7. Name, address and contact information of the proposed product(s) manufacturer's local representative.
8. Sample proposed product(s) manufacturer's warranty.

C. The Owner's Design Team/Project Manager must approve any proposed product(s) substitution item in writing. The Owner's Design Team/Project Manager reserves the right to require a complete sample of any proposed product(s) and may request a sample tested by an independent testing consultant to prove equality. The decision of the Owner's Design Team/Project Manager regarding equality of proposed product(s) items will be final.

D. If a proposed product(s) is given final acceptance by the Owner's Project Manager, the Contractor shall reimburse the Owner's Design Team/Project Manager for the costs to review the proposed product(s) substitution(s), and for any additional engineering charges, and shall pay all charges of other trades resulting from this product(s) use, at no cost to the Owner.

E. It is a mandatory requirement that a single Contractor perform the work described in this specification.

1.5 GENERAL SUBMITTAL REQUIREMENT

A. Submittals shall be presented and formatted per the guidelines in the Division 1 section of this RFP package.

B. All cut sheets shall represent the latest version, part number, and revision of the product. Where multiple products or part numbers appear on a page, a bold arrow or circle shall indicate which product or part numbers are to be used as part of the installation. The submittal shall include all descriptive pages associated with the product, not just the page showing the part number.

1.6 PRE-INSTALLATION SUBMITTAL REQUIREMENTS

A. Within forty-five (45) calendar days after the date of award of the Contract, the Contractor shall submit the following:

B. Submittal Binder: Submit four (4) copies of the complete Submittal Binder to the Owner for review. The binder shall consist of four major sections with each section separated by index tabs. Each page in the binder shall be numbered sequentially and shall be summarized in the index.

1. The first section shall be the "title sheet" which shall include the submittal date, project title and address, name of the Contractor, and name of the Owner.
2. The second section shall contain an index including the page number, product Manufacturer, product part number, product description, and corresponding specification section number or drawing sheet number where that product is referenced. Also listed in the index shall be each item of test equipment to be used to test the optical fiber and copper components. Include all patch cords and other specialized components.
3. The third section shall contain original manufacturer cut sheets for all of the materials that meet the requirements listed in Section 2 of this specification and all materials described on the construction drawings. Also include manufacturer's cut sheets for all testing equipment to be used for completion of the project. All pages shall be numbered sequentially corresponding to the index. On each cut-sheet, provide an indicating arrow next to each part number of proposed material.
4. The fourth section shall contain a Cabling Diagram. The diagram shall be based on the drawings included in the Construction Documents. It shall be updated to show quantities and part numbers for all components including patch panels, cable, conduit, cabinets and equipment racks, splices, splice cases and all other associated components.
5. Failure to comply with any of the requirements listed above may result in the rejection of the entire submittal package.

1.7 POST-INSTALLATION SUBMITTAL REQUIREMENTS

A. Within fifteen (15) calendar days after the completion of work, the Contractor shall submit the following:

B. Record Documentation

1. Final Test Results: Test results for each cable indicating tests performed, results obtained, and values measured. Test results shall be provided in electronic format with the associated application (if required) for viewing.
2. As-Built Drawings: Contractor shall provide a complete set of professionally drafted "E" size (30" x 42"), unless otherwise noted, reproducible bond as-built drawings, generated on AutoDesk AutoCAD 2010 or later.
   a. MPOE, MDF and IDF Room Diagrams (if applicable) - Including:
      1) Cable routing.
      2) Position of all components and apparatus.

3) Detailed layout of the wallfield(s).
4) Labeling plan.

b. Work Area Floor Plans - Including:
1) Detailed cable routes.
2) Labeled workstation locations. Labels to match approved workstation faceplate labels.

c. Cross Connect Documentation - Including:
1) Cross-connect records for all voice, and data devices.

d. Riser Distribution Plan (if applicable).
e. Cable Tray, Conduit, and Raceway Plans (if applicable).
f. Campus Distribution Plan (if applicable).
g. Building Control Plans (if applicable).

C. As-Built Documentation Display in each MPOE, MDF & IDF.

D. Contractor shall install a complete Contractor-provided, professionally drafted as-built floor plan in color in each MPOE, MDF & IDF mounting frame. Each floor plan, generated on AutoDesk AutoCAD 2018 or later and printed in color, shall depict all data, phone, and wireless access point (WAP) jack locations. Also depicted shall be in-building antenna, CCTV camera locations, CATV jack locations, and any other communications outlet cables provided by the SCS Contractor. All jack locations shall be color coordinated with the Owner's labeling scheme as described elsewhere in this specification.

E. Contractor shall provide to Owner two (2) sets of portable USB thumb drives containing all post installation submittals.

F. Contractor shall present to Owner all warranty Warranty Documents per Warranty Specifications Sections. Warranty shall commence after final acceptance of System by Owner.

1.8 GENERAL SYSTEM WARRANTY

A. Prior to Owner acceptance, the Contractor shall provide to the Owner's Project Manager, a manufacturers product and performance warranty. This will require a submittal of the required pre-job certification registration forms as well as the required project closing information. The Owner will only acknowledge acceptance upon submittal of a valid manufacturer's warranty.

B. The warranty shall commence from the date of the Owners final written acceptance of the completed project.

C. All conditions for obtaining the manufacturers warranty shall be the sole responsibility of the Contractor.

D. The Contractor shall maintain a competent service organization and shall, if requested, submit a service maintenance agreement to the Owner after the end of the guarantee period.

E. A ten (10) year Extended Product Warranty and Application Assurance for the voice/data/wap wiring system shall be provided as follows:
1. 10 Year Extended Product Warranty
a. The 10 Year Extended Product Warranty shall ensure against product defects, that all approved cabling components exceed the specifications of ANSI/TIA/EIA 568-C and ISO/IEC 11801, exceed the attenuation and NEXT requirements of ANSI/TIA/EIA 568-C and ISO/IEC 11801 for cabling channels, that the installation will exceed the loss and bandwidth requirements of ANSI/TIA/EIA 568-C and ISO/IEC 11801 for fiber channels, for a ten (10) year period. The warranty shall

apply to all passive SCS components.

b. The 10 Year Extended Product Warranty shall cover the replacement or repair of defective product(s) and labor for the replacement or repair of such defective product(s) for a ten (10) year period.

2. System Certification

a. Upon successful completion of the installation and subsequent inspection, the Owner's Project Manager shall be provided with a numbered certificate, from the manufacturing company, registering the installation.

PART 2 - PRODUCTS

2.1 ACCEPTABLE MANUFACTURERS

A. All equipment listed herein will be by:

1. Structured Cabling System (SCS) Category 6: CommScope Uniprise, BerkTek/Leviton, or AMP "Netconnect".
2. Cabinets, Racks, and Ladder tray: Chatsworth, or Cooper B-line.
3. Horizontal and Vertical Wire Management: Chatsworth, Panduit, or Hubbell.
4. Riser and OSP Fiber Optic Cable: AMP, BerkTek, or Corning.
5. Riser and OSP Multipair Copper Cable: Superior Essex, BerkTek, or General Cable.
6. Protectors: Circa, Porta Systems or Marconi.

B. It is the responsibility of the bidder to ensure that the proposed product meets or exceeds every standard set forth in these specifications and the equipment's technical data sheets.

C. The functions and features specified are vital to the operation of this facility. Therefore, inclusion of a component's manufacturer in the list of acceptable manufacturers does not release the Contractor from strict compliance with the requirements of this specification.

2.2 OUTLETS

A. Faceplates

1. All Faceplates shall be available in single, duplex, triplex, quadplex, or sixplex arrangement in a single gang configuration.
2. Surface mount boxes shall be available in single, dual, quad, sixplex and twelveplex configuration.
3. Modular furniture faceplates shall be available in single, dual, triple and quad configuration for the Owner's modular existing and/or new modular furniture. Faceplates shall be flush-mounted in the modular furniture. Surface mounted boxes/faceplates are unacceptable. The Contractor is responsible for coordinating with the Owner's modular furniture Contractor to determine faceplate requirements. The Contractor shall provide and install all parts/fittings necessary to meet the requirements of this section.
4. Wall mounted phone jack faceplates shall be single gang configuration, constructed of stainless steel and have two standard phone mounting posts located above and below the jack opening.

B. Communications outlets shall consist of one, two or three gang utility outlet boxes plates equipped with 8-pin modular (RJ-45) jacks utilizing T568B wiring (unless otherwise noted). All outlet cabling shall terminate on termination blocks at their associated Minimum Point of Entry (MPOE), Main Distribution Frame (MDF), Intermediate Distribution Frame (IDF) Rooms, or as otherwise indicated on the drawings.

C. Unless otherwise noted on the floor plans, or within this document, all data wall outlets for 23 AWG copper cable shall be:

1. 8-position/8-conductor modular outlets for data or voice.
2. Insulation displacement.
3. Support Universal applications in a multi-vendor environment, accepting modular RJ-45 plugs for data or voice outlets.
4. Provide with blank module inserts for all unused module locations. Jack module arrangement is shown on the drawings. Provide color-coded inserts at each outlet, termination blocks, and at patch panels.

D. Category 6 Gigabit outlets
1. All Category 6 outlets shall meet or exceed Category 6 transmission requirements for connecting hardware, as specified in ANSI/TIA/EIA 568-C Commercial Building Telecommunications Cabling Standard and be part of the UL LAN Certification and Follow-up Program.
2. The Category 6 outlets shall be capable of being in a modular patching situation or as a modular telecommunication outlet (TO) supporting current 10Base-T, Token Ring, 100 Mbps TP-PMD, 155 Mbps ATM, 622 Mbps ATM using parallel transmission schemes and evolving high-speed, high-bandwidth applications, including Ethernet, 1000BASE-T and 1.2 Gbps ATM.
3. The Category 6 outlets shall be capable of being installed in any modular faceplate, modular patch panel, frame, or surface-mounted box without special couplings or adapters.
4. The Category 6 outlets shall have improved pair splitters and wider channel for enhanced conductor placement. The outlet shall also have a low-profile wire cap, which protects against contamination and secures the connection. Multicolored identification labels shall be available to assure accurate installation.
5. Product Specification: Uniprise (UNJ600-xx), Leviton eXtreme (61110-R*6), or AMP SL Series (1375055-x) Category 6.

2.3 STATION CABLE

A. Category 6 unshielded twisted pair (UTP) cables shall extend between the station location and its associated TC and consist of 4 pair, 23-gauge solid insulated wire, and shall terminate on 8 pin modular jacks at each outlet and patch panels.

B. Category 6 UTP, 4 Pair
1. The high-performance Category 6 UTP cable shall be of the traditional round design with Mylar separator tape between pairs.
2. The cable jacket shall comply with Article 800 NEC for use as a plenum or non-plenum cable. The 4 pair UTP cable shall be UL Listed type CMP (plenum) or type CM/G (non-plenum).

C. All Category 6 high performance cables shall meet or exceed the following:
1. Electrical Characteristics:

Mutual Capacitance	56 nF/m at 1kHz
Characteristic Impedance	(± 3%) of 100 Ohms 1-550 MHz
DC Resistance Max	7.61 Ohms/100m)
Positive ACR	To 400 MHz-km

2. Physical specifications:

	Non – Plenum	Plenum
Conductor size	23AWG	23AWG
Diameter	<.25” nominal	<.24” nominal
Operating temperature	-4 F to 140 F	-4 F to 140 F

3. Product Specification: Commscope Uniprise Ultrapipe Category 6 (6ECMR/6ECMP), Berktek Lanmark 1000 category 6 (100324xx/100320xx), or AMP Netconnect Category 6 (219560-x/219567-x) 4 pair UTP cable.

2.4 MODULAR PATCH PANEL SYSTEM

A. When shown on the drawings, the termination block shall support the appropriate emerging high-bandwidth applications, including 1 Gbps Ethernet, potentially 1.2 Gbps ATM and 2.4 Gbps ATM, Multi-Tasked Split Screen Computing, Virtual Holographic Video Conferencing, Instant Access Telemedicine, 3D CAD/CAM Engineering, and Internet-Intranet Communications/Commerce, as well as all 77 channels (550 MHz) of analog broad band video, and facilitate cross connection and inter connection using modular patch cords.

B. All Modular jack panels shall be wired to ANSI/TIA/EIA 568-C using T568B wiring.

C. The wiring block shall be able to accommodate 23 AWG cable conductors.

D. The Category 6 modular jack panels shall meet or exceed the Category 6 standards requirements in ISO/IEC 11801 and ANSI/TIA/EIA and shall be UL Listed.

E. A 110 IDC termination block shall provide for the termination of horizontal, equipment, or tie cables.

F. Product Specification: Uniprise (UNP610-xxP) Cat 6 patch panel, Leviton (69586-C24 or C48) Category 6 patch panel, or AMP (137501x-x) Category 6 SL series patch panel.

2.5 CATEGORY 6 – PATCH/STATION CORDS

A. Provide Category 6 Modular Patch/Station cords for each assigned port on the patch panel and for each outlet in the station locations. All cords shall conform to the requirements of ANSI/TIA/EIA 568-C Standard, Horizontal Cabling Section. Cords shall be equipped with an 8-pin modular connector on each end and shall conform to the length(s) specified. All cords shall be wired to T568B standards. All cords shall be factory-built by the cabling manufacturer with a SlimLine boot at both ends. Fabrication of cords in the field is prohibited.

B. All patch cords shall exceed ANSI/TIA/EIA and ISO/IEC Category 6/Class E specifications. Patch cords shall be available in stranded or solid conductor in lengths up to 50 feet.

C. The patch cord shall have built-in exclusion features to prevent accidental polarity reversals and split pairs.

D. UL Verified for ANSI/TIA/EIA 568-C Electrical Performance

E. Miscellaneous:
   1. UL Listed for Fire Safety
   2. ISO 9001 Certified Manufacturer
   3. FCC Compliant

F. Quantities: Provide two (2) patch cords for each Cat-6 cable installed, or as shown on drawings. Verify final colors and lengths with Owner in the field prior to ordering materials.

G. Product Specification: Uniprise (UNC6-xx-xF) Category 6 modular patch cord, Leviton (60560-xx*) Category 6 patch cord, or AMP Category 6 patch cable assemblies (2198xx-x).

2.6 FIBER OPTIC CABLING

A. Provide fiber optic cabling when shown on the drawings.

B. Fiber optic cabling shall be provided between facilities and furnished with the quantity of fibers as designated on the contract drawings.

C. All fiber in a cable run shall be from the same manufacturer and shall be the same type. A mix of fibers from different manufacturers may not be used.

D. Multimode Fiber Specifications:
1. All fiber optic cables within the premises shall use multimode, graded-index fibers with 50-micron cores only.
2. Fibers must comply with ANSI/TIA/EIA 492 specifications and ISO/IEC 11801 standards.
3. Fibers will have dual wavelength capability, transmitting at 850 and 1300nm ranges.
4. Shall be designed to support 10Gb/s applications for 300 meters.
5. Specifications Outside Plant Cables:
   a. Maximum attenuation @ 850/1300 nm 3.0/1.0 dB/km. The core shall be filled with a water-blocking compound and be suitable for underground conduit, direct burial or aerial applications.
6. Product Specification: Uniprise Multimode LazrCORE 300, Berktek GIGAlite-10, or AMPXG 10G 50/125 micron fiber optic cable.

Core	50±2.5 μm
Performance	Laser optimized 10 Gigabit to 300 meters
Core/Cladding Concentricity Error:	<3.0 μm
Numerical Aperture:	0.200 ± 0.015
Cladding diameter:	125 μm ± 1 μm
Cladding Non-Circularity:	≤1.0%
Minimum Tensile Strength:	100,000 psi
Fiber Minimum Bending Radius:	.75 in. (1.91 cm)
Cable Minimum Bending Radius: During Installation: After Installation:	 20 times cable diameter 10 times cable diameter
Operating Temp. Range:	32°F to 122°F (0°C to 50°C)
Storage Temp. Range:	-40°F to 149°F (-40°C to 65°C)
Minimum Bandwidth:	2000 MHz at 850 NM 500 MHz at 1300 NM

E. Single Mode Fiber specifications
1. Fibers must comply with ANSI/TIA/EIA 492 specifications and ISO/IEC 11801 standards.
2. All fiber shall be color coded to facilitate individual fiber identification.
3. Fiber will have D-LUX® coating or approved equivalent to ensure color retention, minimize microbending losses and improve handling. The coating shall be mechanically strippable.

Fiber Attribute	Depressed Cladding	Matched Cladding
Cladding Diameter	125.0 ± 1.0 μm	125.0 ± 1.0 μm
Cladding Non-Circularity	≤ 1.0%	≤ 1.0%
Colored Fiber Diameter	250 ± 15 μm	250 ± 15 μm
Core Diameter	8.3 μm	8.3 μm
Index of Refraction	0.37%	0.33%
Core/Cladding Concentricity	≤0.8 μm	≤0.8 μm

Mode Field Diameter	8.8 ± 0.5 μm @ 1310 NM	9.3 ± 0.5 μm @ 1310 NM
Minimum Proof Strength	100,000 psi	100,000 psi
Maximum Attenuation	.40 dB/km @ 1310 NM .30 dB/km @ 1550 NM	.40 dB/km @ 1310 NM .30 dB/km @ 1550 NM

Fiber Attribute	True Wave
Cladding Diameter	125.0 ± 1.0 μm
Cladding Non-Circularity	≤ 1.0%
Colored Fiber Diameter	250 ± 15 μm
Core Diameter	8.3 μm
Index of Refraction	0.33%
Maximum Attenuation	.40 dB/km @ 1310 NM .30 dB/km @ 1550 NM

4. Sheath Construction:
   a. Outside Plant Cables: Corning Single mode Loose-tube Dielectric Sheath Cables with buffer/fan-out kits as required. Equal by Berk-Tek or Corning.
   b. Building Cables: Plenum Rated, Riser Rated.
5. Product Specification: CommScope Uniprise, Berktek, or AMP.

2.7 FIBER PATCH CORDS

A. Fiber patch Cords shall be available in either Singlemode or Multimode.

B. Construction shall be either 3.0 mm cordage or 1.6 mm cordage.

C. Connectors shall be available in Duplex LC, and Duplex SC.

D. Use only factory manufactured patch cords. Field terminated patch cords are not acceptable.

E. Quantity shall equal 50% of strand count of each terminated fiber optic cable (e.g. 12-strand fiber cable will require 6 total duplex patch cords, 3 at each end).

F. Product Specification: Uniprise, Leviton or AMP duplex patch cords, 1-meter, 3-meter lengths based on Owner's requirements. Contractor to confirm in field with Owner prior to ordering materials.

2.8 FIBER CONNECTOR ENCLOSURE/FIBER PATCH PANEL

A. Fiber Patch Panels/Enclosures (when shown on drawings): The Combination Shelf is a wall or frame mounted unit that terminates, provides cross connection, interconnection, splicing and fiber identification for up to 48 fibers. The shelf will provide protection from mechanical stress on the cable and fibers and from macro-bending losses.
   1. The shelf shall be wall or rack mountable depending on the location requirement. The units must fit into a 19" wide frame arrangement and have a jumper routing trough.
   2. When wall mounted the shelf shall consist of a modular enclosure with front access and can be fully administered from the front. When rack mounted the shelf shall consist of a modular enclosure with front and rear access and can be fully administered from the front and rear. The unit shall slide out to allow access from the top. Include splice organizers and fiber breakout kits as required.
   3. The shelf shall have a translucent, removable cover over the connector panels. The connector panels shall snap into the front of the shelf and accommodate ST, SC, or LC connectors as required.

4. Miscellaneous:
   a. UL Listed for Fire Safety
   b. ISO 9001 Certified Manufacturer
5. Product Specification: Uniprise RFE-FXD, RFE-FXG; Leviton OPT-X 1U, 2U 4U rack mounted enclosures; AMP 1U, 2U, 3U, 4U rack mounted enclosures.

2.9 FIBER OPTIC CONNECTORS

A. Fiber Optic Connectors: Provide a field installable singlemode or multimode type connectors to terminate fiber optic cables from cable-to-cable, cable-to-equipment or equipment-to-equipment, and to make jumpers. See drawings for type of connector (LC, or SC). If the connector type is not specified on the drawings, SCS Contractor shall include all costs in base bid for the most expensive connector installation.
   1. The connector must:
      a. Be field installable
      b. Be capable of mounting on either 0.9 mm buffered fiber or on 3.0-mm cordage.
      c. Have a locking feature to the coupler and assure non-optical disconnect.
      d. Have an installed attenuation loss of less than .75dB.
      e. Miscellaneous:
         1) UL Listed for Fire Safety
         2) ISO 9001 Certified Manufacturer
      f. Product Specification: Uniprise LC, SC; Leviton LC, SC; AMP LC, SC.

2.10 COPPER CABLING

A. Outside Plant Copper Cables (when shown on drawings)
   1. All voice grade wire and cable placed in the outside environment shall be solid, twisted pair, and multi-conductor. The copper twisted pairs shall have a mutual capacitance at 1kHz of 15.7 nF/1,000 ft. The cable shall be resistant to mechanical damage, lightning or damage from wildlife.
   2. The aerial air core cable shall be a self-supporting or lashed cable consisting of plastic-insulated solid conductors covered by a plastic core wrap and surrounded by an inner polyethylene jacket, a corrugated aluminum shield, a corrugated steel wrap and a bonded polyethylene jacket (PASP).
   3. The buried or underground cable shall have an aluminum steel polyethylene (ASP) sheath and a core of solid-copper conductors, dual insulated with foam skin and plastic, surrounded by FLEXGEL III filling compound.

B. The multi-pair copper cables shall meet the following specifications:
   1. Physical Specifications:

Gauge	24 AWG
Pair Size	25 to 1,800

   2. Electrical Specifications:

DC Resistance	27.3Ω/1000 ft (8.96Ω/100m), maximum
Mutual Capacitance (@ 1kHz)	15.7 nF/1000 ft (5.15 nF/100m) (25 pair), maximum
Impedance	100 Ω (25 pair)

Buried/Underground Cable Attenuation (dB/1,000 ft [305m]):	
at 772 kHz	5.6 (25 pair), maximum

at 1.0 MHz	6.4 (25 pair), maximum

Aerial Cable Attenuation (dB/1,000 ft [305m]):	
at 772 kHz	5.9 (25 pair), maximum
at 1.0 MHz	6.7 (25 pair), maximum

3. ISO 9001 Certified Manufacturer: Systimax or listed equal
   a. Buried/Underground: CSI ANMW
   b. Aerial: CSI BKMP (self support), CSI BKMA (lashed), CSI BKMH (lashed)

C. Copper Riser Cables: Shielded or unshielded 24 AWG multi-pair copper cables shall be used as the vertical riser cables when identified on the plan drawings. The cable shall support voice, data and building service applications. The bending radius and pulling strength requirements of all backbone cables shall be observed during handling and installation. The multi-pair copper cables shall be in plenum or riser rated form and placed in conduit as required.
   1. Shielded: The shielded cable, 200 pair or more, shall consist of solid-copper conductors insulated with expanded polyethylene covered by a PVC skin, be conformance tested to meet ANSI/TIA/EIA 568-B for Category 3 cables, be UL and Listed as CMR. The core shall be overlaid with a corrugated aluminum sheath, which is adhesively bonded to an outer jacket of PVC plastic to form an ALVYN sheath. The copper riser cable shall meet or exceed the following electrical specifications listed below:
      a. Electrical Specifications:

Average DC Resistance	26.5Ω/1,000 ft (8.7Ω/100m), maximum
Average DC Resistance Unbalance	1.7%, maximum
Mutual Capacitance @ 1kHz	16 nF/1000 ft (5.25 nF/100 m), maximum
Capacitance Unbalance (pair to ground)	201pF/1,000 ft (65.94 pF/100m) maximum

      b. Attenuation (dB/100 m [328 ft.]:

Frequency	Attenuation (Max.)
1.00 MHz	2.3 dB
4.00 MHz	4.9 dB
10.00 MHz	8.5 dB
16.00 MHz	12 dB

      c. Worst Pair Near-End Crosstalk (NEXT) dB/100 m [328 ft]:

Frequency	Pair-To-Pair NEXT (Max.)
1.0 MHz	13.8 dB
4.0 MHz	11.2 dB
10.0 MHz	10.2 dB
16.0 MHz	9.2 dB

      d. The PVC sheath shall have improved frictional properties, allowing it to be pulled through conduit without the use of lubricants.
      e. The cable shall be available in 25, 50, 100, 150, 200, 300, 400, 600, 900, 1200, 1500, and 1800 pair counts.
      f. Miscellaneous:
         1) UL Listed for Fire Safety
         2) ISO 9001 Certified Manufacturer

g. Product Specification: AMP or Superior/Essex ARMM type or listed equal.

2. Non-shielded: The non-shielded non-plenum cable shall consist of 24-AWG solid-copper conductors insulated with color coded PVC, 25 pair cable shall be UL Verified to ANSI/TIA/EIA 568-B for Category 3, 25 to 100 pair shall be conformance tested to meet ANSI/TIA/EIA 568-B for Category 3 cables. The non-shielded cable shall be available in 25, 50, 75 and 100 pair. The copper cable shall meet or exceed the following electrical specifications listed below:

a. Electrical Specifications:

Maximum DC Resistance	28.6 Ω/1,000 ft (9.4 Ω/100m)
Maximum DC Resistance Unbalanced	5%
Maximum Capacitance Unbalanced (pair to ground)	1,000 pF/1000 ft. (328 pF/m)
Mutual Capacitance @ 1kHz	18 nF/1000 ft (5.9 nF/100 m), maximum

b. Attenuation (dB/100 m [328 ft.]):

Frequency	Attenuation (Max.)
1.00 MHz	2.3 dB
4.00 MHz	4.9 dB
10.00 MHz	8.5 dB
16.00 MHz	12 dB

c. Worst Pair Near-End Crosstalk (NEXT) dB/100 m [328 ft]:

	Pair-To-Pair NEXT (Max.)
1.0 MHz	13.8 dB
4.0 MHz	11.2 dB
10.0 MHz	10.2 dB
16.0 MHz	9.2 dB

d. Miscellaneous:

1) UL Listed for Fire Safety

2) ISO 9001 Certified Manufacturer

e. Product Specification: ARMM type cable or equal by Superior/Essex, Berktek, or AMP.

2.11 VOICE CIRCUIT TERMINATIONS IN THE TELECOMMUNICATIONS CLOSETS

A. When shown on drawings, the wiring block shall be 110-type and support Category 3, 5E and 6 applications and facilitate cross connection and interconnection using either cross connect wire or the appropriate category patch cords.

1. The wiring blocks shall be fire retardant, molded plastic consisting of horizontal index strips for terminating 25 pairs of conductors each. These index strips shall be marked with five colors on the high teeth, separating the tip and ring of each pair, to establish pair location. A series of fanning strips shall be located on each side of the block for dressing the cable pairs terminated on the adjacent index strips.

2. The wiring blocks shall accommodate 22- through 26-AWG conductors and shall be able to mount directly on wall surfaces either with or without backboards or on a 24” free-standing frame.

3. Clear label holders with the appropriate colored inserts shall be provided with the wiring blocks. The insert labels shall contain vertical lines spaced on the basis of circuit size (3-,

4-, or 5-pair) and shall not interfere with running, tracing or removing jumper wire/patch cords.

4. The wiring blocks shall be available in 50, 100, and 300 pair sizes. The 100 and 300 pair wiring blocks shall be available with or without legs. The legs allow the cables to pass behind the wiring block and fan out to each side. The space created by the feet, on each side of the block, allows it to be used as a vertical jumper trough. The 50 pair size is not available with legs and shall be utilized for low pair count and/or depth restrictive situations.
5. The wiring block shall be able to accommodate over 500 repeated insertions without incurring permanent deformation and it shall pass the reliability test of no more than one contact failure in 10,000 connections.
6. The 110 wiring blocks shall meet the following specifications:
   a. Physical Specifications:
      1) Height: 25/50-Pair – 1.75 in. (4.45 cm); 100-Pair – 3.6 in. (9.12 cm); 300-Pair, 10.8 in. (27.41 cm)
      2) Width: With legs: 10.7 in. (27.23 cm); Without legs: 8.5 in. (21.60 cm)
      3) Depth: With legs: 3.2 in. (8.25 cm); Without legs: 1.4 in. (3.60 cm)
   b. Electrical Specifications: ANSI/TIA/EIA Category 6
7. For each wiring block shown on the drawings, provide and install 110 type 4-pair or 110 type 5-pair connecting blocks for each horizontal index strip on each wiring block. For example, a 300 pair wiring block serving station cables requires 72 4-pair connecting blocks. A 300 pair wiring block serving riser pairs requires 60 5-pair connecting blocks.
8. Product Specification: Uniprise 110A or 110D, Leviton 41AW2-xxx, or AMP 610XC.

B. Voice MPOE/MDF/IDF Rooms, or as otherwise indicated on drawings, locations shall be equipped with termination blocks for termination of voice station and host cable pairs. Voice cable blocks shall consist of a minimum 100 pair. All blocks shall be securely fastened to the room backboards or equipment racks – see drawings. Provide all required D-rings, Flextray or other approved cable guides as required to provide a neat installation. All cables shall terminate in numerical sequence.

2.12 PROTECTORS

A. When shown on drawings, all copper circuits shall be provided with protection between each building with an entrance cable protector panel(s). All building-to-building circuits shall be routed through this protector(s). The protector(s) shall be connected with a #6 AWG copper bonding conductor between the protector ground lug and the MPOE/MDF/IDF ground point.

B. Plug in Surge Protection Modules shall be provided for each pair terminated on the chassis. Protector module shall be solid state type unless otherwise noted.
   1. 240VDC/300VDC solid state protector modules shall provide transient and power fault protection for standard telephone line applications. The modules shall be fast acting, self resetting current limiters to protect against sneak current type faults. These modules shall be UL Listed with integrated test points and Black in color.
   2. 30VDC/75VDC solid state protector modules shall provide transient and power fault protection for digital and data line applications. The modules shall be fast acting, self resetting current limiters to protect against sneak current type faults. These modules shall be UL Listed with integrated test points and Red in color.
   3. In the event that protector modules are not called out in the drawings, SCS Contractor shall include all costs in base bid to provide the 75v solid state modules w/sneak current protection. In all cases, SCS Contractor is responsible to coordinate appropriate module w/Owner prior to ordering material.

C. Product Specification: Circa or Porta Systems.

2.13 GROUNDING SYSTEM AND CONDUCTORS

A. The SCS Contractor shall utilize a Telecommunications Bonding Backbone (TBB) conductor as provided by the Electrical Contractor. The SCS Contractor shall provide telecom ground busbars (TMGB and TGB) and terminate TBB cable(s) on the ground bars located at each MPOE/MDF/IDF Room, or as otherwise indicated on the drawings. Refer to the Telecom Pathways and Grounding Riser Diagram sheet for quantity, sizes and locations.

B. Bond all metallic sheath communications cables entering the building per manufacturer specifications and NEC 770-33, 800-33 and 800-40.

C. All communication system bonding and grounding shall be in accordance with the NEC and NFPA.

D. All cable sheaths and splice cases shall be grounded to a Telecommunications Ground Bus.

E. Shielded horizontal cables shall be bonded to ground in compliance with ANSI/NFPA 70, and local requirements and practices.

F. Within the MPOE/MDF/IDF rooms, the Contractor shall be responsible for ensuring ground continuity between all equipment and the TMGB/TGB busbar. Contractor shall properly bond all appropriate cable sheaths, circuit protectors, enclosures, boxes, patch panels, equipment racks/cabinets, patch panels, cable tray/ladder runway, conduits, and active equipment to the TMGB/TGB busbar(s) utilizing individual #6-AWG solid copper green insulated conductors. Each item to be grounded shall utilize a dedicated ground conductor to the TMGB/TGB. Daisy-chaining the ground conductor between two or more components is prohibited. Contractor shall attach each end of a ground conductor with 2-hole compression lugs, and two (2) bolts (with two “Type-B” internal/external tooth lock washers per bolt) per lug. Burndy mechanical-type screw-down lugs or terminals are prohibited.

G. All ground/bonding connections shall be made metal-to-metal. To ensure a positive electrical connection, remove any paint coating/finish from each connection point prior to attaching the ground lugs.

H. Bonding of ladder tray/runway sections- Attach bonding straps to each ladder tray section by utilizing either two (2) tri-lobular thread-forming screws (not self-tapping or sheet metal screws) or by using two (2) standard bolts with two (2) “Type B” internal-external tooth lock washers per bolt. If thread-forming screws are not used, remove paint at each connection point and use an approved anti-oxidant prior to attaching the bonding strap

I. Contractor shall minimize the ground/bonding conductor lengths and number of bends from equipment to the busbar.

J. Contractor shall label both ends of each grounding conductor as close as practical to the point of termination in a readable position. Ground tag must indicate the location of both ends of the ground conductor (e.g. Rack1-to-TMGB), and tag must include the warning, “If this connector or cable is loose or must be removed, please contact the building Telecommunications Manager prior to removing connection.”

2.14 EQUIPMENT RACKS

A. When shown on drawings, MPOE/MDF/IDF rooms shall be equipped with floor mounted equipment racks provided by the SCS Contractor to provide termination bays for the multiple cable types in addition to shelves, panels, power strips, active equipment, etcetera. The racks shall be made of lightweight aluminum and include mounting hardware for mounting specified

termination equipment to the frame. In addition, the mounting hardware must provide vertical and horizontal wireways for cross connect wire/patch cord routing.

B. Equipment racks, ladder runways and rack mount accessories shall be Black in color unless otherwise noted.

C. Floor mounted racks shall be securely anchored to the floor with a minimum of four (4) anchors to prevent movement.

D. See section 2.13.D of this document for grounding requirements. Daisy-chaining a ground wire between two or more racks is prohibited.

E. Product Specification: Chatsworth or listed equal.

2.15 EQUIPMENT CABINETS

A. When shown on drawings, MPOE/MDF/IDF rooms shall be equipped with equipment cabinets provided by the SCS Contractor to provide termination bays for multiple cable types in addition to shelves, panels, power strips, active equipment, etcetera. Cabinets shall include locking front and rear vented doors, side panels, and mounting hardware to mounting specified termination equipment to the frame. In addition, provide vertical and horizontal wireways for patch cord routing.

B. Equipment cabinets shall be Black in color, unless otherwise noted.

C. Floor-mounted cabinets shall be securely anchored to the floor with a minimum of four (4) anchors to prevent movement.

D. Provide wall-mounted cabinets in IDF rooms. Due to the shallow depth of the IDF rooms, all-mounted cabinets shall not extend more than 12-inches from the wall on which it is attached. Wall-mounted cabinets shall have a minimum of four (4) fasteners securing the maximum rated weight of the cabinet to the wall.

E. See section 2.13.D of this document for grounding requirements. Daisy-chaining a ground wire between two or more cabinets is prohibited.
   1. Product Specification: APC or Chatsworth (floor mounted), Hubbell (wall mounted), or listed equals.

F. TERMINAL BACKBOARDS
   1. Where indicated on drawings, provide new plywood terminal backboards. Use Douglas Fir Plywood, exterior grade, finished one side and prime coat painted on all surfaces with a finish coat of white enamel paint. On each plywood sheet leave one (1) Fire Marshal Stamp unpainted for inspection. Unless otherwise indicated, use 8’-0” high x length as shown on drawings x 3/4" thick plywood. See backboard elevations for more information.

G. UNSPECIFIED EQUIPMENT AND MATERIAL
   1. Any item of equipment or material not specifically addressed on the drawings or in this document and required to provide a complete and functional SCS installation shall be provided in a level of quality consistent with other specified items.

2.16 FIRE RATED PATHWAY

A. The firewall through-penetration shall be a manufactured, UL Classified, firestop device/system designed to allow cables to penetrate fire-rated walls with a built-in fire sealing system that

automatically adjusts to the amount of cables installed.

B. The firestopping device shall be capable of installation in new construction or retrofit in existing structures.

C. The device shall be UL Tested and Classified in accordance with ASTM E814 (UL 1479) and with ratings up to and including 2 hours.

D. Manufacturer: Specified Technologies Inc., EZ-Path® or equal by Wiremold.

2.17 LADDER TRAY/RUNWAY

A. Contractor shall provide and install all ladder tray / ladder runway as indicated on the plan drawings and in this document.

B. Refer to plan drawings for Ladder Tray specifications, and installation requirements.

PART 3 - EXECUTION

3.1 INSTALLATION REQUIREMENTS

A. The wiring of the system shall be executed in accordance with the drawings and the equipment manufacturer's wiring diagrams. Should any variations in these requirements occur, the Contractor shall notify the Owner’s Project Manager before making any changes. It shall be the responsibility of the manufacturer-authorized installer of the approved equipment to install the equipment and guarantee the system to operate as per plans and specifications.

B. All materials shall be new. Used or re-manufactured parts or components are prohibited.

C. All communications cabling used throughout this project shall comply with the requirements as outlined in the NEC Articles 725, 760, 770, and 800 and the appropriate local codes. All copper cabling shall bear UL listed type CMP (Plenum Rated) and/or CM/G (General Purpose) and/or CMR (Riser Rated). All fiber optic cabling shall bear OFNP (Plenum Rated) and/or OFNR (Riser Rated) and/or OFN/G (General Purpose). The Contractor is responsible for installing appropriately rated cable for the environment in which it is installed.

D. Cable Storage: The Contractor shall not roll or store cable reels without an appropriate underlay and the prior written approval of Owner’s Project Manager.

E. All installation shall be done in conformance with ANSI/TIA/EIA 568-C standards and manufacturers installation guidelines. The Contractor shall ensure that the maximum pulling tensions of the specified distribution cables are not exceeded and cable bends maintain the proper radius during the placement of the facilities. Failure to follow the appropriate guidelines will require the Contractor to provide, in a timely fashion, any additional material and labor necessary to properly rectify the situation to the satisfaction and written approval of the Owner’s Project Manager. This shall also apply to all damages sustained to the cables by the Contractor during the implementation.

F. The system must meet all local and other prevailing codes.

G. All cabling installations shall be performed by qualified technicians. The labor employed by the Contractor shall be regularly employed in the installation and repair of communication systems and shall be acceptable to the Owner’s Project Manager to engage in the installation and

service of this system.

H. The cable's minimum bend radius and maximum pulling tension as specified by the cable manufacturer shall not be exceeded.

I. No cable is to be pulled through a conduit body "L-bend" (condulets).

J. Conduit runs shall not exceed 100 feet or contain more than two 90-degree bends without utilizing appropriately sized pull boxes. Pull boxes are not to be used in lieu of a bend. It is the Contractor's responsibility to report any unusable or inadequate conduit runs to the Owner prior to pulling any cable.

K. Reinstate all pull-wires in conduits and ducts after use to facilitate future addition of cables.

L. The number of cables in each conduit shall be controlled to allow for future cable installation and to stay within the manufacturer's maximum allowable cable pulling tension. Conduit fill ratios shall not exceed the current requirements of the NEC.

M. Cable lubricants (i.e. Polywater) shall be used to reduce the cable pull tension stated by the cable manufacturer during cable installation into conduits and innerduct. Contractor shall verify the acceptability of the lubricant to be used with the cable manufacturer prior to using such a lubricant. Lubricants that harden after installation (e.g. Yellow 77) are prohibited. Submit all proposed lubricants for approval PRIOR to use on all low voltage, A/V, coax, fiber optic cable, and voice/data cable installations. Cable lubricants shall be allowed to dry a minimum of 15 days before performing cable certification tests.

N. Any cable damaged or exceeding recommended installation parameters during installation shall be replaced by the Contractor before final acceptance at no cost to the Owner.

O. Each station cable shall have 1 meter of service slack configured in an "S" shape via J-hooks at rack or wall field end and 2 meters of service loop at station outlet end. Service slack shall be located within 15' of the MPOE/MDF/IDF as required to maintain a neat and "workmanship like" installation.

P. The length of each individual run of horizontal cable from the administration subsystem to the information outlet shall not exceed 295-ft (90 m).

Q. Each run of cable between the termination block and the information outlet shall be continuous without any joints or splices.

R. All station cable shall be placed in the interior of walls unless otherwise noted or obstructed.

S. Provide bushings, grommets and strain-relief for cables terminating at wall-mounted outlets and patch panels to ensure durable and robust connections. The bushings and grommets are intended to protect the cables from any sharp edges that present a risk to the cables. Ensure that all sharp edges are covered to protect the cables from damage.

T. All cable bundles exiting floor or wall penetrations and running into furniture or casework shall be wrapped in spiral wrap or split-loom tubing to protect the cabling and provide a neat installation.

U. Power Separation: The Contractor shall not place any distribution cabling alongside power lines, or share the same conduit, channel or sleeve with electrical apparatus. At no point shall the communications cables be tied to power cables or other building services. Station cables and tie cables installed within ceiling spaces shall be routed through these spaces at right

angles to electrical power circuits.

V. Avoid electromagnetic interference (EMI) by maintaining adequate physical separation between telecommunications cabling and possible sources such as, but not limited to, electric motors, electric pencil sharpeners, transformers, fluorescent lights that share distribution space with telecommunications cabling, copiers that share work area space with line cords and terminals, large fax machines and power cords that supports such equipment.

W. All cable or innerduct shall run parallel or at right angles to building wall structures.

X. In suspended ceiling and raised floor areas where duct, cable trays or conduit are not available, cable bundles shall be supported via "J" hooks attached to the building structure and framework at a maximum of five (5) foot intervals. Minimum 1” wide J-hooks shall be appropriately sized to allow a minimum of 50% spare capacity for future cable installation. The Contractor shall include all costs in base bid for any additional supports/seismic bracing required by the Local Authority having Jurisdiction.

Y. The Contractor shall bundle, in bundles of 48 or less, station or other cabling with half inch hook and loop strips tight enough to hold the bundle together in a cylindrical shape, but not so tight as to deform the cable geometry. It shall be possible to completely rotate all cable ties around all cable bundles. Plenum rated hook and loop ties will be used in all plenum areas.

Z. Cables or J-hooks shall not be attached to ceiling grid support wires or laid directly on the ceiling grid. Cables shall be a minimum of 12” above removable ceiling tiles.

AA. Cables or J hooks shall not be attached to or supported by fire sprinkler heads or delivery systems, or any environmental sensor located in the ceiling air space.

BB. Where additional conduit(s)/sleeve(s) are required, but not provided by the electrical Contractor, the SCS cabling Contractor shall be responsible to provide such conduit(s)/sleeve(s). Conduit(s) and sleeve(s) shall be of suitable material, sized, installed, fire-stopped, and grounded as required by the NEC, ANSI/TIA/EIA standards and all other applicable codes and standards. Any conduits and sleeves added by the SCS Contractor shall be approved by the Owner’s Project Manager prior to rough-in.

CC. In the event Contractor is required to remove ceiling tiles, such work shall not break or disturb grid. Removal of the ceiling grid must be coordinated with the Owner’s Project Manager. All insulation shall be replaced in its original location.

DD. Cabling and Termination Identifications: A numbering and marking scheme must be used to identify all cable and cabling terminations. All cables, regardless of length, shall be marked and/or numbered at both ends. Marking codes and methodologies shall correspond to the instructions in this specification.

EE. Ensure that all waste materials are disposed of in a safe manner. Pay particular attention to waste materials produced during the termination of optical fiber cabling. Ensure that all used components and fiber cut-offs are collected in purpose-made containers and disposed of properly. The Contractor shall remove all debris and rubbish created in the course of this project. The Contractor shall thoroughly clean all buildings of any dirt, debris, rubbish, marks, etcetera, caused by the performance of this work.

FF. Equipment Racks and Cabinets: All equipment racks and cabinets shall be bolted to the floor by the Contractor in the location shown on drawings.

GG. Seismic Requirements: Contractor will install all equipment racks, equipment cabinet

enclosures, cable runways, etcetera, according to the local, state and/or federal code. Contractor will notify Owner's Project Manager of such requirements and shall provide such bracing as required.

HH. Miscellaneous Equipment: The Contractor shall provide any necessary screws, anchors, clamps, distribution rings, wire molding, fasteners, miscellaneous grounding and support hardware, etcetera, necessary to facilitate the installation of the System.

II. The cables terminated within the rack or cabinets shall be numbered for identification.

JJ. Cable bundles within the MDF/BDF/IDF shall be dressed into bundles of no more than 48 cables. Maintain each bundle with half inch, hook and loop strips every 18 inches. On completion of installation, neatly run and re-tie all cable bundles in the Closet.

KK. The Contractor shall thoroughly clean all equipment and materials. All exposed parts of the equipment, cabinets, and other equipment shall be left in a clean condition, unblemished and free of all dirt, dust, smudges, spots, fingerprints, etcetera.

LL. The Contractor shall install all patch cords as required per drawings and specifications at the direction of the Owner's project manager in a neat and systematic fashion. Prior to installing all patch cords, the Contractor shall install patch cords in a single rack to demonstrate work practices to the Owner's project manager. Only after any corrections/modification to the installation as directed by the Owner's project manager, may the Contractor continue installing the patch cords in the remaining racks.

MM. Conduits: All backbone cabling will run through dedicated conduits. All new conduits will be supplied with a pull string. Contractor shall supply pull string and pull rope for the installation of all cables in existing conduits. For all conduits left with available capacity, Contractor shall replace pull strings with ¼-inch pull rope during the course of his work. Contractor must seal all conduits with an approved sealing compound.

NN. Use purpose-built pulling grips during cable installation. Do not pull cables by attaching pull wires to cable jackets, elements or reinforcement. The cable pulling tension shall be applied smoothly without jerks. Use strain gauges or equivalent measures to ensure that the maximum manufacturer recommended tensile load rating of the cables is not exceeded during installation.

OO. Provide expansion plugs in all ducts/conduits entering the building. All conduits shall have a water/air/gas tight seal. Seal all unused ducts/conduits with plugs that allow the pull-string to be tied off on the inside.

PP. All cabling shall be splice free unless otherwise specifically noted on drawings.

3.2 PENETRATIONS OF WALLS, FLOORS, AND CEILINGS

A. Unless specifically shown on the drawings, the Contractor shall make no penetration of floors, walls or ceiling without the prior written approval of the Owner's Project Manager.

B. Any penetrations through acoustical walls or other walls for cable pathways shall be sleeved by the Contractor. Sleeves shall consist of metallic conduit deburred and grommetted on both ends, with flanges or other means to prevent the sleeve from slipping or falling out of the partition. Sleeves shall extend a minimum of 6" on both sides of the partition. Outside perimeter of sleeves shall be sealed against sound, air, heat, or as required by partition design. Inside of sleeve shall be sealed similarly after installation of all cabling. Cables shall be independently supported on either side of the sleeve. Sleeves shall not be used as cable supports. Additional requirements in compliance with applicable code shall apply.

C. Replace all moisture and fire barrier material in ducts, conduits and other penetrations disturbed during installation of communications cabling.

D. Any penetrations through fire-rated walls for cable pathways/cables shall be sealed by use of a non-permanent fire blanket or other method in compliance with the current edition of NFPA and the NEC or other prevailing code and must be an approved UL Listed system. The Contractor must not use concrete or other non-removable substance for fire stopping on cable trays, wireways or conduits. Contractors who use this method will be required to replace all cables affected and provide the original specified access to each effected area. This requirement also applies to maintaining fire ratings of all floors penetrated by conduits or devices designated for use by voice and data cabling.

E. Sealing of openings between floors or through rated walls, whether existing or created by the Contractor for placement of cable shall be the responsibility of the Contractor. Sealing material and application shall be an approved UL Listed system and shall be accomplished in such a manner that is acceptable to the local fire and building authorities having jurisdiction over this work. Creation of such openings as are necessary for cable passage between locations as shown on the drawings shall be the responsibility of the Contractor. Any openings created by or for the Contractor and left unused shall also be sealed as part of this work.
   1. Firestopping work shall be performed by a single Contractor to maintain consistency and accountability on the project.
   2. The Contractor shall install penetration firestop seal materials in accordance with design requirements, and manufacturer's instructions.
   3. The Contractor's installer shall be certified, licensed or otherwise qualified by the firestopping manufacturer as having been provided the necessary training to install manufacturer's products per specified requirements.
   4. All installed through penetration firestops shall be identified via label, or stencil. Label shall state that the fill material around the penetrating item is a firestop, and that it shall not be disturbed unless by an authorized Contractor. The label shall include the firestop brand name, and the classified system number for which it was installed.
      a. Sample Label:
      b. MANUFACTURER'S NAME: _____
         1) ATTENTION
         2) Fire Rated Assembly
         3) For Any Changes To This System, Please Refer To UL System Listed Below
      c. PRODUCT: _____
      d. HOUR RATING: _____
      e. UL SYSTEM: _____
      f. INSTALLATION DATE: _____
      g. INSTALLED BY: _____
      h. LICENSE NUMBER: _____
      i. PHONE: _____
      j. FAX:

3.3 LABELING REQUIREMENTS

A. Labeling: The Contractor shall be responsible for printed labels for all cables and cords, distribution frames, and outlet locations, according to the specifications. No labels are to be written by hand.

B. Numbers must be assigned to each outlet location using a logical designation convention. Blueprints with the outlet placement and configuration information have been furnished to the Contractor. Contractor will provide the equipment as necessary to generate Panduit PAN-CODE

(or Equal) laser printer generated self-laminating labels using the numbering convention shown below and as specified herein. Before any permanent labels are installed on blocks, face plates or cables, a sample label of each various type listed below must be submitted to Owner's Project Manager for written approval to ensure compliance with the labeling scheme, legibility, etcetera.

C. Station Faceplate Labeling. The following is illustrative of the number convention to be used:
   1. Example: 21.001
   2. 21 IDF location where cable originates (i.e., IDF room "#2-1").
   3. 001 Station Number

D. Station Outlet Labeling. The following is illustrative of the number convention to be used:
   1. Example: DATA A
   2. Data A 1st Data Jack
   3. Example: Voice 1
   4. Voice 1 1st Voice Jack

E. Station Cable Jacket Labeling. All station cables (Voice and Data) will be labeled within six inches of each termination end (e.g., at both ends, outlet end and BDF/IDF end) using "P-Touch" type, self-laminating cable markers.
   1. Example: 21.001A
   2. 21 IDF location where cable originates (i.e., IDF room "#1").
   3. 001 Station Number
   4. A Cable Identification ("A" for data cable #1, "B" for data cable #2, and "V" for the voice cable.)

F. Riser Cable Labeling. All riser cables will be labeled to reflect the origin and destination abbreviation for the cable and pair counts on large font (16 pitch) self-laminating labels, which shall be located within 18 inches of each end of the cable. Labels shall be placed on the cable to be visible without relocating surrounding cables.
   1. Example #1: IDF22/IDF31/CP100/01
   2. IDF22 Cable Origination
   3. DF31 Cable Destination
   4. CP100 Cable Type and Pair or Strand Count (ex. 100 – pair Copper Cable. Other possibilities include HB for hybrid fiber cable, MM for multimode cable, and SM for singlemode cable.)
   5. 01 Cable identification number (ex. cable 01, there may be more than one copper riser cable with the same origin, destination and pair count).

G. Voice Station Cable Termination Block Labels. All voice station cables will be labeled using appropriate terminal-block label strip with label holders.
   1. Example: 001
   2. 001 Station Number

H. Voice Riser Cable Termination Block Labels. All voice riser blocks shall be labeled using appropriate terminal-block label strip with label holders and shall follow Station Outlet Faceplate Labeling scheme outlined above. Building interconnect voice cable termination block labels shall be per ANSI/TIA/EIA-606-A.

I. Patch Panel Labels, Horizontal. All patch panels will be labeled using self-laminating laser patch panel label markers.
   1. Example: 001A
   2. 001 Station Number
   3. A Cable Identification ("A" for data cable #1, "B" for data cable #2)
   4. Data cable #1 shall be terminated adjacent to data cable #2 moving left to right and top to bottom.

J. Fiber Patch Panel Labels. All fiber patch panels will be labeled using self-laminating laser patch panel label markers. The scheme shall indicate destination of connected cables on the patch panel followed by a slash (/), origination of connected cables on the patch panel followed by a slash (/), and the port number adjacent to the port
   1. Example: MDF/IDF2/01
   2. MDF Destination Patch Panel Location Designation
   3. IDF22 Origination Patch Panel Location Designation
   4. 01 Indicates port number on both origin and destination patch panels.

K. Equipment Rack Labeling: All equipment racks shall be labeled according to their room identifier and a two-digit number. The labels will be engraved plastic plates, with 1”-high white letters on black background. The labels will be attached to the crossmember at the top front of each frame or rack with appropriately-sized sheet metal screws. Self-adhesive strips, glues, etcetera, are unacceptable.
   1. Example: MDF-01
   2. MDF Room Designation
   3. 01 Rack Identifier

L. Tube Cable and Fiber Cable Warning Labeling. The Contractor shall provide and install tags of stamped plastic for tube cable and innerduct. The labeling convention described above within Paragraph H shall apply. Additionally, the Contractor will also install fiber optic warning tags (Osburn Associates Part Number F04002) every eight feet on all exposed fiber optic cable as well as on innerduct containing fiber optic cable installed within the building.

M. MDF/BDF/IDF Floor Plan Mounting Frame: Provide wall mountable floor plan mounting frame with removable Plexiglas front cover in each MDF/BDF/IDF. Frame and cover shall be sized to house 30”x42” floor plan drawing. Coordinate location of frame with Owner’s Project Manager prior to installation.

3.4 TESTING AND WARRANTY

A. The testing is to show that there are no errors, damaged or incorrectly installed components, that the installation is correctly labeled and that all the installed components meet or exceed the criteria detailed in these specifications. Any test that does not show that a component is satisfactorily installed, as per these specifications, shall be repeated. If a test procedure needs to be modified to satisfactorily test some components, the modification shall be submitted for approval of the Owner’s project manger prior to the tests being conducted.

B. All outlets, cables, patch panels and associated components shall be fully assembled and labeled prior to testing. Any testing performed on incomplete systems shall be redone on completion of the work.

C. Provide the Owners' project manager with the opportunity to witness all testing. On reasonable request, the installer shall demonstrate that the test procedure competently identifies the fault conditions being tested for.

D. Complete all the tests identified in these specifications.

E. Ensure that all test equipment is in calibration before delivery to site and throughout the testing period. The installer shall be responsible for ensuring that any necessary tests and rework to maintain equipment's calibration status is carried out. Any tests performed on uncalibrated test equipment shall be repeated at the installer’s cost.

F. The test documentation shall be available for inspection by the Owners' project manager during the installation period and copies shall be submitted to the Owners' project manager within

fourteen days of completion of tests on cables in each area. The installer shall retain a copy to aid preparation of record documents information. See records documents details under submittals section.

G. If on submittal of the record documentation there are any missing test results or incorrectly named files, the test shall be repeated at the installer's expense.

H. The Contractor shall provide competent, factory-trained engineers and/or technicians, authorized by the manufacturer of the cabling system, to technically supervise and participate during all tests for the systems. Personnel shall be competent in and qualified by experience or training for comprehensive TDR and OTDR operation and troubleshooting, for both copper and optical fiber testing.

I. The Contractor shall test and certify the cabling system to minimum standards as set forth in the ANSI/TIA/EIA-568-B specifications for 100BaseTX Ethernet and for enhanced Category 6 cable, token ring, and 1000baseT signals.

J. All cables and termination hardware shall be 100% tested for defects in installation and to verify cable performance under installed conditions. All conductors of each installed cable shall be verified usable by the Contractor before system acceptance. Any defect in the cable system installation including but not limited to cable, connectors, feed-through couplers, patch panels, splices, and connector blocks shall be repaired or replaced to ensure 100% useable conductors in all cables installed.

K. Each cable shall be tested for continuity on all pairs and/or conductors. Twisted-pair cables shall be tested for continuity, pair reversals, shorts, opens, transpositions, and presence of A.C. voltage, plus tests that indicate installed cable performance. These cables shall be tested using a TIA-568-B.2-1 Category 6 Level III/IEC 61935 Level III or better ETL certified cable tester/analyzer.

L. Each installed cable shall be tested for installed length using a Time Domain Reflectometer (TDR) device. The cables shall be tested from patch panel to patch panel, block to block, patch panel to outlet or block to outlet as appropriate. The cable length shall conform to the maximum distances set forth in the ANSI/TIA/EIA -568-B Standard. Cable lengths shall be recorded, referencing the cable identification number and circuit or pair number. For multi-pair cables, the shortest pair length shall be recorded as the length for the cable.

M. When repairs and re-tests are performed, the problem found and corrective action taken shall be noted, and both the failed and passed test data shall be collocated in the binder. Correction of all damaged cables shall include replacing damaged cables with new cables in complete runs, replacing damaged connectors or remaking poor terminations. In-line cable joints, splices or distribution points will not be acceptable except where specified in this document. All damaged cables shall be removed from site.

N. Manufacturer Warranty: Contractor shall provide a ten (10) year Extended Product Warranty for this cabling system per Submittals Section and Records Document.

O. Enhanced Category 6 data cable shall be performance verified using an automated test set. This test set shall be capable of testing for the continuity and length parameters defined above, and provide results for the following tests:
   1. Attenuation (Insertion Loss).
   2. Return Loss (RL).
   3. Near End Crosstalk (NEXT) – measured at both ends of each cable pair.
   4. Attenuation to Crosstalk Ratio (ACR).
   5. Power Sum Near End Crosstalk (PSNEXT).

6. Power Sum Attenuation to Crosstalk Ratio (PSACR).
7. Far End Crosstalk (FEXT).
8. Equal Level Far End Crosstalk (ELFEXT).
9. Power Sum Equal Level Far End Crosstalk (PSELFEXT).

P. Optical fiber cable testing: all fiber testing shall be performed on all fibers in the completed end to end system. There shall be no splices unless otherwise shown on drawings or in this specification. Testing shall consist of a bi-directional end to end otdr trace performed per ANSI/TIA/EIA 455-61 & ANSI/TIA/EIA 526 and a bi-directional end to end power meter test performed per ansi/tia/eia 455-53a. The system loss measurements shall be provided at 850 and 1300 nanometers for multimode fibers and 1310 and 1550 for single mode fibers.

Q. Graphical printouts shall be taken of OTDR tests for each element. These printouts shall be printed at an appropriate scale, such as 0.5 dB per division for the attenuation axis. Provide diskette copies of the OTDR traces to the Owner on completion of the testing. Provide a copy of the emulation software and the appropriate license to Owner.

R. Pre-installation cable testing: The Contractor shall test all fiber cable prior to the installation of the cable. The Contractor shall assume all liability for the replacement of the cable should it be found defective during the warranty period.

S. Loss Budget: Fiber links shall have a maximum loss of: (allowable cable loss per km) x (km of fiber in link) + (.4dB) x (number of connectors) = maximum allowable loss.

T. Any link not meeting the requirements of the standard shall be brought into compliance by the Contractor, at no charge to Owner.

3.5 MISCELLANEOUS PROJECT REQUIREMENTS

A. Single Point of Contact: Contractor will provide an English proficient, single point of contact, i.e., Project Manager, to speak for the Contractor and to provide the following functions:
1. Initiate and coordinate tasks with Owner's Project Manager, and others as specified by Owner's Project Manager.
2. Provide day-to-day direction and on-site supervision of Contractor personnel.
3. Ensure conformance with all Contract provisions.
4. Participate in weekly site project meetings.
5. This individual will remain as Project Manager for the duration of the project. The Contractor may change Project Managers only with the Owner's Project Manager's written approval.

B. Planning meetings and schedule: Within thirty (30) calendar days after the date of award of the Contract, an initial planning meeting will be held with the successful bidder to clarify all requirements (systems, services, distribution methods, etc.), identify responsibilities, and schedule the events that will transpire during the implementation of the project. Within one (1) week of this initial meeting, the Contractor shall provide a written report and project schedule to clearly document the events and responsibilities associated with the project.

C. Site Cleaning: Throughout the progress of the plant construction, the Contractor shall keep the working area free from debris of all types and remove from the premises all rubbish resulting from any work done by Contractor. Daily and at the completion of its work, the Contractor shall, to the extent possible, leave the premises in a clean and finished condition.

D. Safety Requirements: Contractor will utilize appropriate personnel and display warning signs, signals, flags and/or barricades at the work site to ensure adherence to safety regulations and as prudence requires.

E. Specification/Drawing Status: All specifications and drawings related to this project will be "frozen" after shop drawing approval. The Owner reserves the right to negotiate any future changes with the Contractor at any time.

F. Upon approval of shop drawings, Contractor shall immediately place orders for all required materials, components, and supplies. In addition, Contractor shall secure and forward written confirmations (including orders and shipping dates) direct from each manufacturer/vendor to the Owner's Project Manager.

G. Contractor shall expedite shipment of all materials, components and supplies, as necessary to ensure the successful completion of the Project by the date required. All costs for expediting shall be included within Contractor's pricing as provided below.

H. The system/network cost herein shall include administration/maintenance training for at least ten Owner's representatives with a minimum allotment of sixteen hours. All training shall include written and/or video materials that shall remain the property of Owner. If materials are written, they shall be provided in quantities sufficient for each person trained; if materials are video, one copy of each will be required. The administration/maintenance training shall include, but not be limited to, the following:
   1. Review of as-built documentation, including a site demonstration.
   2. All warranty information.

I. Minimum standards for maintenance purposes shall include optional access to service on a 24 hour-a-day, 365 day-a-year basis. In addition, Contractor shall, upon notification, respond as follows:
   1. Emergency Response: Contractor must respond by utilizing remote diagnostics capabilities (as applicable) within thirty minutes of notification. If necessary, Contractor must dispatch at least one certified technician for arrival on-site within two (2) hours of notification.
   2. Non-Emergency Response: Contractor shall respond by utilizing remote diagnostics capabilities and or cause dispatch of at least one certified technician for arrival on-site within one (1) business day of notification.
   3. Definition of "Emergency": For maintenance purposes, "emergency" shall be defined as one or more of the following conditions:
      a. Defects of any riser pairs and/or components involving at least ten percent (10%) of any riser cable's capacity.
      b. Defects of station cable pairs and/or components involving at least ten percent (10%) of any department or group of voice and/or data stations.
      c. Defects significantly impairing any single attendant console.
      d. Defects of any fiber optic cable and/or components involving at least ten percent (10%) of any department's or group's fiber-based systems and/or stations.
      e. Any pre-defined failure as submitted by Owner and agreed to be Contractor.

3.6 DAMAGES

A. The Contractor will be held responsible for all damages to portions of the building caused by it, its employees or subContractors; including but not limited to:
   1. Damage to any portion of the building caused by the movement of tools, materials or equipment.
   2. Damage to any component of the construction of spaces.
   3. Damage to the electrical distribution system.
   4. Damage to the electrical, mechanical and/or life safety or other systems caused by inappropriate operation or connections made by the Contractor or other actions of Contractor.
   5. Damage to the materials, tools and/or equipment of the Owner, its consultants, agents

and tenants.

3.7 INSPECTIONS

A. On-going inspections shall be performed during construction by the Owner's Project Manager. All work shall be performed in a high-quality manner and the overall appearance shall be clean, neat and orderly.

3.8 COMPLETION OF WORK

A. At the completion of the System, the Contractor shall restore to its former condition, all aspects of the project site and daily, shall remove all waste and excess materials, rubbish debris, tools and equipment resulting from or used in the services provided under this Contract. All clean up, restoration, and removal noted above will be by the Contractor and at no cost to Owner. If the Contractor fails in its duties under this paragraph, Owner may upon notice to the Contractor perform the necessary clean up and deduct the costs thereof from any amounts due or to become due to the Contractor. It shall be the Contractor's responsibility to remove trash from the areas it is working in and bring trash and debris to the Contractor provided dumpster.

B. Final Punch Walk: The Contractor and Owner shall complete a final inspection to determinate if all conditions of the scope of work are completed to the Owner's satisfaction. A "punch list" will be formulated within (2) days of the punch walk and be presented to the Contractor for completion prior to final project sign-off by the Owner. If an item is missed during the punch walk or not included on the "punch list" for any reason, it does not release the Contractor from completing the scope of work as defined in the specification or drawings.

C. Contractor shall submit complete Record Documentation as outlined in submittals section prior to project sign-off by Owner.

3.9 SYSTEM AND/OR NETWORK TESTING

A. Upon completion of installation, Contractor shall execute all the required tests as summarized in this specification. When all such tests have been completed to Owner's satisfaction and Manufacturer's specifications, Contractor shall give the Owner written notice thereof.

B. Contractor must assume responsibility of assuring that the system and/or network installed operates properly, including any required coordination with other suppliers.

END OF SECTION

SECTION 28 30 00

INTRUSION ALARM SYSTEM

PART 1 GENERAL

1.1 SCOPE OF WORK

A. The work under this section includes all final design, material, equipment, supplies, labor, testing, and accessories required for a complete and fully functional, UL Listed, Intrusion Alarm system (the system) as indicated on the drawings and as specified herein. This system shall be defined as all cables, equipment, products, etcetera, as indicated on the drawings, and mentioned in these specifications.

B. It is the intent of the Drawings and Specifications, which are presented in a "design-build" format, for the Contractor to design, provide and install a complete, fully operational, and tested system.

C. All miscellaneous system components shall be furnished and installed complete under this section, whether they are listed and described in this section, such that the system shall perform all functions listed herein in compliance with all the specified requirements.

1.2 RELATED WORK

A. All applicable portions of Section 26 00 00 shall apply to this section as though written herein completely.

B. The Contractor shall be responsible for obtaining and utilizing the latest Architectural and Electrical plans.

1.3 GENERAL REQUIREMENTS

A. Contractor: The term “Contractor” shall be defined as the company, or group of companies, that installs the products per Part 2 of this document. The Contractor selected to provide the installation of this system shall be certified by the manufacturer in all aspects of design, installation and testing of the products described herein.
   1. The Contractor shall hold a valid State of California C-7 Low-Voltage license and Department of Consumer Affairs Bureau of Security and Investigative Services (BSIS) “Alarm Company Operator’s” License, shall have completed at least ten (10) projects of equal scope, shall have been in business of furnishing and installing systems of this scope and magnitude for at least the past five (5) consecutive years, and shall be capable of being bonded to assure the Owner’s Project Manager of performance and satisfactory service during the guarantee period.
   2. The contractor shall hold all other licenses required by the legally constituted authorities having jurisdiction over the work.
   3. All work shall be performed under the supervision of a company accredited and trained by the system Manufacturer and such accreditation must be presented.
   4. The Contractor shall be a manufacturer’s Authorized Installer and Warranty Station for

the equipment offered and shall maintain a fully equipped service organization capable of furnishing adequate repair service to the equipment.

5. The Contractor selected for this Project shall adhere to the engineering, installation and testing procedures and utilize the authorized manufacturer components and distribution channels in provisioning this Project.
6. All communication systems supplied shall be listed by Underwriter's Laboratories under UL Standard 1459. A copy of the UL listing card for the proposed system shall be included with the Contractor's submittal.
7. All the equipment in this specification shall be furnished and installed by the Authorized Factory Distributor of the equipment with the most current software package available at the time of installation. At the time of Owner Acceptance of the installation, all equipment shall include all updated software revisions. In addition, provide a backup copy of the most up to date software revision onto a USB flash drive to be handed to the Owner at the completion of the project.
8. The Contractor shall be a factory-trained installer, certified to perform installation, programming and maintenance of the system.

1.4 QUALITY ASSURANCE

A. It is the intent of these specifications to establish an installation standard of quality for labor and materials. For any proposed product "substitution" or when the Contractor intends to include an "or equal" product in the bid pricing, the Contractor shall provide a "Substitution/Or-Equal Request" submittal to the Owner's Project Manager for review no later than fifteen (15) calendar days prior to Bid submittal. This report shall include all the following items:

1. Description of how the proposed product(s) will impact meeting the project completion date, indicate all item(s) with lead times and expected delivery date(s).
2. Itemized cost comparisons between the proposed product(s) and the listed product(s).
3. Detailed technical analysis of the electrical and mechanical specification differences between the proposed product(s) and the listed product(s). Contractor shall submit this in Excel spreadsheet format.
4. ETL "Verified" or UL "Verified" test lab documentation for the proposed product(s) and assemblies proposed.
5. Proposed product identification, manufacturer literature (specifications and cut sheets).
6. Name, address, and contact information of several similar (minimum of 2) projects where the substituted product(s) have been installed by the Contractor in the previous 18 months.
7. Name, address, and contact information of the proposed product(s) manufacturer's local representative.
8. Sample proposed product(s) manufacturer's component and application warranty. Detailed warranty requirements are described in Section 1.10 GENERAL SYSTEM WARRANTY of this document.

B. The Owner's Design Team/Project Manager must approve any proposed product(s) "substitution/or equal" item in writing. The Owner's Design Team/Project Manager reserves the right to require a complete sample of any proposed product(s) and may request a sample tested by an independent testing consultant to prove equality. The decision of the Owner's Design Team/Project Manager regarding equality of proposed product(s) items will be final.

C. If a proposed product(s) is given final acceptance by the Owner's Project Manager, the Contractor shall reimburse the Owner's Design Team/Project Manager for the costs to review the proposed product(s), and for any additional engineering charges, and shall pay all charges of other trades resulting from this product's use, at no cost to the Owner or the

Owner's Design Team/Project Manager.

1.5 GENERAL SUBMITTAL REQUIREMENT

A. Submittals shall be presented and formatted per the guidelines in the Division 1 section of this bid package.

B. All product's cut sheets shall represent the latest version, part number, and revision of the product. Where multiple products or part numbers appear on a page, a bold arrow or circle shall indicate which product or part numbers are to be used as part of the installation. Failure to identify exact part numbers on a page will result in the rejection of the entire submittal package. The submittal shall include all descriptive pages associated with the product, not just the page showing the part number.

1.6 PRE-INSTALLATION SUBMITTAL REQUIREMENTS

A. Within fifteen (15) calendar days after the date of award of the Contract, the Contractor shall submit the following:
   1. Submittal Binder: Submit either electronic PDF files or four (4) printed copies of the complete Submittal Binder to the Owner for review. The binder shall consist of five (5) major sections with each section separated by index tabs. Each page in the binder shall be numbered sequentially and shall be summarized in the index page.
      a. The FIRST section shall be the "title sheet" which shall include the submittal date, project title and address, name and contact information of the Contractor, and name of the Owner. This section shall also include an Index Page identifying and summarizing each section along with their associated page numbers.
      b. The SECOND section shall include the following items:
         1) CONTRACTOR'S LICENSE: A copy of the low voltage Contractor's valid State of California C-7 Low-Voltage license, and valid BSIS Alarm Company Operator License.
         2) PROOF OF EXPERIENCE: Proof (written documentation) that the low voltage Contractor has been regularly engaged in the business of low voltage contracting consisting of, but not limited to, engineering, fabrication, installation, and servicing of communication systems of the type specified herein for at least the past five (5) consecutive years.
         3) PENDING LITIGATION: Provide a statement summarizing any pending litigation involving any officer or principal of/or the company, the nature of the litigation and what effect the litigation may carry as it relates to this work in the worst-case scenario. Non-disclosure of this item, if later discovered, may result, at the owner's discretion, in the Contractor bearing all costs and any cost related to associated delays in the progress of the work.
         4) INSURANCE CERTIFICATES: Copy of low voltage Contractor's current liability insurance and state industrial insurance certificates in conformance with the contract documents.
         5) PROJECT LIST: A List containing at least ten (10) California installations completed within the last seven (7) years by the low voltage Contractor that are comparable in scope and nature to that specified in the contract document. Provide up to date contact information for each project listed including contact name, title, email address and phone number.
         6) SERVICE CAPABILITY: Documentation indicating in detail that the low voltage Contractor has competent engineering, installation, service

personnel and facilities with reasonable stock of service parts within 75 air miles of the job site. Do not submit a sales brochure as documentation.

7) AUTHORIZATION LETTERS: Letters from the low voltage equipment manufacturer stating that the low voltage bidding Contractor is a Factory Authorized Distributor/Installer and is trained and certified for the equipment he proposes to use on this project and is licensed to purchase and install software required to provide the specified functions.

8) PROOF OF TRAINED PERSONNEL: Documentation that the Contractor has full time on-staff personnel, manufacturer trained and certified, for the equipment proposed for this project, and on-staff manufacturer trained and certified by the Test Equipment manufacturer in the proper use of the test equipment required on this project. Provide copies of all manufacturers' training/certification documentation, and Test Equipment manufacturer's training/certification documentation. Provide a statement that personnel meeting these qualifications are in the local facility and will be employed at that facility throughout the project and the warranty period.

c. The THIRD section shall contain a detailed bill of materials including the product description, part number, quantity, unit of measure, and corresponding specification section number or drawing sheet number where that product is referenced. Also listed in the bill of materials shall be each item of test equipment to be used to test the optical fiber, copper, and coax components. Include all patch cords and other specialized components. See example format below:

Description	Part #	Quantity	UoM	Spec	Test Equip.
#18/2 cable	Brand x #12345	10 boxes	1000ft/box	2.03	Fluke DTX-1234

This information may be used by the Owner to evaluate the Contractor's general understanding of the project scope during the bid evaluation. Errors/Omissions from this bill of material do not relieve the Contractor from providing all material, components, labor, etcetera, as outlined in this specification and on the drawings to provide a complete and fully functional structured cabling system.

d. The FOURTH section shall contain original manufacturer cut sheets for all materials that meet the requirements listed in Part 2 of this specification and all materials described on the construction documents. Include manufacturer's cut sheets for all testing equipment to be used for completion of the project. All pages shall be numbered sequentially corresponding to the sequence listed in the Contractor's bill of materials. On each cut-sheet, provide an indicating arrow next to each part number of proposed material.

e. The FIFTH section shall contain a designation schedule for each system component location and complete full size 30" x 42", unless otherwise specified, bond drawings, showing system wiring plans. The professionally drafted drawings shall be generated on AutoDesk AutoCAD 2014 (or later) computer design software. These drawings shall also include:

1) MDF, IDF, and Telecom Room Diagrams - Including:
   a) Cable routing
   b) Position of all components and apparatus
   c) Labeling plan

2) Site Plan (if applicable) – Including:

a) Conduit routing of all site conduits
b) Building designations
c) MDF, IDF, and Telecom room locations
d) Cabling between MPOE and MDF, IDF, and Telecom racks

3) Work Area Floor Plans - Including:
a) Detailed cable routes
b) Device locations and quantities
c) Approved labeling plan for all work areas

4) Riser Distribution Plan.
5) 1/4" scale plans of all telephone / data (MDF, IDF, Telecom) rooms.

f. Failure to comply with any of the requirements listed above may result in the rejection of the entire submittal package.

1.7 PROJECT DIRECTION

A. Single Point of Contact: Contractor will provide an English-proficient, single point of contact (e.g., Project Manager) to speak for the Contractor and to provide the following functions:
1. Initiate and coordinate tasks with Owner's Project Manager, and others as specified by Owner's Project Manager.
2. Provide day-to-day direction and on-site supervision of Contractor personnel.
3. Shall be readily available to the Owner/Owner's Project Manager 24 hours a day, 7 days a week, throughout the duration of the Project.
4. Shall have full-time cellular phone capability, and the ability to send/receive email and text correspondence, accessible by the Owner's Project Manager.
5. Ensure conformance with all Contract provisions.
6. Participate in weekly site project meetings and construction meetings.
7. Provide detailed and written weekly status reports to Owner's Project Manager. The content shall be substantive enough to bring about a full understanding of all situations current and situations future. Weekly reports shall include but are not limited to detailed progress report, RFI status log (Request for Information), Change Order Log (pending and approved), Project Addendum log. Each of the above must show assigned responsibilities and event history. Weekly reports shall include milestone information, resource updates (staff and materials), and any conditions or incidents that may impact the Project Schedule.

B. This individual will remain as Project Manager for the duration of the project. The Contractor may change Project Managers only with the Owner's Project Manager's written approval.

1.8 PLANNING

A. Planning meetings and schedule: Within fifteen (15) calendar days after the date of award of the Contract, an initial planning meeting will be held with the successful bidder to clarify all requirements (systems, services, distribution methods, etcetera), identify responsibilities, and schedule the events that will transpire during the implementation of the project. Within seven (7) calendar days of this initial meeting, the Contractor shall provide a written report and project schedule to clearly document the events and responsibilities associated with the project. Contractor's project schedule shall conform to the overall Project Construction Schedule issued by the Construction Management Company or the Owner. Contractor is required to attend all planning and other construction meetings as requested by the Owner, Architect, or Engineer.

1.9 POST INSTALLATION SUBMITTAL REQUIREMENTS

A. Within fifteen (15) calendar days after the completion of work, the Contractor shall submit the following:
   1. Record Documentation:
      a. Final Test Results – Test results for each cable indicating tests performed, results obtained, and values measured. Test results shall be provided in electronic format with the associated application (if required) for viewing. Testing shall be conducted in accordance with Section 3 of this document.
      b. As-Built Drawings – Contractor shall provide a complete set of professionally drafted, full size 30” x 42”, unless otherwise noted, reproducible bond as-built drawings, generated on AutoDesk AutoCAD 2014 or later. Contactor shall provide/create backgrounds and floor plans. Boarders to be provided or approved by the Architect. MDF, IDF and Telecom Diagrams – Including:
         1) Cable routing for each system. This will include all underground cable routes and building interior cable routes.
         2) Locations of all components and equipment.
         3) Labeling plan. (utilize labeling plan as specified in this document)
         4) Cross-connect records for all voice and data devices in Word or Excel.
         5) Riser Distribution Plan.
         6) System device locations (keypads, detectors, etcetera)
         7) Control panel, terminal cabinet(s), equipment racks, UPS power supply(s), etcetera.
   2. After as-built submittal is approved by Owner, the Contractor shall provide to Owner two (2) USB flash drives, containing all post-installation submittals and close-out documentation.

B. Warranty Documentation:
   1. Contractor shall apply for all Manufacturer’s Warranties on behalf of the Owner. Contractor shall present to Owner all Warranty Documents per Warranty Specifications Sections. Warranty shall commence after final acceptance of System and Project Close Out by the Owner.

1.10 GENERAL SYSTEM WARRANTY

A. All equipment and systems shall be warranted by the Contractor for a period of one (1) year following Final Acceptance by the Owner. The warranty shall include parts, labor, prompt field service, and pick-up and delivery at no cost to the Owner. If repair of a defect cannot be affected during the initial response, every effort shall be made by the Contractor to promptly correct the defect including air shipment of repair parts and replacement of the next larger assembly. On-site response to initial call shall be accomplished within twenty-four (24) hours.

B. All conditions for obtaining the manufacturer’s warranty shall be the sole responsibility of the contractor.

C. The warranty shall commence form the date of final written acceptance by the Owner.

PART 2 PRODUCTS

2.1 ACCEPTABLE MANUFACTURER

A. The system control panel shall be Honeywell Vista 20PUL, or equal.

B. It is the responsibility of the bidder to ensure that the proposed product meets or exceeds every standard set forth in these specifications and the equipment's technical data sheets.

2.2 PRODUCTS

A. Control panel shall be Honeywell Vista 20PUL, or equal, with the following features/specifications:
   1. 64 zone capacity
   2. 8 hardwired zones standard or can be expanded to 15 hardwired zones.
   3. Hardwired zone expanders increase capacity to 48 wired zones.
   4. Unlimited zone wireless receiver #5881ENH will add up to 56 wireless zones.
   5. Supports four graphic touchscreen keypads
   6. Two low-current on-board trigger outputs
   7. Event log viewable at system keypad with time/date stamp
   8. Two independent partitions plus a common partition
   9. 48 system user codes assignable to either partition
   10. 16 output devices
   11. Four configurable zone types
   12. Supports up to four relay boards
   13. Built-in phone line cut monitor with programmable delay and annunciation options
   14. Include LTE cellular communicator (Contractor to confirm desired service provider with Owner prior to ordering), and telephone dialer with RJ31X jack for hardline connection to analog telephone dial tone line.
   15. Provide complete with lockable metal enclosure and power supply.

B. Keypads
   1. Honeywell keypad #6160, or 6160RF, backlit fixed display, talking alphanumeric keypad, four programmable function keys, and soft touch illuminated keys.
   2. Contractor shall verify keypad location(s) with Owner in field prior to rough-in.
   3. Provide quantity and locations per plan drawings.

C. Zone Wireless Receiver
   1. Unlimited zone wireless receiver to provide up to 200 feet of wireless coverage. Only 1 wireless receiver per panel.
   2. Honeywell #5881ENH, or equal.

D. Wireless Repeater
   1. Wireless repeater extends the range of the wireless receiver.
   2. Honeywell #5800RP, or equal.

E. Wireless Transmitter Module
   1. Provides system status to bi-directional wireless devices.
   2. Honeywell 5800TM or 5883H, or equal.

F. Zone Expander
   1. Increases number of hardwired zones up to 8 additional zones.
      a. Honeywell #4219, or equal.

G. Cellular Communicator
   1. Include one cellular alarm communicator module for communication with remote monitoring service. Contractor to determine appropriate communicator required in field with Owner.
   2. Honeywell LTE-XV (Verizon), Honeywell LTE-IV (Verizon), Telguard TG-1 Express (AT&T), etcetera, to be determined by Contractor.

H. Wireless Wall mounted Motion Detector/Sensor
   1. Dual technology (PIR with mirror optics and microwave), include mounting bracket,

color shall be white or gray.
2. Honeywell #5898 dual tec, or equal.

I. Wired Wall mounted Motion Detector/Sensor
1. Dual technology motion detector with flush 1-gang deep box, 3/4"conduit and wall mount bracket.
2. Honeywell #DT7435 or equal.

J. Door Contacts
1. Exterior steel door, recessed, 1-pole 1-throw, #1076C, Honeywell #947-75T, or equal
2. Rollup / Overhead door, #2205A, Honeywell #958-2, or equal.

K. Siren
1. 25 Watt Siren with indoor/outdoor stainless-steel enclosure painted to match surrounding surfaces, provide 1 siren. Coordinate final location with Owner.
2. ATW Security #DS-301SET, Honeywell #WAVE2PD, or equal.

L. Power Supply, Transformers, Batteries
1. Provide all power supplies and transformers as required by the manufacturer. Power supplies and transformers shall be installed inside contractor-provided lockable metal terminal cabinets. Provide battery backup for control panel and motion detectors to allow entire system to fully function for a minimum of 8 hours. Coordinate location of all cabinets with Architect and Engineer of Record prior to rough-in.
2. Honeywell #1361-GT transformer 16.5VAC 40VA, Honeywell #1321 transformer 16.5VAC 25VA, or equal.
3. Ultra Tech IM-1250F1 12V 5.0Ah, or equal. Quantity as required.

M. Wire/Cabling
1. Cabling shall be per manufacturer's requirements and recommendations.
2. Cabling shall be rated for the environment in which it is installed, per the CEC and local codes.

2.3 UNSPECIFIED EQUIPMENT AND MATERIAL

A. Any item of equipment or material not specifically addressed on the drawings or in this document and required to provide a complete and functional telephone system installation shall be provided in a level of quality consistent with other specified items.

2.4 FIRE RATED PATHWAY

A. Contractor shall provide and install a fire rated pathway when penetrating any fire rated assembly.

B. The firewall through-penetration shall be a manufactured, UL Classified, firestop device/ system designed to allow cables to penetrate fire-rated walls with a built-in fire sealing system that automatically adjusts to the amount of cables installed.

C. The firestopping device shall be capable of installation in new construction or retrofit in existing structures.

D. The device shall be UL Tested and Classified in accordance with ASTM E814 (UL 1479) and with ratings up to and including 2 hours.

E. Manufacturer: Specified Technologies Inc., EZ-Path (#EZDP33FW) or equal by Wiremold.

PART 3 EXECUTION

3.1 GENERAL INSTALLATION REQUIREMENTS

A. Motion detectors shall be "on" at all times, unless noted otherwise. Main security keypad turns zone alarms on and off and reports to the central station.

B. Wireless receivers, repeaters and wireless modules shall be provided as required in order to provide signal to all wireless devices on this project. Contractor shall be responsible for the final design, layout, and installation, of all required wireless components whether or not they are indicated on the plan drawings or in this document.

C. Ceiling mounted 360 degree motion detectors shall be located in the center of the room.

D. Wall mounted motion detector shall be located at the corner of a room, facing away from sunlight, heating elements, HVAC outlets and any turbulent air movements.

E. Wiring of the system shall be executed in accordance with the drawings and the equipment manufacturer's wiring diagrams. Should any variations in these requirements occur, the Contractor shall notify the Architect before making any changes. It shall be the responsibility of the factory-authorized distributor of the approved equipment to install the equipment and guarantee the system to operate as per plans and specifications.

F. Plenum rated cable may be run exposed above ceilings, provided the cabling is supported independent of other utilities such as conduits, pipes, and the ceiling support systems. The cables shall not be laid directly on the ceiling panels. The use of cable ties shall be done in accordance with the cable manufacturer's requirements. The cable jacket composition must meet local and all other prevailing fire and safety codes

G. All cables, wires, terminal blocks shall be identified by machine generated labels. Refer to Section 27 10 00 Structured Cabling System for labeling requirements.

H. Refer to Section 27 10 00 Structured Cabling System for specific cabling installation requirements.

I. Furnish all conduit, junction boxes, conductors, devices, terminal cabinets, terminal strips, zone expanders, POPITS, etc., and labor to install a complete and operable system.

J. Materials shall be installed in strict compliance with local building codes. All work shall be performed in accordance with the Honeywell Ademco instructions and in a manner satisfactory to the Owner's representative.

K. The installer shall be fully qualified, and factory trained by Honeywell in the installation, operation, and programming of the system.

L. The Contractor shall thoroughly clean all equipment and materials. All exposed parts of the equipment, cabinets, and other equipment shall be left in a clean condition, unblemished and free of all dirt, dust, smudges, spots, fingerprints, etcetera. The Contractor shall remove all debris and rubbish created in the course of this project. The Contractor shall thoroughly clean all buildings of any dirt, debris, rubbish, marks, etcetera, caused by the performance of this work.

3.2 PENETRATIONS OF WALLS FLOORS AND CEILINGS

A. Unless specifically shown on the drawings, the Contractor shall make no penetration of floors, walls or ceiling without the prior written approval of the Owner's Project Manager.

B. Any penetrations through acoustical walls or other walls for cable pathways / cables shall be sealed by the Contractor in compliance with applicable code requirements and as directed by Owner's Project Manager.

C. Any penetrations through fire-rated walls for cable pathways / cables shall be sealed by the Contractor as required by code and as directed by Owner's Project Manager. The Contractor shall be required to work together with the General Contractor and the Electrical Contractor to coordinate and develop all fire stopping methods prior to any cable installation. The Contractor shall also, prior to the commencement of on-site activities, submit to Owner's Project Manager, details of any special systems to be used.

D. Roof penetrations are prohibited unless specifically noted in the plan drawings. Roof penetrations shall be sealed by the roof warranty's authorized contractor so as not to void the existing roof warranty. The Contractor shall subcontract an authorized roof contractor to make and seal any required roof penetrations. Include all costs in base bid.

3.3 SYSTEM VERIFICATION AND TESTING

A. Prior to system start-up the system installer shall perform a pre-test to verify that the following features are functioning properly.
   1. All initiation devices
   2. All monitor modules
   3. Local audible devices
   4. Network connection and communication link to monitoring company.

B. All start-up programming and system commissioning shall be performed by a manufacturer's trained and certified technician.

C. The system installer shall, in the presence of the Inspector of Record (IOR), perform 100% testing as noted in System Verification above.

3.4 SITE CLEAN UP

A. At the completion of the Systems, the Contractor shall restore to its former condition, all aspects of the project site and on a daily basis, shall remove all waste and excess materials, rubbish debris, tools and equipment resulting from or used in the services provided under this Contract.

B. All clean up, restoration, and removal noted above will be by the Contractor and at no cost to Owner. If the Contractor fails in its duties under this paragraph, Owner may upon notice to the Contractor perform the necessary clean up and deduct the costs thereof from any amounts due or to become due to the Contractor.

C. It shall be the Contractor's responsibility to remove trash from the areas it is working in and bring trash and debris to the Contractor provided dumpster.

3.5 WARRANTY

A. Contractor shall warrant the equipment to be new and free from defects in material and

workmanship, and will, within one (1) year from the date of final written acceptance by the Owner, repair or replace any equipment found to be defective. This warranty shall not apply to any equipment that has been subject to misuse, abuse, negligence or unauthorized modification.

3.6 FINAL ACCEPTANCE

A. The Owner or Owner's representative may visit the site during the installation of the system to ensure that correct installation practices are being followed.

B. The Owner or Owner's representative will conduct a final job review once the Contractor has finished the job. This review will take place within one (1) week after the Contractor notifies the owner.

C. Two (2) copies of all certification data and drawings for all identifications shall be provided to the Owner before the Owner's review.

D. The Owner or Owner's representative will review the installation and certification data prior to the system acceptance.

E. The Owner or Owner's representative may test some of the systems features to ensure that the certification data is correct. If a substantial discrepancy is found, the Owner reserves the right to have an independent consultant perform a certification of the entire system. If such a procedure is undertaken, the cost of the testing will be billed back to the Contractor.

F. In the event that repairs or adjustments are necessary, the Contractor shall make these repairs at his own expense. All repairs shall be completed within 10 days from the time they are discovered.

G. The Contractor shall provide two (2) copies of an "operating and servicing manual" for the system within fourteen (14) calendar days of owner’s final acceptance of the system. The manuals shall be bound in flexible binders. All data shall be printed material or typewritten. Each manual shall include the following: instructions necessary for the proper operation and servicing of the system; complete as-built installation drawings of the system (11”x17”); equipment specification cut sheets, complete performance test data, complete warrantee information and replacement parts list with current prices listed, contact information for repair and warranty work requests.
   1. The Contractor shall provide one (1) full size 30” x 42” bond copy of each scaled Floor Plan. Plan shall include all system information as mentioned previously in this document.
   2. The Contractor shall hand to the Owner a copy of any applicable installation specific software configurations including all log-in passwords in USB flash drive format.
   3. Warranty- Contractor shall provide hard copies of system warranties, as defined and described elsewhere in this document.

3.7 TRAINING

A. The Contractor shall instruct personnel designated by the Owner in the proper use, basic care and maintenance of the system beyond the warranty period. Contractor shall provide up to four (4) hours of in-service training with this system. Contractor shall coordinate training time/date with Owner’s schedule.

END OF SECTION

SECTION 32 14 16

ENGRAVED BRICK UNIT PAVING

PART 1 GENERAL

1.1 SUMMARY

A. This section includes:
   1. Brick pavers set in mortar on a rigid base.

1.2 SUBMITTALS

A. Data: Provide manufacturer's literature for each product specified.

B. Shop Drawings: Show brick paving layout and patterns.

C. Samples:
   1. Brick: Full size of each type and color.
      a. Provide two (2) individual samples to show full color and texture range.
   2. Mortar: Samples of brick with mortar joints of each color.

D. Engraving List: Provide a list of all names on the existing engraved bricks to be removed, prior to demolition.

1.3 DELIVERY, STORAGE, AND HANDLING

A. Deliver products in manufacturer's original sealed packaging.

B. Mark packaging, legibly. Indicate manufacturer's name or brand, type, color, production run number, and manufacture date.

C. Store masonry materials under waterproof covers on planking clear of ground.

D. Protect products from damage during handling and construction operations.

E. Before installation, return or dispose of products within distorted, damaged, or opened packaging.

1.4 FIELD CONDITIONS

A. Environment:
   1. Ensure product reaches a temperature of minimum 40 degrees F for minimum 48 hours before installation.

PART 2 PRODUCTS

2.1 SYSTEM PERFORMANCE

A. Design brick complying with specified performance:

1. Slip Resistance: ASTM C902.

2.2 PRODUCTS - GENERAL

A. Provide each paving system component from one manufacturer and from one production run.

2.3 BRICK

A. Paving Brick: ASTM C902; Class SX, Type I.
   1. Engrave each Brick with donor's names.

2.4 MORTAR

A. ASTM C270, Type S, cement-lime proportion specification mix. Admixtures and Type N lime are not acceptable.

B. Hydrated Lime: ASTM C207 Type S.

C. Sand: ASTM C144.

D. Portland Cement: ASTM C150/C150M.

E. Coloring Pigments: Pure mineral pigments, lime proof and non-fading; added to mortar by the manufacturer. Job colored mortar is not acceptable.

PART 3 EXECUTION

3.1 PREPARATION

A. Examine and verify substrate suitability for product installation.
   1. Verify substrate depth accommodates brick paving installation thickness.

B. Protect existing construction and completed work from damage.
   1. Prevent damage from contact with mortar.

C. Clean substrates. Remove contaminants capable of affecting subsequently installed product's performance.

3.2 INSTALLATION

A. Install products according to manufacturer's instructions and approved submittal drawings.

B. Do not use bricks with chips, cracks, discoloration, or other visible defects.

C. Layout brick paving according to pattern indicated on drawings.

D. Installation with Portland Cement Mortar:
   1. Install brick in full bed joint. Remove excess mortar. Strike joints flush with top surface of brick and tool slightly concave.
   2. Cure mortar by maintaining damp condition for seven days.

E. Installation Tolerances:
   1. Finished surface true to plane within 1/8-inch in 10-feet, non-cumulative.
   2. Joint width deviation maximum 25 percent of dimension indicated.

3.3 CLEANING

A. Remove excess mortar before fully set.

B. Clean exposed brick and mortar surfaces. Remove contaminants and stains.

3.4 PROTECTION

A. Protect brick paving from traffic and construction operations.

B. Cover brick paving with reinforced kraft paper, and plywood or hardboard.

C. Remove protective materials immediately before acceptance.

D. Repair damage; replace and install any broken pavers at no additional cost to the Owner.

END OF SECTION

SECTION 32 80 00

IRRIGATION

PART 1 - GENERAL

1.1 DESCRIPTION

A. Scope of Work: The Contractor shall furnish all labor, materials, tools, equipment, and transportation required to perform and complete the installation of an automatic sprinkler irrigation system, including all piping, sprinkler heads, controls, connections, testing, etc. as shown on the Drawings and as specified herein.

B. Related work in other sections: The following items of associated work are included in other sections of these specifications:
1. Section 32 90 00, Planting.

1.2 QUALITY CONTROL

A. Reviews: Contractor shall specifically request the following reviews prior to progressing with the work. Requests for reviews must be received in writing at least 48 hours in advance.
1. Pressure testing and trench depths
2. Operation of system and coverage adjustment of all heads
3. Final inspection (End of maintenance).

B. Regulatory Requirements: Work and materials shall be in accordance with latest rules, regulations, and other applicable State and local laws. Nothing in Construction Documents is to be construed to permit work not conforming to these codes.

1.3 PROTECTION

A. Contractor shall be responsible for protection of existing irrigation and utilities within and immediately adjacent to the construction area; and repair, to the satisfaction of the Owner, any damages to irrigation and utility lines that occur as a result of operations of this work.

B. Provide water and controls to existing adjacent irrigation system continuously through project as shown on the Drawings.

C. Irrigate existing plant material continuously through the project as needed.

D. Provide and install adequate warnings and barriers to prevent damage or injuries from irrigation operations and equipment.

1.4 SUBMITTALS

A. Contractor shall submit manufacturer’s cut sheets for each element of irrigation system before beginning work.

B. On request, Contractor shall provide Owner with particle size sieve analysis of bedding sand and aggregate base showing compliance with specifications.

PART 2 - PRODUCTS

2.1 MATERIALS

A. Rock-free Soil: Native or import soil free of rocks, roots, sticks, clods, debris, and other foreign matter over 1 inch in longest dimension.

B. Bedding Sand: Course, clean sand meeting the following specifications.

Sieve Size	Percent Passing
#4	75-100
#50	0-70
#100	0-30
#200	0-15

C. Pea Gravel: Clean, washed, natural stone with maximum particle size of ½ inch.

D. Aggregate Base: Caltrans Standard Specifications, Section 26, Class 2 Aggregate Base

2.2 COMPONENTS

A. The components will be as specified: All materials shall be new. Any deviation from the specifications must first be approved by the Owner in writing. All materials shall be clearly marked by manufacturer on all material containers or certificates of contents for inspection.

B. Automatic Controller, Accessories, and Wire:
1. Controller: As indicated on the Drawings.
2. Direct Burial Wire:
   a. Wire: Type UF, 14 gauge single strand copper wire, copper to meet ASTM B-3 requirements, common to be white
   b. Waterproof wire connectors: (3M DBY or DBR or approved equal).
3. PVC conduit
   a. Schedule 40 PVC with solvent weld joints, meets specifications of NEMA TC-2 and UL 651.
   b. Sized as required.

C. Pipe and Fittings:
1. PVC pipe: Schedule 40 PVC with solvent weld joints, Type 1, Grade 1 PVC compound (ASTM D1784, ASTM D1785, ASTM D2672).
2. PVC fittings: High impact, standard weight, Schedule 40, molded PVC (ASTM D2466), as manufactured by Spears, Lasco, or approved equal.
3. Copper pipe and fittings shall be Type K per ASTM B-88.
4. Brass pipe and nipples shall be red brass per ASTM B-687-88.
5. Bronze fittings per ASTM B-62-93 and ASTM B-584.

D. Electric Valves: 150 PSI rating, as indicated on the Drawings.

E. Sprinkler Heads: As indicated on the Drawings.

F. Quick Coupler Valves and Keys: brass, 125 psi, as indicated on the Drawings; provide 1 key with matching hose swivel.

G. Sleeves: SCH 40 PVC pipe with solvent weld joints.

H. Ball Valves: SCH 40 PVC (150 psi).

I. Valve Boxes: HDPE body with matching bolt-down cover; size box as indicated on the Drawings; manufacturer: Carson or approved equal.

J. Drip Irrigation:
1. Plug-in drip emitters shall be pressure compensating, self-piercing, as indicated on the Drawings.
2. Drip tubing shall be 5/8" (.700" OD) Union Carbide #7510 linear, low-density polyethylene resin with minimum 2% carbon black for UV protection.
3. Fittings: plastic, same manufacturer as drip tubing.
4. Pressure regulating filter: 150 psi rating; 200 mesh; 30 or 40 psi outlet pressure; as indicated on the Drawings.
5. Line flushing valve: as indicated on the Drawings.
6. Staples: 6” long, 11g galvanized steel wire formed into “U” shape.
7. Operation indicator: as indicated on the Drawings.

PART 3 - EXECUTION

3.1 EXISTING SITE CONDITIONS

A. Locations of existing utilities and other improvements shown on the Drawings are approximate. Existing conditions shall be verified. Should any utilities be encountered that are not indicated on the plans, the Owner shall be notified immediately. The Contractor shall be held responsible for any damages caused to existing services.

B. Existing irrigation components are the property of the Owner. Unless instructed otherwise, all removed irrigation components shall be given to the Owner.

3.2 GRADING

A. Contractor shall be responsible for installing all irrigation features to their finished grade and at depths indicated. All rough grading and/or finish grading shall be completed and/or accommodated before trenching commences.

3.3 LAYOUT

A. Contractor shall not make any changes from the original Drawings without receiving written permission from the Owner’s Representative. All changes must be recorded on the record "As-built" drawings prepared by the Contractor.

B. Location of pipe and valves on the Drawings is diagrammatic. Locate pipe and components in landscaped areas and valves near edge of turf, walks, or curbs as much as possible.

3.4 TRENCHING

A. All trenches shall be open vertical construction, sufficiently wide to provide ample working space and depths as specified. PVC pipe may be made up on the surface and then placed in the trench. Do not cut existing tree roots measuring over 2 inches in diameter in order to install sprinkler lines. Where small roots must be cut, excavate around by hand and make clean cuts using a saw or ax.

B. Minimum depth of cover:
1. Mainlines: 16”
2. Laterals: 12”
3. Sleeves: 18”

3.5 BACKFILLING

A. All work must be inspected and approved by the Owner prior to covering. Give Owner a minimum of 48 hours written notice prior to filling trenches. All debris and rocks shall be removed from the trenches. Pipe shall have a firm uniform bearing for the entire length of each pipe line to prevent uneven settlement. Wedging or blocking of pipe will not be permitted.

B. Backfill Material:
1. Mainline: bedding sand around pipe (minimum 2” below, 4” above); remainder to be rock free soil.
2. Laterals: Rock-free soil.
3. Conduit and sleeves under paved areas: minimum 3” of bedding sand around pipe remainder to be aggregate base.

C. Backfill shall be brought to uniform and optimum moisture content and mechanically compacted in 6" layers, to the following densities per ASTM D1557.
1. Within landscape areas: 85% - 90%.
2. Under pavement: 95%.

3.6 INSTALLATION

A. Piping System:
1. Handling of PVC pipe and fittings: The Contractor is cautioned to exercise care in handling, loading, unloading, and storing PVC pipe; beds on which materials are stored must be full length of pipe to avoid damage. PVC pipe and fittings shall be especially protected from direct sunlight. Any section of pipe that has been dented or damaged shall not be used in the work.

B. Laying of PVC pipe:
1. Install PVC pipe per manufacturers’ recommendations and ASTM F1668 and as detailed on the Drawings. Handling and assembly of pipe, fittings, and equipment shall be accomplished by skilled tradesmen. Bending of pipe will not be permitted.
2. Trenches shall be padded with bedding sand or rock-free soil as noted above. Pipe shall have a minimum cover of bedding sand or rock-free soil as noted above.
3. PVC pipe should never be laid when there is water in the trench; or when the temperature is 32 degrees F or below.
4. Snake pipe from side to side of trench bottom to allow for expansion and contraction.
5. All foreign matter or dirt shall be removed from inside the pipe before joining and piping shall be kept clean by approved means during and after laying of pipe.
6. Flushing: Remove end heads and operate system at full pressure until all debris, dirt, and sand is removed. Divert water to prevent ponding or damage to finished work.

C. Thread Connections: A non-hardening pipe sealant (Weld-On “All Seal”, Spears Blue 75, or approved equivalent) or Teflon tape shall be used on all threaded joints except at sprinklers.

D. Provide PVC sleeves for water lines and wires under walks and paving. Backfill per Section 3.05. Cap or plug ends to prevent intrusion of backfill and debris.

E. Solvent Weld Joints: Solvent weld joints shall be made with manufacturer's recommended solvent, applied in accordance with manufacturer's recommendations. Pipe and fitting shall be thoroughly cleaned of dirt, dust and moisture before applying

solvent with a non-synthetic brush. Use primer, on pressure pipe only, prior to applying solvent.

F. Sprinklers and Valves:
1. Sprinkler heads, shut off valves, electric valves, and quick coupler valves shall be located as shown on the Drawings except where existing conditions prohibit, or slight changes are approved to achieve as good or better coverage under the same conditions.
2. Valves shall be located in planter areas and adjacent to walks, curbs, or turf areas. Install one valve per valve box.
3. Install sprinkler heads and valves as detailed on the Drawings.

G. Controls
1. Install control wires along-side the mainline wherever possible. Maintain a 3" separation. Install a loop every 200'. Where wire does not follow mainline, install in PVC conduit.
2. Install extra control wires as indicated on the Drawings.
3. Make all wire splices in valve boxes using specified connectors.

H. Drip Tubing:
1. Install drip tubing as shown on the Drawings after planting and finish grading have been completed. Secure with staples installed at 3' on center.
2. Install flushing valves as shown on the Drawings or as requested by Owner.
3. Cover tubing with mulch after complete installation and testing.

3.7 FIELD QUALITY CONTROL

A. Visual Inspection: Pipe shall be homogenous throughout and free from visual cracks, holes, or foreign materials. Inspection shall be made on each length of pipe. All materials are subject to impact test at the discretion of the Owner's Representative.

B. Hydrostatic Tests - Open Trench:
1. Hydrostatic testing shall be conducted in accordance with the pipe manufacturer's recommended testing procedures.
2. Request the presence of the Owner's Representative in writing at least 48 hours in advance of testing.
3. Testing to be accomplished at the expense of the Contractor and in the presence of the Owner's Representative.
4. Apply continuous static water pressure of 100 psi when welded plastic joints have cured at least 24 hours. Pipe shall be free of air at time of testing. With the risers and openings capped:
   a. Main lines and submains to be tested for four hours.
   b. Lateral lines to be tested for one hour.
5. Drip tubing shall be brought to full working pressure and tested for 10 minutes.
6. Repair leaks resulting from tests and repeat tests.
7. Center load piping with a small amount of backfill to prevent arching or slipping under pressure.

C. Test to determine that irrigation system functions according to manufacturer's data and gives full coverage according to intent of the Drawings. If not functioning as specified, correct system to provide satisfactory performance.

3.8 CLEAN UP

A. Immediately clean up any soil, sand, or debris spilled onto streets, parking areas, and sidewalks and properly dispose legally off site. Sweep and/or wash all dirt and mud off

paved areas.

B. During all phases of the construction work, the Contractor shall take precautions to abate dust nuisance by cleanup, sweeping, sprinkling with water, or other means as necessary.

3.9 GUARANTEE

A. All workmanship and materials hereunder shall be guaranteed for one year, from date of final acceptance, against defective workmanship and materials. This includes filling and repairing depressions and replacing plantings due to settlement of irrigation trenches. The Contractor is not responsible for vandalism or theft after date of final acceptance.

3.10 RECORD DRAWINGS

A. Contractor shall regularly update plans of the systems and any changes made to the system throughout the project. Underground installations shall be indicated with at least two measurements from surface features such as walks sand buildings. All changes shall be recorded on this plan before trenches are backfilled. The record drawing shall be made by the Contractor, completed and submitted to the Owner before payment shall be made for work installed. At a minimum, the as-built / record drawings shall indicate the location of:
1. Valves and filters
2. Irrigation pressure lines and stubs
3. Irrigation control wiring and splice locations
4. Irrigation laterals
5. Points of connections
6. Irrigation controller and weather sendor

3.11 CLOSE OUT

A. One complete set of manufacturer's warranties, guarantees, instruction sheets, parts lists and operational manuals shall be delivered to the Owner before acceptance of the contract. Final inspection shall not be made until the sets are approved.

B. Contractor shall program the irrigation controller and accessories and instruct the Owner’s maintenance personnel in its operation.

C. Contractor shall meet with the Owner’s maintenance personnel to review the irrigation system and operation. Contractor shall provide the Owner with any equipment needed to adjust or operate the irrigation system.

D. Provide maintenance per Section 32 90 00 – Planting.

E. As required, the Contractor shall provide the City of Corning with a Landscape Certificate of Completion which includes the following. The Contractor is responsible for all costs and fees to complete the Certificate of Completion.
1. Certification Form
2. Certification of Installation
3. Irrigation Scheduling
4. Schedule of Landscape and Irrigation Maintenance
5. Landscape Irrigation Audit Report
6. Soil Management Report

END OF SECTION

SECTION 32 90 00

PLANTING

PART 1 - GENERAL

1.1 DESCRIPTION

A. Scope of Work: The Contractor shall furnish all labor, materials, tools, equipment, and transportation required to perform and complete the following work as specified herein:
1. Soil Placement, Preparation, and Fertilization
2. Finish Grading
3. Planting
4. Weed Control and Top Dressing
5 Sod
6. Maintenance and Guarantee Periods

B. Related work in other Sections: The following items of associated work are included in other sections of these specifications:
1. Section 32 80 00, Irrigation Systems.

1.2 QUALITY CONTROL

A. Reviews: Contractor shall specifically request the following reviews in writing prior to progressing with the work. Contractor shall give Owner 48 hour notice prior to review.
1. Soil placement, cultivation, and amending.
2. Substantial completion.
3. Acceptance of Completion (Begin Maintenance Period).
4. Final Acceptance (End of Maintenance Period).

B. Testing: As requested by Owner, import fill shall be tested by a licensed laboratory for soil fertility. Test shall include pH, organic matter, soil texture, salinity, infiltration rate, Nitrate, Phosphorus, Potassium, Calcium, Magnesium, Boron, Sodium, Sulfate, Iron, Sodium Absorption Ratio, and Cation Exchange Capacity. Test report shall include recommendations to address soil deficiencies. A copy of the soil fertility report shall be provided to the Owner and Architect. Contractor shall be responsible for cost of testing.

1.3 PROTECTION

A. Contractor shall be responsible for the protection of all existing utilities within the construction area and shall repair any damage to these utility lines that might occur as a result of his operations to the satisfaction of the Owner's Representative.

B. Provide adequate means for protection from damage through excessive erosion, flooding, and heavy rains. Repair or replace damaged areas.

C. Protect trunks and roots of existing plants on site.
1. Do not use heavy equipment within branch spread. Do not rip or rototill in areas with heavy root system.
2. Install orange safety fencing around existing trees to remain at the dripline.

D. Keep all chemical amendments dry until after application.

E. Provide and install adequate warnings and barriers to prevent damage or injuries from planting operations and equipment.

F. Protect mycorrhizal inoculum from moisture, direct sunlight, and temperatures over 90°.

1.4 SUBMITTALS

A. Samples of soil amendment, import planter fill, bark, and gravel.

B. Delivery slips indicating amount of soil amendment and fertilizer delivered to project site.

C. Certificate of compliance for filter fabric.

D. Soil fertility report (if requested by Owner).

1.5 DELIVERY, STORAGE, & HANDLING OF SOD

A. Cut and lift sod by approved methods. Cut sod in pieces approximately 3/4 to one inch thick. Roll or fold sod so it may be lifted and handled without breaking or tearing.

B. Keep storage at job site to a minimum without causing delays.
1. Deliver, unload and install sod within 24 hours of being lifted.
2. Do not deliver small, irregular or broken pieces of sod.

C. Storage:
1. During wet weather: Protect sod from excessive moisture to prevent tearing during lifting and handling.
2. During dry weather: Protect sod from drying, water as necessary to insure its vitality and prevent excess loss of soil in handling. Sod which dries out will be rejected.

PART 2 - PRODUCTS

2.1 MATERIALS

A. Materials to be used shall be in new and perfect condition. Materials shall be as specified; any deviation or substitution from the Drawings must first be approved by the Owner's Representative in writing.

B. All chemicals shall conform to the requirements of the California Food and Agricultural Code and the County Agricultural Commissioner.

C. Fertilizer/Soil Conditioner: 5-3-1 with 15% humic acid and soil penetrant (GroPower Plus or equal).

D. Pre-plant Fertilizer: 6-24-24 with 5% sulfur, .75% zinc, and 1.5% iron (Best or equal)

E. 21-0-0 with 24% Sulfur (Simplot Ammonium Sulfate or equal).

F. Fertilizer Packs for Trees and Shrubs: Biodegradable fertilizer packets, 20-10-5 (Best, GroPower, RTI, or equal).

G. Soil amendment: 90% bark and wood base, 1/8" – 1/4" particle size, free of weeds, soil, toxic chemicals, and other debris.

H. Mycorrhizal Inoculum
1. 120 propagules of arbuscular mycorrhizae fungi per cubic centimeter in a solid

carrier suitable for hydro-seeding or dry seeding equipment.
2. RTI “AM 120” or approved equal.

I. Plant Materials: Shall consist of all trees and shrubs listed on the Drawings. All plants shall conform to the requirements of the American Standard for Nursery Stock (ANSI Z60.1-2018). Plants shall be healthy, shapely, well rooted, not pot bound, free from insect pests or plant diseases, and properly hardened off before planting. Plants not alive and in satisfactory growing condition, as determined by Owner’s Representative, shall be replaced without cost to Owner. All plants shall be true to name. The Owner’s Representative may reject plants before or after planting. All plants of named variety shall be delivered with a nursery name tag attached. Minimum plant sizes:
Large tree - 15 gallon: 7’ high.
Small tree – 15 gallon: 5’ high.
Shrub – 5 gallon: 12” high x 12” wide.
Shrub – 1 gallon: 6” high or 6” wide.

J. Import planter fill: fertile, loose, friable loam, capable of sustaining vigorous plant growth. Fill shall be clean and free from toxic minerals and chemicals, noxious weeds, rocks larger than 1” in any dimension, and other objectionable materials. Acidity/alkalinity range: 5.5 to 7.0. Site soil may be used if it meets specifications.

K. Bark Mulch Top Dressing: Untreated, redwood, fir, or cedar shredded bark. Maximum particle size: 1/2”x3”. “Walk on Bark” or equal.

L. Tree Support and Protection
1. Lodgepole pine stakes, 2” diameter, 8’ long
2. Flexible vinyl ties with UV inhibitors (VIT “Cinch Tie” or approved equal).
3. Tree Trunk Protector: 6” diameter x 8” long corrugated polyethylene drain pipe
4. Trunk Paint: interior latex paint; color-grey.

M. Pre-emergent Weed Control: Trifluralin, Oxadiazon, Dithiopyr, Prodiamine or approved equivalent.

N. Sod
1. Superior sod grown from certified, high quality, seed or cuttings of known origin.
2. Inspect sod to:
   a. Assure satisfactory density without scalped or dead areas.
   b. Assure over-all high quality and freedom from noxious weeds or an excessive amount of other crop and weedy plants at time of harvest.
3. Turf sod shall be a Hybrid Bermuda Grass. Verify variety with Owner.

O. Gravel: 3/4” crushed stone, free of fines, soil, clay, and organic matter.

P. Filter Fabric: Geotextile filter fabric: Caltrans Standard Specifications, Section 96-1.02B (Class A).

Q. Herbicide: translocated herbicide with surfactant (Monsanto “Round-up” or approved equal).

PART 3 - EXECUTION

3.1 PREPARATION

A. Planting areas:
1. Remove all paving, aggregate base, and construction debris from planters.
2. Remove all debris and weeds and properly dispose.

3. Remove and properly dispose of shrubs and groundcovers as shown on the Drawings. Removal includes tops and roots.

B. Existing turf to be removed.
1. Treat all existing turf areas to be removed with a translocated herbicide prior to any demolition or grading work. Application shall occur while existing vegetation is actively growing. Apply per manufacturer's recommendations. Reapply herbicide or remove any weeds or live turf and roots that remain.
2. Dead vegetation may be rototilled into the soil or removed and properly disposed.

C. Inspect soil and weather conditions prior to planting or laying sod. Planting and sod installation over excessively wet, muddy or frozen soil or during freezing temperatures is not acceptable.

D. Verify completion of soil preparation, irrigation system, and finish grading prior to planting and sod laying.

3.2 SOIL PREPARATION

A. Amend soil as indicated on the Drawings. All debris, foreign matter, and stones over 1" in diameter shall be removed from the top 3" of soil prior to the placing of any fertilizers or conditioners.

B. Place import planter fill in planters at depths as shown on Drawings or to meet required finish grades. If more than 8" of fill is being placed, place in 6" lifts and compact to 85%.

C. Apply per 1,000 square feet in all planting areas as shown on Drawings. Incorporate to a depth of 6" within 4 hours of applying mycorrhizal inoculum.

4 cubic yards:	soil amendment
10 pounds:	fertilizer/soil conditioner
10 pounds:	pre-plant fertilizer
5 pounds:	21-0-0
1.5 pounds:	mycorrhizal inoculum

D. Water areas to settle fill. Add additional fill to achieve correct finish grade.

E. Backfill for individual planting holes shall be as indicated on the Drawings.

F. Upon completion of soil preparation, inspection and approval of Owner's Representative shall be obtained prior to commencement of planting.

3.3 FINISH GRADING

A. Grade all finish surfaces smooth and even and as detailed on the Drawings.

B. Eliminate any existing erosion or construction scars.

C. Slope drainage patterns away from buildings as per intention of grading plan.

D. No live weed vegetation shall be present at the completion of finish grading. Treat any existing vegetation with a translocated herbicide or remove by hand or equipment. Existing Bermuda grass in shrub areas shall be treated with an herbicide.

3.4 PLANTING

A. Under the direction of the Owner's Representative, Contractor may make slight adjustments to plant material location if it reflects the original intention of the Drawings. Major relocation of plant material needs Owner's approval before planting. Do not plant trees or shrubs in drainage swales.

B. Trees and shrubs shall be planted as indicated on the Drawings. Install trees so that the crown of the trunk is 1" higher than the immediate soil level. Install shrubs so that the crown of the trunk is 1/2" higher than the immediate soil level. Backfill around roots shall be firmed to prevent settling. Provide a watering basin as needed.

C. Install fertilizer packets in plant holes per manufacturer instructions at the following rate:

1 Gallon: 1 packet
5 Gallon: 3 packets
15 Gallon: 6 packets

D. Tree Support and Protection
1. Staking:
   a. Support shall consist of two tree stakes driven on each side of the rootball and perpendicular to the prevailing winds. Install stakes plumb. Remove existing nursery stake if present.
   b. Install two pairs of tree ties per tree in a figure eight configuration. Secure to stake with galvanized roofing nails.
2. Trunk Protection: Paint trunks of trees branching 3' or more above ground with trunk paint. Apply paint from ground level to first set of main limbs.

E. Remove watering basins after initial watering.

3.5 WEED CONTROL

A. Apply pre-emergent weed control to all planting areas (except turf and seeded areas) after completion of all planting and one complete watering. Follow manufacturer's directions. After applying weed control, do not over water shrub areas, to prevent washing away of weed control. Do not allow any weed control into turf areas. Any existing noxious weeds, such as Bermuda, Nutsedge, or Johnson grass, shall be treated with Roundup in successive treatments until all roots are destroyed. Then remove all grass and roots.

3.6 TOP DRESSING

A. Bark Mulch Top Dressing: Place uniformly to a 3" depth over pre-emergent herbicide.

B. Gravel: Place 3" deep per Drawings over filter fabric. Lap fabric joints 8 inches. Cut out 12" diameter circle from fabric at each plant. Fill gaps with small stones.

3.7 SOD INSTALLATION

A. Site Preparation
1. After finish grading, remove clods and rocks over 1" in diameter, weeds, roots, and debris from the top 2" of soil. Perform grading and shaping refinements to bring surface to true uniform planes free from irregularities and to provide drainage and proper slope to catch basins. Settle all areas with irrigation, rollers, or other approved methods.

B. Sod Laying
1. Lay sod within 24 hours of being lifted.

2. Lay sod in rows with joints staggered. Butt sections closely without overlapping or leaving gaps between sections. Cut out irregular or thin sections with a sharp knife.
3. Top of sod soil shall be 1 inch below top of walks, mow strips, and curbs.
4. After sodding has been completed, roll sodded areas in two directions at approximately right angles with a water ballast roller.
5. Repair and re-roll areas with depressions, lumps, or other irregularities. Heavy rolling to correct irregularities in grade will not be permitted.
6. Water sodded areas immediately after sod laying to obtain moisture penetration through sod into top 4 inches of topsoil.
7. Replace damaged areas at no additional cost to Owner.
8. Provide adequate protection of sodded areas against traffic, trespassing, erosion, and damage of any kind by placing adequate warning signs and barricades. Remove this protection after sodded areas have been accepted by Owner or Representative.

3.8 CLEAN-UP

A. During construction, the Contractor shall keep the site free of rubbish and debris, and shall clean up the site promptly when notified to do so. Care should be taken to prevent spillage on streets from hauling; and any such spillage and debris deposited on streets due to the Contractor's operations, shall be immediately cleaned up.

B. During all phases of the construction work, the Contractor shall take all precautions to abate dust nuisance by cleanup, sweeping, sprinkling with water, or other means as necessary.

3.9 MAINTENANCE

A. General
1. Protect all landscape areas. Damaged material and components shall be repaired or replaced at Contractor’s expense.
2. Keep trash removed from all landscape areas.
3. Maintain all landscaped areas during the course of construction.
4. Improper maintenance or poor condition of the plant material at the termination of the scheduled maintenance period may cause postponement of the final completion date of the project. Maintenance shall be continued until all work for the total project is acceptable.

B. Trees, plants, and groundcovers
1. Maintain all plant material in a healthy, growing condition.
2. Maintain tree stakes and ties. Tighten and re-stake as needed.
3. Provide control of pests, animals, and diseases as needed.
4. Provide weed control as needed in landscape and mulch areas. Use of pre-emergent and other herbicides is permitted if compatible with type of plant material. Apply per manufacturer recommendations. Contractor shall obtain Owner’s written permission before applying herbicides.
5. Prune only to remove dead or diseased branches and promote proper growth.
6. Irrigate as needed.

C. Sod
1. Maintain sod in a healthy, growing condition.
2. Maintain turf sod at a height between 3/4” and 1-1/2”.
3. Provide control of pests, animals, and diseases as needed.
4. Irrigate as needed.

D. Irrigation System
1. Maintain irrigation system in a properly functioning condition.
2. Coordinate with Owner to adjust watering schedule to provide the correct amount of

water based on site and weather conditions.

3. Repair all damage to irrigation system within 48 hours.
4. Drip System
   a. Periodically inspect and clean filters per manufacturer's recommendations.
   b. Periodically inspect the operation indicators while in operation to determine if service or repairs are required.
   c. Periodically inspect each drip zone while in operation. Inspections should occur at the beginning of the irrigation season, after planting, and after any digging has occurred in the zone area. Look for excessively dry or wet areas.

3.10 GUARANTEE

A. Owner's Representative may reject any plant material which is damaged, diseased, in a state of decline, or dead. The Contractor shall immediately replace any rejected material at his expense. All replacement materials or installations shall conform to the Construction Documents. Replaced plant materials shall be guaranteed for one-half of the initial guarantee period.

3.11 MAINTENANCE AND GUARANTEE PERIODS

A. Maintenance period shall be for ninety (90) calendar days. Maintenance period begins when all elements of construction, planting, and irrigation for the entire project are completed in accordance with the Construction Documents and accepted by the Owner or Representative.

B. The Contractor shall guarantee all plant materials and other materials for 90 days minimum from date landscape installation is accepted as complete.

C. If the 90 day maintenance and guarantee period begins between December 15 and March 15, the 90 day period shall begin after March 15. If the 90 day maintenance and guarantee period ends between December 15 and March 15, the 90 day period shall be extended after March 15 the number of days falling within the period. In both cases, the Contractor is responsible for maintenance and guarantee between December 15 and March 15.

3.12 FINAL ACCEPTANCE

A. Upon completion of all project work, including the maintenance period, the Contractor shall submit a written request to the Owner to conduct an observation and determine the acceptability of the project.

B. When observed work does not comply with the Construction Documents, replace rejected work and continue maintenance period until Owner re-inspects and accepts the project.

C. Prior to the date of final observation, the Contractor shall provide the Owner with all record drawings, written instructions, components, and close out submittals as described in the Construction Documents.

D. Sodded areas will be accepted at end of the maintenance period if:
   1. Sodded areas are properly established.
   2. Sod is free of bare and dead spots and without weeds
   3. No surface soil is visible when grass has been cut to height of 1-1/2 inches.

END SECTION

TEHAMA COUNTY CORNING VETERAN'S HALL

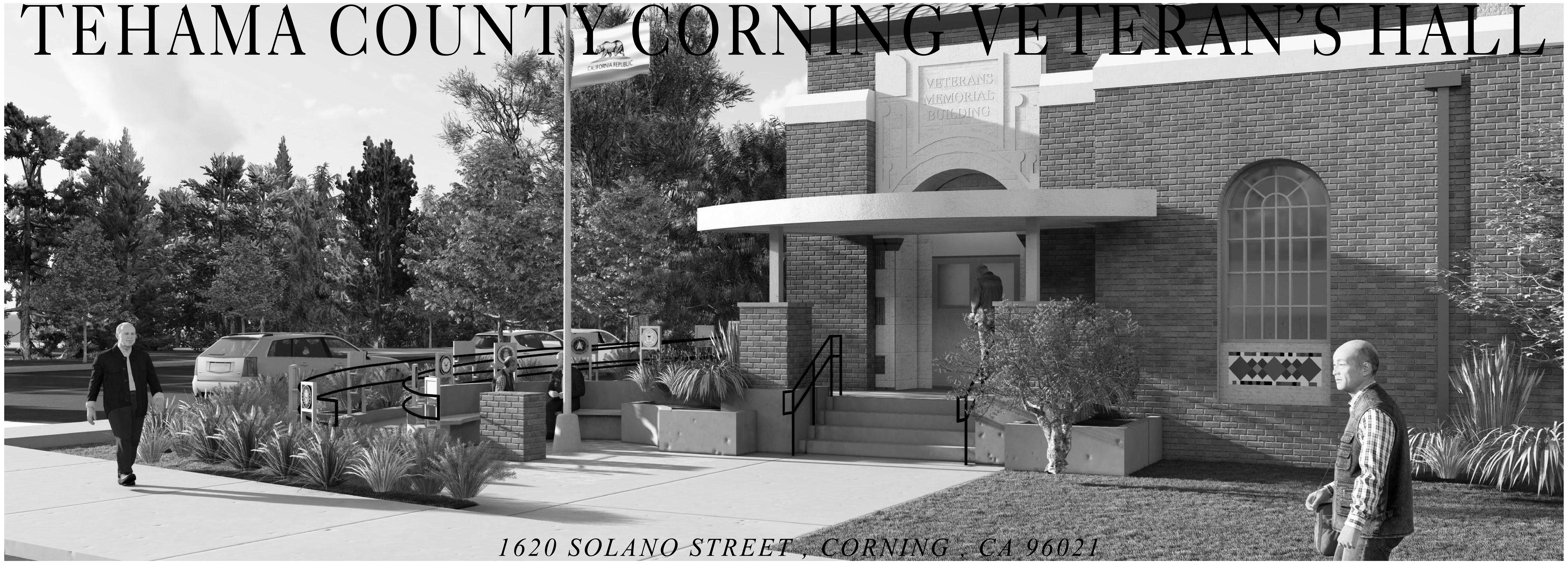

1620 SOLANO STREET , CORNING , CA 96021

Copyright © 2025

All ideas, designs, arrangements and plans indicated or represented by this drawing are owned by, and the property of, NICHOLS, MELBURG and ROSSETTO and were created, evolved and developed for use on, and in conjunction with, the specified project. None of such ideas, designs, arrangements or plans shall be used by, or disclosed to any person, firm or corporation for any purpose whatsoever without the written permission of NICHOLS, MELBURG and ROSSETTO.

NICHOLS MELBURG & ROSSETTO
ARCHITECTS + ENGINEERS
300 KNOLLCREST DRIVE
REDDING, CA. 96002
(530) 222-3300 (530) 222-3538 FAX
http://www.nmrdesign.com

CONSULTANTS

Architect:
NICHOLS, MELBURG, & ROSSETTO
300 Knollcrest Drive
Redding, CA 96002
(530) 222-3300
(530) 222-3538 Fax

Civil:
ROBERTSON ERICKSON
888 Manzanita Court Suite 101
Chico, CA 95926
(530) 894-3500

Landscape:
MICHAEL LANDER ASLA
20270 Lupine Drive
Redding, CA 96002
(530) 223-2488

Structural:
NICHOLS, MELBURG, & ROSSETTO
300 Knollcrest Drive
Redding, CA 96002
(530) 222-3300
(530) 222-3538 Fax

Mechanical & Plumbing:
FRONTIER CONSULTING ENGINEERING
2727 Bechelli Lane
Redding, CA 96002
(530) 232-6160

Electrical & Low Voltage:
TK1SC
11870 Pierce Street, Suite 160
Riverside, CA 92505
(951) 299-4160

LICENSE STAMPS

LICENSED ARCHITECT
KYLE MATTI
C 27504
REN. 10/31/25
STATE OF CALIFORNIA

CODES / STANDARD

APPLICABLE CODES:

ALL WORK PERFORMED & PRODUCTS FURNISHED SHALL COMPLY AS APPLICABLE WITH THE LATEST REGULATIONS OF:

- CITY OF RED BLUFF MUNICIPAL CODE
- TITLE 19 C.C.R., PUBLIC SAFETY, STATE FIRE MARSHAL REGULATIONS
- 2022 BUILDING STANDARDS ADMINISTRATIVE CODE, PART 1, TITLE 24 C.C.R.
- 2022 CALIFORNIA BUILDING CODE (CBC), PART 2, TITLE 24 C.C.R.
- 2022 CALIFORNIA ELECTRICAL CODE (CEC), PART 3, TITLE 24 C.C.R.
- 2022 CALIFORNIA MECHANICAL CODE (CMC), PART 4, TITLE 24 C.C.R.
- 2022 CALIFORNIA PLUMBING CODE (CPC), PART 5, TITLE 24 C.C.R.
- 2022 CALIFORNIA ENERGY CODE, PART 6, TITLE 24 C.C.R.
- 2022 CALIFORNIA FIRE CODE, PART 9, TITLE 24 C.C.R.
- 2022 CALIFORNIA EXISTING BUILDING CODE, PART 10, TITLE 24 C.C.R.
- 2022 CALIFORNIA GREEN BUILDING STANDARDS CODE, PART 11, TITLE 24 C.C.R.
- 2022 CALIFORNIA REFERENCED STANDARDS CODE, PART 12, TITLE 24 C.C.R. (PARTIAL LIST - SEE CBC CHAPTER 35 & CFC CHAPTER 45)

PROJECT DATA

1. BUILDING DATA:
   - EXISTING FIRST FLOOR: 9,185 SQ. FT.
   - EXISTING SECOND FLOOR: 1,103 SQ. FT.
   - TOTAL CONDITIONED AREA: 10,288 SQ. FT.
2. CONSTRUCTION CLASSIFICATION: TYPE V - B
3. OCCUPANCY GROUP: A-3
4. ASSESSOR'S PARCEL NUMBER: 071-121-006
5. SPRINKLER SYSTEM: YES ____ NO _X_

CONTRACTOR NOTICE

1. THE CONSTRUCTION DOCUMENTS FOR THIS PROJECT ("CONSTRUCTION DOCUMENTS") INCLUDE THE DRAWINGS AND THE SPECIFICATIONS. BOTH ARE INTEGRAL COMPONENTS OF THE CONTRACT FOR CONSTRUCTION BETWEEN BUILDING OWNER, ("OWNER") AND THE GENERAL CONTRACTOR ("CONTRACTOR").
2. IT IS THE INTENT OF THE CONSTRUCTION DOCUMENTS TO DESCRIBE A COMPLETE, FUNCTIONAL, CODE-COMPLIANT PROJECT TO BE CONSTRUCTED. THE CONSTRUCTION DOCUMENTS ARE COMPLEMENTARY, AND WHAT IS REQUIRED BY ANY PORTION SHALL BE AS BINDING AS IF REQUIRED BY ALL. WORK NOT SPECIFICALLY COVERED IN THE CONSTRUCTION DOCUMENTS SHALL NONETHELESS BE REQUIRED, IF IT IS CONSISTENT THEREWITH OR IS REASONABLY INFERABLE THEREFROM AS BEING NECESSARY OR APPROPRIATE TO PRODUCE THE INTENDED RESULTS.
3. ANYTHING MENTIONED IN THE SPECIFICATIONS BUT NOT SHOWN ON THE DRAWINGS, OR SHOWN ON THE DRAWINGS BUT NOT MENTIONED IN THE SPECIFICATIONS, SHALL BE OF LIKE EFFECT AS IF SHOWN OR MENTIONED IN BOTH.
4. THE CONSTRUCTION DOCUMENTS ARE INTENDED TO BE USED TOGETHER. IT IS THE RESPONSIBILITY OF THE CONTRACTOR TO PROVIDE ACCESS TO THE COMPLETE BID SET CONSTRUCTION DOCUMENTS PACKAGE, AND ANY ADDENDA THERETO, TO ANY AND ALL NECESSARY SUB-CONTRACTORS, MATERIAL OR EQUIPMENT SUPPLIERS, ETC., AS NECESSARY TO PROVIDE A COMPLETE, RESPONSIVE BID. THE USE OF ANY PORTION OF THE CONSTRUCTION DOCUMENTS IN THE ABSENCE OF THE COMPLETE PACKAGE SHALL BE AT THE SOLE RISK OF THE USER.
5. THE CONSTRUCTION DOCUMENTS APPLY IN THEIR ENTIRETY TO ALL CONTRACTOR FORCES. THE ARCHITECT AND ITS SUB-CONSULTANTS HAVE SHOWN VARIOUS PORTIONS OF THE WORK ON SEPARATE SHEETS AND/OR CLASSIFICATIONS OF DRAWINGS, AND HAVE SPECIFIED VARIOUS PORTIONS OF THE WORK IN SEPARATE SECTIONS OF THE SPECIFICATIONS. SUCH SEPARATIONS SHALL NOT BE CONSIDERED AS THE LIMITS OF THE WORK REQUIRED OF ANY SEPARATE TRADE. THE TERMS AND CONDITIONS OF SUCH LIMITS ARE WHOLLY BETWEEN THE CONTRACTOR AND ITS SUB-CONTRACTORS. THE COMPLETED PROJECT SHALL INCLUDE ALL WORK DEPICTED IN THE CONSTRUCTION DOCUMENTS. THE OWNER WILL CONSIDER THE CONTRACTOR AS THE SOLE PROVIDER OF ALL WORK NECESSARY TO COMPLETE THE PROJECT, TO THE EXTENT SUCH WORK IS REQUIRED BY OR REASONABLY INFERABLE FROM THE CONSTRUCTION DOCUMENTS.
6. SHOULD THE CONTRACTOR DISCOVER A CONFLICT, ERROR, OR DISCREPANCY IN THE CONSTRUCTION DOCUMENTS, HE/SHE SHALL IMMEDIATELY NOTIFY THE ARCHITECT IN WRITING, BEFORE PROCEEDING WITH WORK AFFECTED THEREBY. PROCEEDING WITH ANY SUCH WORK WITHOUT FIRST GIVING SUCH TIMELY NOTICE SHALL CONSTITUTE A WAIVER BY THE CONTRACTOR OF ANY RELATED CLAIM(S) FOR ADDITIONAL TIME OR MONEY.

GENERAL NOTES

1. ALL WORK AND MATERIALS SHALL BE IN FULL ACCORDANCE WITH ALL APPLICABLE ADOPTED ORDINANCES AND BUILDING AND FIRE PREVENTION CODES. REFER TO THESE DRAWINGS FOR A LIST OF KNOWN APPLICABLE CODES. ANY DISCREPANCIES BETWEEN THESE CODES AND THE CONSTRUCTION DOCUMENTS SHOULD IMMEDIATELY BE BROUGHT TO THE ATTENTION OF THE ARCHITECT. THE CONSTRUCTION DOCUMENTS SHALL NOT BE CONSTRUED AS TO PERMIT WORK THAT DOES COMPLY WITH THESE CODES.
2. DIMENSIONS SHALL TAKE PRECEDENCE OVER ITEMS AS GRAPHICALLY DEPICTED IN THESE DRAWINGS. DIMENSIONS ARE TO FACE OF STUDS OR SLAB, AND TO CENTERLINES OF STEEL MEMBERS, UNLESS NOTED OTHERWISE ON DRAWINGS. DO NOT SCALE DRAWINGS. DIMENSIONS NOTED AS "CLEAR" (CLR) ARE TAKEN TO THE FACE OF FINISH MATERIALS. VERIFY DIMENSIONS OF PREFABRICATED AND MANUFACTURED ITEMS AND COORDINATE ROUGH OPENINGS ACCORDINGLY.
3. WHERE CONSTRUCTION DETAILS ARE NOT SHOWN OR NOTED FOR ANY PART OF THE WORK, THE DETAILS SHALL BE THE SAME AS FOR OTHER SIMILAR WORK SHOWN ON DRAWINGS. IF SIMILAR WORK IS NOT DETAILED IN DRAWINGS, WORK SHALL FOLLOW INDUSTRY STANDARDS AND MANUFACTURER'S RECOMMENDATIONS AS ACCEPTABLE TO THE ARCHITECT.
4. ALL CONSTRUCTION SHALL BE IN STRICT CONFORMANCE WITH MANUFACTURER'S LATEST PUBLISHED SPECIFICATIONS AND INSTRUCTIONS. ALL DISCREPANCIES BETWEEN THESE SPECIFICATIONS AND INSTRUCTIONS AND THE CONTRACT DOCUMENTS PREPARED BY THE ARCHITECT AND ITS CONSULTANTS, SHALL BE BROUGHT TO THE ATTENTION OF THE ARCHITECT IN WRITING PRIOR TO COMMENCING WORK.
5. VERIFY ALL DIMENSIONS, EXISTING UTILITY LOCATIONS, AND EXISTING CONDITIONS AFFECTED BY THE CONTRACT PRIOR TO STARTING CONSTRUCTION. ANY DISCREPANCIES OR INCONSISTENCIES FOUND SHALL BE BROUGHT TO THE ARCHITECT'S ATTENTION BEFORE WORK PROCEEDS.
6. ALL SUBCONTRACTORS ARE REQUIRED TO BE LICENSED WITH THE CITY BUILDING DEPARTMENT.
7. THE CONTRACTOR SHALL PROVIDE ALL MEASURES NECESSARY TO PROTECT THE STRUCTURE, WORKMEN, AND ALL OTHER PERSONS DURING CONSTRUCTION.

DRAWING INDEX

DWG. #	DESCRIPTION
GENERAL	
G001	TITLE SHEET
G010	CALGREEN CHECKLIST
G011	CALGREEN CHECKLIST
G012	CALGREEN CHECKLIST
G110	LIFESAFETY & SIGNAGE FLOOR PLAN
G212	TYPICAL ACCESSIBILITY REQUIREMENTS
CIVIL	
C1.0	TITLE SHEET
C2.0	EXISTING TOPOGRAPHY/DEMOLITION PLAN
C3.0	GRADING PLAN
C4.0	UTILITY PLAN
C5.0	PAVING PLAN
C6.0	DETAIL SHEET
C6.1	DETAIL SHEET
C7.0	EROSION AND SEDIMENT CONTROL PLAN
LANDSCAPE	
L1	PLANTING PLAN
L2	IRRIGATION PLAN
L3	IRRIGATION DETAILS
ARCHITECTURAL	
A001	SITE DEMOLITION PLAN
A010	SITE PLAN
A020	ENLARGED PLAN
A060	SITE DETAILS
A061	SITE DETAILS
A062	SOLAR CARPORT FRAMING PLAN AND ELEVATIONS
A101	FIRST FLOOR DEMOLITION PLAN
A102	SECOND FLOOR DEMOLITION PLAN
A120	ROOF DEMOLITION PLAN
A200	BASEMENT FLOOR PLAN
A201	FIRST FLOOR PLAN
A202	SECOND FLOOR PLAN AND LOWER ROOF PLAN
A220	ROOF PLAN
A231	FIRST FLOOR REFLECTED CEILING PLAN - DEMOLITION & NEW
A232	SECOND FLOOR REFLECTED CEILING PLAN - DEMOLITION & NEW
A240	ENLARGED RESTROOM FLOOR PLAN & INTERIOR ELEVATIONS
A241	ENLARGED KITCHEN FLOOR PLAN & INTERIOR ELEVATIONS
A300	EXTERIOR ELEVATIONS
A400	BUILDING SECTIONS
A401	BUILDING SECTIONS
A402	BUILDING SECTIONS
A410	ENLARGED SECTIONS
A411	ENLARGED SECTIONS

DWG. #	DESCRIPTION
ARCHITECTURAL, CONT.	
A500	INTERIOR ELEVATIONS
A501	INTERIOR ELEVATIONS
A700	FINISH SCHEDULE
A710	DOOR & WINDOW SCHEDULES
A720	CONSTRUCTION ASSEMBLIES
A740	EXTERIOR WINDOW DETAILS
A741	EXTERIOR WINDOW DETAILS
A801	EXTERIOR DETAILS
A901	INTERIOR DETAILS
A902	CEILING DETAILS
A910	INTERIOR DETAILS
A960	SIGNAGE DETAILS
INTERIOR DESIGN	
ID201	FIRST FLOOR FINISH FLOOR PLAN
ID202	SECOND FLOOR FINISH FLOOR PLAN
STRUCTURAL	
S110	STRUCTURAL GENERAL NOTES
S120	TESTING & SPECIAL INSPECTIONS NOTES
S210	PARTIAL FOUNDATION PLAN
S211	PARTIAL FOUNDATION PLAN
S212	PARTIAL FOUNDATION & FLOOR FRAMING PLANS
S220	PARTIAL LOW ROOF FRAMING PLAN
S221	PARTIAL LOW ROOF FRAMING PLAN
S230	PARTIAL HIGH ROOF FRAMING PLAN
S410	TYPICAL FOUNDATION DETAILS & SECTIONS
S411	FOUNDATION & FRAMING DETAILS
S610	TYPICAL WOOD FRAMING DETAILS & SECTIONS
S620	FRAMING & EQUIPMENT ANCHORAGE DETAILS
S621	FRAMING & EQUIPMENT ANCHORAGE DETAILS
S622	FRAMING DETAILS
MECHANICAL	
M100	MECHANICAL LEGEND AND SCHEDULES
M200	MECHANICAL DEMOLITION FIRST FLOOR PLAN
M201	MECHANICAL DEMOLITION ROOF PLAN
M210	MECHANICAL ZONING PLAN
M211	MECHANICAL FIRST FLOOR PLAN
M212	MECHANICAL SECOND FLOOR PLAN
M240	MECHANICAL ROOF PLAN
M300	MECHANICAL DETAILS
M301	MECHANICAL DETAILS
M400	MECHANICAL CONTROLS
M500	TITLE 24 COMPLIANCE FORMS

DWG. #	DESCRIPTION
PLUMBING	
P100	PLUMBING LEGEND AND SCHEDULES
P200	PLUMBING DEMOLITION PLAN
P210	PLUMBING FIRST FLOOR PLAN
P211	PLUMBING SECOND FLOOR PLAN
P220	ENLARGED PLUMBING PLANS
P240	PLUMBING ROOF PLAN
P300	PLUMBING DETAILS
P301	PLUMBING DETAILS
ELECTRICAL	
E0.1	SYMBOLS LIST
E1.0	SITE ELECTRICAL PLAN
E2.1	LIGHTING PLAN - BASEMENT
E2.2	LIGHTING PLAN - LEVEL 1
E2.3	LIGHTING PLAN - LEVEL 2
E2.4	POWER & COMMUNICATIONS PLAN - BASEMENT
E2.5	POWER & COMMUNICATIONS PLAN - LEVEL 1
E2.6	POWER & COMMUNICATIONS PLAN - LEVEL 2
E2.7	MECHANICAL POWER PLAN - LEVEL 1
E2.8	MECHANICAL POWER PLAN - LEVEL 2
E2.9	ROOF PLAN
E2.10	ELECTRICAL ENLARGED PLAN
E3.0	SINGLE LINE DIAGRAM
E3.1	PANEL SCHEDULES
E3.2	POWER SYSTEMS STUDY
E4.1	LIGHTING FIXTURE SCHEDULE
E4.2	DISTRIBUTED LIGHTING CONTROL SCHEDULE & PRODUCT SPECS
E4.3	DISTRIBUTED LIGHTING CONTROL SPECIFICATIONS
E4.4	SEQUENCE OF OPERATIONS
E4.5	TITLE 24
E4.6	TITLE 24
E4.7	TITLE 24
E5.0	MISCELLANEOUS DETAILS
E5.1	MISCELLANEOUS DETAILS
E5.2	TECHNOLOGY DIAGRAMS
E5.3	TECHNOLOGY DETAILS
ED2.1	ELECTRICAL DEMOLITION PLAN - BASEMENT
ED2.2	ELECTRICAL DEMOLITION PLAN - LEVEL 1
ED2.3	ELECTRICAL DEMOLITION PLAN - LEVEL 2
FA0.0	CENTRAL MONITORING SYSTEM SPEC & SYMBOL LIST
FA0.1	FIRE ALARM DETAILS
FA2.1	FIRE ALARM FLOOR PLAN - BASEMENT
FA2.2	FIRE ALARM FLOOR PLAN - LEVEL 1
FA2.3	FIRE ALARM FLOOR PLAN - LEVEL 2
PHOTOVOLTAIC	
PV-2.1	PV LAYOUT - PARKING AREA
PV-3.2	PV SINGLE LINE DIAGRAM
PV-4.2	EQUIPMENT DATA SHEETS

VICINITY MAP

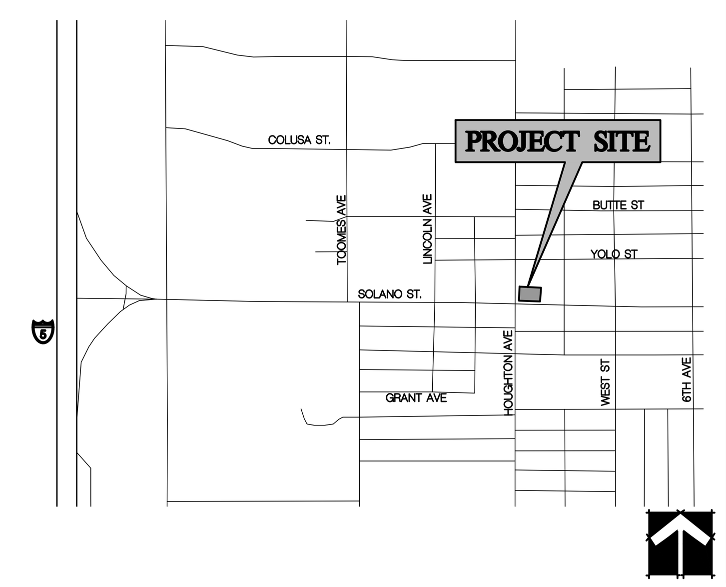

PROJECT NARRATIVE

THE PROJECT CONSISTS OF A COMPLETE RENOVATION OF THE INTERIOR OF THE CORNING VETERANS HALL, LOCATED AT 1620 SOLANO STREET IN CORNING, CALIFORNIA. IMPROVEMENTS INCLUDE DEMOLITION OF ALL INTERIOR FINISHES, NEW MECHANICAL, PLUMBING AND ELECTRICAL SYSTEMS, NEW INSULATION, NEW INTERIOR FINISHES THROUGHOUT, NEW KITCHEN EQUIPMENT, NEW ACCESSIBLE LIFT AND SELECTIVE REPLACEMENT OF ROOFING SYSTEMS. EXTERIOR IMPROVEMENTS WILL INCLUDE NEW COVERED ENTRIES, PAVING, SITE UTILITIES, LANDSCAPING AND A PHOTO VOLTAIC ARRAY.

DEFERRED APPROVALS

ALL DEFERRED SUBMITTALS SHALL FIRST BE SUBMITTED TO THE REGISTERED DESIGN PROFESSIONAL WHO SHALL REVIEW THEM AND FORWARD THEM TO THE BUILDING OFFICIAL WITH A NOTATION INDICATING THAT THE DEFERRED SUBMITTAL DOCUMENTS HAVE BEEN REVIEWED AND FOUND TO BE IN GENERAL CONFORMANCE WITH THE DESIGN OF THE BUILDING. THE DEFERRED SUBMITTAL ITEMS SHALL NOT BE INSTALLED UNTIL THE DEFERRED SUBMITTAL DOCUMENTS HAVE BEEN APPROVED BY THE BUILDING OFFICIAL. CBC 107.3.4.2

1. FIRE ALARM SYSTEM
2. PHOTO VOLTAIC SYSTEM, INCLUDING THE SUPPORT CANOPY STRUCTURAL DESIGN

PROJECT NAME

TEHAMA COUNTY CORNING VETERAN'S HALL

1620 SOLANO ST.
CORNING, CA

SHEET TITLE

TITLE SHEET

DRAWING STATUS

CONSTRUCTION DOCUMENTS

REVISIONS

Sym.	Description	Date

Drawn By	KP
Date Issued	2/13/2025
Scale	AS NOTED
Project No.	21-6497

SHEET No.

G001

Login Name: KarenP
Plot Date: February 13, 2025 - 11:38 am
File Name: N:\Projects\6000.Civic\2021\21-6497 Tehama Co. Corning Vets Hall\Drawings\CVH - Title Sheet.dwg
XREFS: x-CVH_Title Block

2022 CALIFORNIA GREEN BUILDING STANDARDS CODE NONRESIDENTIAL MANDATORY MEASURES

GREEN BUILDING NOTES

- PROVIDED BY GENERAL CONTRACTOR, U.O.N
- SEE CA GREEN BUILDING CODE (GBC) FOR FULL REQUIREMENTS

A. CONSTRUCTION WASTE REDUCTION

1. CA GBC 5.408.1 - CONSTRUCTION WASTE MANAGEMENT. RECYCLE AND/OR SALVAGE FOR REUSE A MINIMUM OF 65 PERCENT OF THE NON-HAZARDOUS CONSTRUCTION AND DEMOLITION WASTE IN ACCORDANCE WITH SECTION 5.408.1.1, 5.408.1.2 OR 5.408.1.3; OR MEET A LOCAL CONSTRUCTION AND DEMOLITION WASTE MANAGEMENT ORDINANCE, WHICHEVER IS MORE STRINGENT.
2. CA GBC 5.408.1.2 - WASTE MANAGEMENT COMPANY. UTILIZE A WASTE MANAGEMENT COMPANY THAT CAN PROVIDE VERIFIABLE DOCUMENTATION THAT THE PERCENTAGE OF CONSTRUCTION AND DEMOLITION WASTE MATERIAL DIVERTED FROM THE LANDFILL COMPLIES WITH THIS SECTION.
3. CA GBC 5.408.1.3 - WASTE STREAM REDUCTION ALTERNATIVE. THE COMBINED WEIGHT OF NEW CONSTRUCTION DISPOSAL THAT DOES NOT EXCEED TWO POUNDS PER SQUARE FOOT OF BUILDING AREA MAY BE DEEMED TO MEET THE 65 PERCENT MINIMUM REQUIREMENT AS APPROVED BY THE ENFORCING AGENCY.
4. CA GBC 5.408.1.4 - DOCUMENTATION. DOCUMENTATION SHALL BE PROVIDED TO THE ENFORCING AGENCY WHICH DEMONSTRATES COMPLIANCE WITH SECTIONS 5.408.1.1 THROUGH 5.408.1.3. THE WASTE MANAGEMENT PLAN SHALL BE UPDATED AS NECESSARY AND SHALL BE ACCESSIBLE DURING CONSTRUCTION FOR EXAMINATION BY THE ENFORCING AGENCY.
5. CA GBC 5.408.2 - UNIVERSAL WASTE. VERIFICATION SHALL BE PROVIDED THAT UNIVERSAL WASTE ITEMS AS SPECIFIED IN THIS SECTION AS WELL AS OTHER CALIFORNIA PROHIBITED UNIVERSAL WASTE MATERIALS ARE DISPOSED OF PROPERLY AND ARE DIVERTED FROM LANDFILLS.
6. CA GBC 5.408.3 - EXCAVATED SOIL AND LAND CLEARING DEBRIS. 100 PERCENT OF TREES, STUMPS, ROCKS AND ASSOCIATED VEGETATION AND SOILS RESULTING PRIMARILY FROM LAND CLEARING SHALL BE REUSED OR RECYCLED. FOR A PHASED PROJECT, SUCH MATERIAL MAY BE STOCKPILED ON SITE UNTIL THE STORAGE SITE IS DEVELOPED.

B. BUILDING MAINTENANCE AND OPERATION

1. CA GBC 5.410.1 - RECYCLING BY OCCUPANTS. PROVIDE READILY ACCESSIBLE AREAS THAT SERVE THE ENTIRE BUILDING AND ARE IDENTIFIED FOR THE DEPOSITING, STORAGE AND COLLECTION OF NON-HAZARDOUS MATERIALS FOR RECYCLING, INCLUDING (AT A MINIMUM) PAPER, CORRUGATED CARDBOARD, GLASS, PLASTICS, ORGANIC WASTE, AND METALS OR MEET A LAWFULLY ENACTED LOCAL RECYCLING ORDINANCE, IF MORE RESTRICTIVE. SEE EXCEPTIONS; COMPLY WITH "ADDITIONS" REQMNT.
2. CA GBC 5.410.2.4 - FUNCTIONAL PERFORMANCE TESTING. FUNCTIONAL PERFORMANCE TESTS SHALL DEMONSTRATE THE CORRECT INSTALLATION AND OPERATION OF EACH COMPONENT, SYSTEM AND SYSTEM- TO SYSTEM INTERFACE IN ACCORDANCE WITH THE APPROVED PLANS AND SPECIFICATIONS. FUNCTIONAL PERFORMANCE TESTING REPORTS SHALL CONTAIN INFORMATION ADDRESSING EACH OF THE BUILDING COMPONENTS TESTED, THE TESTING METHODS UTILIZED, AND INCLUDE ANY READINGS AND ADJUSTMENTS MADE. BY G.C.
3. CA GBC 5.410.2.5 - DOCUMENTATION AND TRAINING. A SYSTEMS MANUAL AND SYSTEMS OPERATIONS TRAINING ARE REQUIRED, INCLUDING OCCUPATIONAL SAFETY AND HEALTH ACT (OSHA) REQUIREMENTS IN CALIFORNIA CODE OF REGULATIONS (CCR), TITLE 8, SECTION 5142, AND OTHER RELATED REGULATIONS. BY G.C.
4. CA GBC 5.410.2.5.1 - SYSTEMS MANUAL. DOCUMENTATION OF THE OPERATIONAL ASPECTS OF THE BUILDING SHALL BE COMPLETED WITHIN THE SYSTEMS MANUAL AND DELIVERED TO THE BUILDING OWNER OR REPRESENTATIVE. BY G.C.
5. CA GBC 5.410.2.5.2 - SYSTEMS OPERATIONS TRAINING. A PROGRAM FOR TRAINING OF THE APPROPRIATE MAINTENANCE STAFF FOR EACH EQUIPMENT TYPE AND/OR SYSTEM SHALL BE DEVELOPED AND DOCUMENTED IN THE COMMISSIONING REPORT. BY G.C.
6. CA GBC 5.410.2.6 - COMMISSIONING REPORT. A REPORT OF COMMISSIONING PROCESS ACTIVITIES UNDERTAKEN THROUGH THE DESIGN AND CONSTRUCTION PHASES OF THE BUILDING PROJECT SHALL BE COMPLETED AND PROVIDED TO THE OWNER OR REPRESENTATIVE. BY DESIGN TEAM.

C. TESTING AND ADJUSTING

1. CA GBC 5.410.4 - TESTING AND ADJUSTING. A WRITTEN PLAN OF PROCEDURES FOR TESTING AND ADJUSTING THE HVAC SYSTEMS WILL BE DEVELOPED AND FOLLOWED FOR HVAC SYSTEMS AND CONTROLS, INDOOR AND OUTDOOR LIGHTING CONTROLS, AND WATER HEATING SYSTEMS. TESTING AND ADJUSTING PROCEDURES WILL BE IN ACCORDANCE WITH MANUFACTURER'S SPECIFICATIONS AND APPLICABLE STANDARDS.
2. CA GBC 5.410.4.3.1 - HVAC BALANCING. IN ADDITION TO TESTING AND ADJUSTING, BEFORE A NEW SPACE-CONDITIONING SYSTEM SERVING A BUILDING OR SPACE IS OPERATED FOR NORMAL USE, THE SYSTEM SHALL BE BALANCED IN ACCORDANCE WITH THE PROCEDURES DEFINED BY THE TESTING ADJUSTING AND BALANCING BUREAU NATIONAL STANDARDS; THE NATIONAL ENVIRONMENTAL BALANCING BUREAU PROCEDURAL STANDARDS; ASSOCIATED AIR BALANCE COUNCIL NATIONAL STANDARDS OR AS APPROVED BY THE ENFORCING AGENCY.
3. CA GBC 5.410.4.4 - REPORTING. AFTER COMPLETION OF TESTING, ADJUSTING AND BALANCING, A FINAL REPORT OF TESTING WILL BE PROVIDED BY THE INDIVIDUAL RESPONSIBLE FOR PERFOMING THE SERVICES. THESE REPORTS WILL BE PROVIDED TO THE ENFORCING AGENCY.
4. CA GBC 5.410.4.5 - OPERATION AND MAINTENANCE (O & M) MANUAL. THE BUILDING OWNER OR REPRESENTATIVE WILL BE PROVIDED WITH A DETAILED OPERATING AND MAINTENANCE INSTRUCTIONS AND COPIES OF GUARANTIES/WARRANTIES FOR EACH SYSTEM.

D. FINISH MATERIAL POLLUTION CONTROL

1. CA GBC 5.504.4.1, ITEM 1 - ADHESIVES, ADHESIVE BONDING PRIMERS, ADHESIVE PRIMERS, SEALANTS, SEALANT PRIMERS AND CAULKS SHALL COMPLY WITH AIR QUALITY MANAGEMENT DISTRICT RULES PER SCAQMD RULE 1168 VOC LIMITS; SEE GBC FOR FULL REQMNTS.
2. CA GBC 5.504.4.1, ITEM 2 - AEROSOL ADHESIVES AND SMALLER UNIT SIZES OF ADHESIVES AND SEALANT OR CAULKING COMPOUNDS (IN UNITS OF PRODUCT, LESS PACKAGING, WHICH DO NOT WEIGH MORE THAN ONE POUND AND DO NOT CONSIST OF MORE THAN 16 FLUID OUNCES) SHALL COMPLY WITH STATEWIDE VOC STANDARDS AND OTHER REQUIREMENTS, INCLUDING PROHIBITIONS ON USE OF CERTAIN TOXIC COMPOUNDS OF CCR TITLE 17 COMMENCING WITH SECTION 94507.
3. CA GBC 5.504.4.3 - ARCHITECTURAL PAINTS AND COATINGS SHALL COMPLY WITH GREEN BUILDING CODE TABLE 5.504.4.3. VERIFICATION OF COMPLIANCE WITH THIS SECTION SHALL BE PROVIDED AT THE REQUEST OF THE ENFORCING AGENCY.
4. CA GBC 5.504.4.4 - CARPET SYSTEMS, INCLUDING CUSHION AND ADHESIVE, TO COMPLY WITH GREEN BLDG CODE 5.504.4.4 REQUIREMENTS SUCH AS CRI GREEN LABEL PLUS AND OTHER OPTIONS LISTED.
5. CA GBC 5.504.4.5 COMPOSITE WOOD PRODUCTS - HARDWOOD PLYWOOD, PARTICLE BOARD AND MEDIUM DENSITY FIBERBOARD COMPOSITE WOOD PRODUCTS USED ON THE INTERIOR OR EXTERIOR OF THE BUILDING SHALL MEET THE REQUIREMENTS FOR FORMALDEHYDE PER GREEN BUILDING CODE TABLE 5.504.4.5. VERIFICATION OF COMPLIANCE WITH THIS SECTION SHALL BE PROVIDED AT THE REQUEST OF THE ENFORCING AGENCY.
6. CA GBC 5.504.4.6 - RESILIENT FLOORING SYSTEMS SHALL COMPLY WITH THE VOC EMISSION LIMITS DEFINED IN THE 2012 CHPS CRITERIA AND LISTED ON ITS HIGH PERFORMANCE PRODUCTS DATABASE. DOCUMENTATION SHALL BE PROVIDED VERIFYING THAT RESILIENT FLOORING MATERIALS MEET THE POLLUTANT EMISSION LIMITS.
7. CA GBC 5.504.4.7 - THERMAL INSULATION COMPLY WITH THE REQUIREMENTS OF THE CALIFORNIA DEPARTMENT OF PUBLIC HEALTH, "STANDARD METHOD FOR THE TESTING AND EVALUATION OF VOLATILE ORGANIC CHEMICAL EMISSIONS FROM INDOOR SOURCES USING ENVIRONMENTAL CHAMBERS," VERSION 1.2, JANUARY 2017 (EMISSION TESTING METHOD FOR CALIFORNIA SPECIFICATION 01350).

CA GBC 5.504.4.8 - ACOUSTICAL CEILINGS AND WALL PANELS COMPLY WITH THE REQUIREMENTS OF THE CALIFORNIA DEPARTMENT OF PUBLIC HEALTH, "STANDARD METHOD FOR THE TESTING AND EVALUATION OF VOLATILE ORGANIC CHEMICAL EMISSIONS FROM INDOOR SOURCES USING ENVIRONMENTAL CHAMBERS," VERSION 1.2, JANUARY 2017 (EMISSION TESTING METHOD FOR CALIFORNIA SPECIFICATION 01350).

E. QUALIFICATIONS

1. CA GBC 702.1 - INSTALLER TRAINING. HVAC SYSTEM INSTALLERS SHALL BE TRAINED AND CERTIFIED IN THE PROPER INSTALLATION OF HVAC SYSTEMS INCLUDING DUCTS AND EQUIPMENT BY A NATIONALLY OR REGIONALLY RECOGNIZED TRAINING OR CERTIFICATION PROGRAM. UNCERTIFIED PERSONS MAY PERFORM HVAC INSTALLATIONS WHEN UNDER THE DIRECT SUPERVISION AND RESPONSIBILITY OF A PERSON TRAINED AND CERTIFIED TO INSTALL HVAC SYSTEMS OR CONTRACTOR LICENSED TO INSTALL HVAC SYSTEMS.

F. COMPLIANCE FORMS AND WORKSHEETS

1. ALL COMPLIANCE FORMS AND WORKSHEETS IN CHAPTER 8 OF CA GBC FOR NON RESIDENTIAL CONSTRUCTION NEED TO BE COMPLETED BY CONTRACTOR OR SUBCONTRACTORS AND SUBMITTED TO THE ENFORCING AGENCY.

Login Name: KarenP
Plot Date: February 13, 2025 - 8:20 am
File Name: N:\Projects\6000.Civic\2021\21-6497 Tehama Co. Corning Vets Hall\Drawings\CVH-CalGreen.dwg
XREFS: x-CVH_Title Block

MANDATORY

CHAPTER 3
GREEN BUILDING
SECTION 301 GENERAL

301.1 SCOPE. Buildings shall be designed to include the green building measures specified as mandatory in the application checklists contained in this code. Voluntary green building measures are also included in the application checklists and may be included in the design and construction of structures covered by this code, but are not required unless adopted by a city, county, or city and county as specified in Section 101.7.

301.3 NONRESIDENTIAL ADDITIONS AND ALTERATIONS. [BSC-CG] The provisions of individual sections of Chapter 5 apply to newly constructed buildings, building additions of 1,000 square feet or greater, and/or building alterations with a permit valuation of $200,000 or above (for occupancies within the authority of California Building Standards Commission). Code sections relevant to additions and alterations shall only apply to the portions of the building being added or altered within the scope of the permitted work.

A code section will be designated by a banner to indicate where the code section only applies to newly constructed buildings [N] or to additions and/or alterations [A]. When the code section applies to both, no banner will be used.

301.3.1 Nonresidential additions and alterations that cause updates to plumbing fixtures only:

Note: On and after January 1, 2014, certain commercial real property, as defined in Civil Code Section 1101.3, shall have its noncompliant plumbing fixtures replaced with appropriate water-conserving plumbing fixtures under specific circumstances. See Civil Code Section 1101.1 *et seq.* for definitions, types of commercial real property affected, effective dates, circumstances necessitating replacement of noncompliant plumbing fixtures, and duties and responsibilities for ensuring compliance.

301.3.2 Waste Diversion. The requirements of Section 5.408 shall be required for additions and alterations whenever a permit is required for work.

301.4 PUBLIC SCHOOLS AND COMMUNITY COLLEGES. (see GBSC)
301.5 HEALTH FACILITIES. (see GBSC)

SECTION 302 MIXED OCCUPANCY BUILDINGS

302.1 MIXED OCCUPANCY BUILDINGS. In mixed occupancy buildings, each portion of a building shall comply with the specific green building measures applicable to each specific occupancy.

SECTION 303 PHASED PROJECTS

303.1 PHASED PROJECTS. For shell buildings and others constructed for future tenant improvements, only those code measures relevant to the building components and systems considered to be new construction (or newly constructed) shall apply.

303.1.1 Initial Tenant improvements. The provisions of this code shall apply only to the initial tenant improvements to a project. Subsequent tenant improvements shall comply with the scoping provisions in Section 301.3 non-residential additions and alterations.

ABBREVIATION DEFINITIONS:

HCD	Department of Housing and Community Development
BSC	California Building Standards Commission
DSA-SS	Division of the State Architect, Structural Safety
OSHPD	Office of Statewide Health Planning and Development
LR	Low Rise
HR	High Rise
AA	Additions and Alterations
N	New

CHAPTER 5
NONRESIDENTIAL MANDATORY MEASURES
DIVISION 5.1 PLANNING AND DESIGN

SECTION 5.101 GENERAL
5.101.1 SCOPE
The provisions of this chapter outline planning, design and development methods that include environmentally responsible site selection, building design, building siting and development to protect, restore and enhance the environmental quality of the site and respect the integrity of adjacent properties.

SECTION 5.102 DEFINITIONS
5.102.1 DEFINITIONS
The following terms are defined in Chapter 2 *(and are included here for reference)*

CUTOFF LUMINAIRES. Luminaires whose light distribution is such that the candela per 1000 lamp lumens does not numerically exceed 25 (2.5 percent) at an angle of 90 degrees above nadir, and 100 (10 percent) at a vertical angle of 80 degrees above nadir. This applies to all lateral angles around the luminaire.

LOW-EMITTING AND FUEL EFFICIENT VEHICLES.
Eligible vehicles are limited to the following:

1. Zero emission vehicle (ZEV), enhanced advanced technology PZEV (enhanced AT ZEV) or transitional zero emission vehicles (TZEV) regulated under CCR, Title 13, Section 1962.
2. High-efficiency vehicles, regulated by U.S. EPA, bearing a fuel economy and greenhouse gas rating od 9 oe 10 as regulated under 40 CFR Section 600 Subpart D.

NEIGHBORHOOD ELECTRIC VEHICLE (NEV). A motor vehicle that meets the definition of "low-speed vehicle" either in Section 385.5 of the Vehicle Code or in 49CFR571.500 (as it existed on July 1, 2000), and is certified to zero-emission vehicle standards.

TENANT-OCCUPANTS. Building occupants who inhabit a building during its normal hours of operation as permanent occupants, such as employees, as distinguished from customers and other transient visitors.

VANPOOL VEHICLE. Eligible vehicles are limited to any motor vehicle, other than a motortruck or truck tractor, designed for carrying more than 10 but not more than 15 persons including the driver, which is maintained and used primarily for the nonprofit work-related transportation of adults for the purpose of ridesharing.

Note: Source: Vehicle Code, Division 1, Section 668

ZEV. Any vehicle certified to zero-emission standards.

☐ CONTRACTOR TO FULFILL REQUIREMENTS OF THIS SECTION ON SITE DURING CONSTRUCTION

SECTION 5.106 SITE DEVELOPMENT

5.106.1 STORM WATER POLLUTION PREVENTION FOR PROJECTS THAT DISTURB LESS THAN ONE ACRE OF LAND. Newly constructed projects and additions which disturb less than one acre of land, and are not part of a larger common plan of development or sale, shall prevent the pollution of storm water runoff from the construction activities through one or more of the following measures:

5.106.1.1 Local ordinance. Comply with a lawfully enacted storm water management and/or erosion control ordinance.

5.106.1.2 Best Management Practices (BMPs). Prevent the loss of soil through wind or water erosion by implementing an effective combination of erosion and sediment control and good housekeeping BMPs.

1. Soil loss BMPs that should be considered for implementation as appropriate for each project include, but are not limited to, the following:
   a. Scheduling construction activity during dry weather, when possible.
   b. Preservation of natural features, vegetation, soil, and buffers around surface waters.
   c. Drainage swales or lined ditches to control stormwater flow.
   d. Mulching or hydroseeding to stabilize disturbed soils.
   e. Erosion control to protect slopes.
   f. Protection of storm drain inlets (gravel bags or catch basin inserts).
   g. Perimeter sediment control (perimeter silt fence, fiber rolls).
   h. Sediment trap or sediment basin to retain sediment on site.
   i. Stabilized construction exits.
   j. Wind erosion control.
   k. Other soil loss BMPs acceptable to the enforcing agency.
2. Good housekeeping BMPs to manage construction equipment, materials, non-stormwater discharges and wastes that should be considered for implementation as appropriate for each project include, but are not limited to, the following:
   a. Dewatering activities.
   b. Material handling and waste management.
   c. Building materials stockpile management.
   d. Management of washout areas (concrete, paints, stucco, etc.).
   e. Control of vehicle/equipment fueling to contractor's staging area.
   f. Vehicle and equipment cleaning performed off site.
   g Spill prevention and control.
   h. Other housekeeping BMPs acceptable to the enforcing agency.

5.106.2 STORMWATER POLLUTION PREVENTION FOR PROJECTS THAT DISTURB ONE OR MORE ACRES OF LAND. Comply with all lawfully enacted stormwater discharge regulations for projects that (1) disturb one acre or more of land, or (2) disturb less than one acre of land but are part of a larger common plan of development sale.

Note: Projects that (1) disturb one acre or more of land, or (2) disturb less than one acre of land but are part of the larger common plan of development or sale must comply with the post-construction requirements detailed in the applicable National Pollutant Discharge Elimination System (NPDES) General permit for Stormwater Discharges Associated with Construction and Land Disturbance Activities issued by the State Water Resources Control Board or the Lahontan Regional Water Quality Control Board (for projects in the Lake Tahoe Hydrologic Unit).

The NPDES permits require postconstruction runoff (post-project hydrology) to match the preconstruction runoff (pre-project hydrology) with the installation of postconstruction stormwater management measures. The NPDES permits emphasize runoff reduction through on-site stormwater use, interception, evapotranspiration, and infiltration through nonstructural controls, such as Low Impact Development (LID) practices, and conversation design measures. Stormwater volume that cannot be addressed using nonstructural practices is required to be captured in structural practices and be approved by the enforcing agency.

Refer to the current applicable permits on the State Water Resources Control Board website at: www.waterboards.ca.gov/constructionstormwater. Consideration to the stormwater runoff management measures should be given during the initial design process for appropriate integration into site development.

MANDATORY

X

5.106.4 BICYCLE PARKING. For buildings within the authority of California Building Standards Commission as specified in Section 103, comply with Section 5.106.4.1. For buildings within the authority of the Division of the State Architect pursuant to Section 105, comply with Section 5.106.4.2

5.106.4.1 Bicycle parking. [BSC-CG] Comply with Sections 5.106.4.1.1 and 5.106.4.1.2; or meet the applicable local ordinance, whichever is stricter.

5.106.4.1.1 Short-term bicycle parking. If the new project or an addition or alteration is anticipated to generate visitor traffic, provide permanently anchored bicycle racks within 200 feet of the visitors' entrance, readily visible to passers-by, for 5% of new visitor motorized vehicle parking spaces being added, with a minimum of one two-bike capacity rack.
Exception: Additions or alterations which add nine or less visitor vehicular parking spaces.

5.106.4.1.2 Long-term bicycle parking. For new buildings with tenant spaces that have 10 or more tenant-occupants, provide secure bicycle parking for 5 percent of the tenant-occupant vehicular parking spaces with a minimum of one bicycle parking facility.

5.106.4.1.3 For additions or alterations that add 10 or more tenant-occupant vehicular parking spaces, provide secure bicycle parking for 5 percent of the tenant vehicular parking spaces being added, with a minimum of one bicycle parking facility.

5.106.4.1.4 For new shell buildings in phased projects provide secure bicycle parking for 5 percent of the anticipated tenant-occupant vehicular parking spaces with a minimum of one bicycle parking facility.

5.106.4.1.5 Acceptable bicycle parking facility for Sections 5.106.4.1.2, 5.106.4.1.3, and 5.106.4.1.4 shall be convenient from the street and shall meet one of the following:

1. Covered, lockable enclosures with permanently anchored racks for bicycles;
2. Lockable bicycle rooms with permanently anchored racks; or
3. Lockable, permanently anchored bicycle lockers.

Note: Additional information on recommended bicycle accommodations may be obtained from Sacramento Area Bicycle Advocates.

5.106.4.2 Bicycle parking. [DSA-SS] For public schools and community colleges, comply with Sections 5.106.4.2.1 and 5.106.4.2.2

N/A
PROJECT DOES NOT FALL UNDER THIS CATEGORY

5.106.4.2.1 Student bicycle parking. Provide permanently anchored bicycle racks conveniently accessed with a minimum of four two-bike capacity racks per new building.
5.106.4.2.2 Staff bicycle parking. Provide permanent, secure bicycle parking conveniently accessed with a minimum of two staff bicycle parking spaces per new building. Acceptable bicycle parking facilities shall be convenient from the street or staff parking area and shall meet one of the following:

1. Covered, lockable enclosures with permanently anchored racks for bicycles;
2. Lockable bicycle rooms with permanently anchored racks; or
3. Lockable, permanently anchored bicycle lockers.

N/A
PROJECT DOES NOT FALL UNDER THIS CATEGORY

5.106.5.3 Electric vehicle (EV) charging. [N] Construction to provide electric vehicle infrastructure and facilitate electric vehicle charging shall comply with Section 5.106.5.3.1 and shall be provided in accordance with regulations in the California Building Code and the California Electrical Code.

Exceptions:
1. On a case-by-case basis where the local enforcing agency has determined compliance with this section is not feasible based upon one of the following conditions:
   a. Where there is no local utility power supply
   b. Where the local utility is unable to supply adequate power.
   c. Where there is evidence suitable to the local enforcement agency substantiating the local utility infrastructure design requirements, directly related to the implementation of Section 5.106.5.3, may adversely impact the construction cost of the project.
2. Parking spaces accessible only by automated mechanical car parking systems are not required to comply with this code section

5.106.5.3.1 EV capable spaces.
[N] EV capable spaces shall be provided in accordance with Table 5.106.5.3.1 and the following requirements:
1. Raceways complying with the California Electrical Code and no less that 1-inch (25 mm) diameter shall be provided and shall originate at a service panel or a subpanel(s) serving the area, and shall terminate in close proximity to the proposed location of the EV capable and into a suitable listed cabinet, box,enclosure or equivalent. A common raceway may be used to serve multiple EV charging spaces.
2. A service panel or subpanel (s) shall be provided with panel space and electrical load capacity for a dedicated 208/240 volt, 40-ampere minimum branch circuit for each EV capable space, with delivery of 30-ampere minimum to an installed EVSE at each EVCS.
3. The electrical system and any on-site distribution transformers shall have sufficient capacity to supply full rated amperage at each EV capable space.
4. The service panel or subpanel circuit directory shall identify the reserved overcurrent protective devices space(s) as "EV CAPABLE". The raceway termination location shall be permanently and visibly marked as "EV CAPABLE."

Note: A parking space served by electric vehicle supply equipment or designed as a future EV charging space shall count as at least one standard automobile parking space only for the purpose of complying with any applicable minimum parking space requirements established by an enforcement agency. See vehicle Code Section 22511.2 for further details.

TABLE 5.106.5.3.1

TOTAL NUMBER OF ACTUAL PARKING SPACES	NUMBER OF REQUIRED EV CAPABLE SPACES	NUMBER OF EVCS (EV CAPABLE SPACES PROVIDED WITH EVSE)^2
0-9	0	0
10-25	2	0
26-50	8	2
51-75	13	3
76-100	17	4
101-150	25	6
151-200	35	9
201 AND OVER	20% of total[1]	25% of EV capable spaces[1]

1. Where there is insufficient electrical supply.
2. The number of required EVCS (EV capable spaces provided with EVSE) in column 3 count towards the total number of required EV capable spaces shown in column 2.

5.106.5.3.2 Electric vehicle charging stations (EVCS)
EV capable spaces shall be provided with EVSE to create EVCS in the number indicated in Table 5.106.5.3.1. The EVCS required by Table 5.106.5.3.1 may be provided with EVSE in any combination of Level 2 and Direct Current Fast Charging (DCFC), except that at least one Level 2 EVSE shall be provided.

One EV charger with multiple connectors capable of charging multiple EVs simultaneously shall be permitted if the electrical load capacity required by Section 5.106.5.3.1 for each EV capable space is accumulatively supplied to the EV charger.

The installation of each DCFC EVSE shall be permitted to reduce the minimum number of required EV capable spaces without EVSE by five and reduce proportionally the required electrical load capacity to the service panel or subpanel.

5.106.5.3.3 Use of automatic load management systems (ALMS).
ALMS shall be permitted for EVCS. When ALMS is installed, the required electrical load capacity specified in Section
5.106.5.3.1 for each EVCS may be reduced when serviced by an EVSE controlled by an ALMS. Each EVSE controlled by an ALMS shall deliver a minimum 30 amperes to an EV when charging one vehicle and shall deliver a minimum 3.3 kW while simultaneously charging multiple EVs.

5.106.5.3.4 Accessible EVCS.
When EVSE is installed, accessible EVSC shall be provided in accordance with the *California Building Code*, Chapter 11B, Section 11B-228.3.
Note: For EVCS signs, refer to Caltrans Traffic Operations Policy Directive 13-01 (Zero Emission Vehicle Signs and Pavement Markings) or its successor(s).

5.106.5.4 Electric Vehicle (EV) charging: medium-duty and heavy-duty. [N]
Construction shall comply with section 5.106.5.4.1 to facilitate future installation of electric vehicle supply equipment (EVSE). Construction for warehouses, grocery stores and retail stores with planned off-street loading spaces shall also comply with Section 5.106.5.4.1 for future installation of medium- and heavy-duty EVSE.
Exceptions:
1. On a case-by-case basis where the local enforcing agency has determined compliance with this section is not feasible based upon one of the following conditions:
   a. Where there is no local utility power supply.
   b. Where the local utility is unable to supply adequate power.
   c. Where there is evidence suitable to the local enforcing agency substantiating that additional local utility infrastructure design requirements, directly related to the implementation of Section 5.106.5.3, may adversely impact the construction cost of the project.

When EVSE(s) is/are installed, it shall be in accordance with the *California Building Code*, the *California Electrical Code* and as follows:

5.106.5.4.1 Electric vehicle charging readiness requirements for warehouse, grocery stores and retail stores with planned off-street loading spaces.
[N] In order to avoid future demolition when adding EV charging supply and distribution equipment, spare raceways(s) or busway(s) and adequate capacity for transformers(s), service panels(s) or subpanel(s) shall be installed at the time of construction in accordance with the California Electrical Code. Construction plans and specifications shall include but are not limited to, the following:
1. The transformer, main service equipment and subpanel shall meet the minimum power requirement in Table 5.106.5.4.1 to accommodate the dedicated branch circuits for the future installation of EVSE.
2. The construction documents shall indicate on or more location(s) convenient to the planned offstreet loading space(s) reserved for medium-and heavy-duty ZEV charging cabinets and charging dispensers, and a pathway reserved for routing of conduit from the termination of the raceway(s) or busway(s) to the charging cabinet(s) and dispenser(s) as shown in Table 5.106.5.4.1
3. Raceway(s) or busway(s) originating at a main service panel or a subpanel(s) serving the area where potential future medium-and heavy-duty EVSE will be located and shall terminate in close proximity to the potential future location of the charging equipments for medium- and heavy-duty vehicles.
4. The raceway(s) or busway(s) shall be sufficient size to carry the minimum additional system load to the future location of the charging for medium- and heavy-duty ZEVs as shown in Table 5.106.5.4.1.

MANDATORY

N/A
PROJECT DOES NOT FALL UNDER THIS CATEGORY

TABLE 5.106.5.4.1 RACEWAY CONDUIT AND PANEL POWER REQUIREMENTS FOR MEDIUM- AND HEAVY-DUTY EVSE [N]

BUILDING TYPE	BUILDING SIZE (SQ. FT.)	NUMBER OF OFF-STREET LOADING SPACES	ADDITIONAL CAPACITY REQUIRED (KVA) FOR RACEWAY & BUSWAY AND TRANSFORMER & PANEL
Grocery	10,000 to 90,000	1 or 2	200
		3 or Greater	400
	Greater than 90,000	1 or Greater	400
Retail	10,000 to 135,000	1 or 2	200
		3 or Greater	400
	Greater than 135,000	1 or Greater	400
Warehouse	20,000 to 256,000	1 or 2	200
		3 or Greater	400
	Greater than 256,000	1 or Greater	400

X
SEE ELECTRICAL DRAWINGS FOR COMPLIANCE.

5.106.8 LIGHT POLLUTION REDUCTION. [N]. I Outdoor lighting systems shall be designed and installed to comply with the following:

1. The minimum requirements in the California Energy Code for Lighting Zones 0-4 as defined in Chapter 10, Section 10-114 of the California Administrative Code; and
2. Backlight (B) ratings as defined in IES TM-15-11 (shown in Table A-1 in Chapter 8);
3. Uplight and Glare ratings as defined in California Energy Code (shown in Tables 130.2-A and 130.2-B in Chapter 8) and
4. Allowable BUG ratings not exceeding those shown in Table 5.106.8, [N] or Comply with a local ordinance lawfully enacted pursuant to Section 101.7, whichever is more stringent.

Exceptions: [N]

1. Luminaires that qualify as exceptions in Sections 130.2 (b) and 140.7 of the California Energy Code.
2. Emergency lighting.
3. Building facade meeting the requirements in Table 140.7-B of the California Energy Code, Part 6.
4. Custom lighting features as allowed by the local enforcing agency, as permitted by Section 101.8 Alternate materials, designs and methods of construction.
5. Luminaires with less than 6,200 initial luminaire lumens.

TABLE 5.106.8 [N] MAXIMUM ALLOWABLE BACKLIGHT, UPLIGHT AND GLARE (BUG) RATINGS [1,2]

ALLOWABLE RATING	LIGHTING ZONE LZ0	LIGHTING ZONE LZ1	LIGHTING ZONE LZ2	LIGHTING ZONE LZ3	LIGHTING ZONE LZ4
MAXIMUM ALLOWABLE BACKLIGHT RATING [3]					
Luminaire greater than 2 mounting heights (MH) from property line	N/A	No Limit	No Limit	No Limit	No Limit
Luminaire back hemisphere is 1-2 MH from property line	N/A	B2	B3	B4	B4
Luminaire back hemisphere is 0.5-1 MH from property line	N/A	B1	B2	B3	B3
Luminaire back hemisphere is less than 0.5 MH from property line	N/A	B0	B0	B1	B2
MAXIMUM ALLOWABLE UPLIGHT RATING (U)					
For area lighting [3]	N/A	U0	U0	U0	U0
For all other outdoor lighting,including decorative luminaires	N/A	U1	U2	U3	UR
MAXIMUM ALLOWABLE GLARE RATING [5] **(G)**					
MAXIMUM ALLOWABLE GLARE RATING [5] **(G)**	N/A	G1	G2	G3	G4
MAXIMUM ALLOWABLE GLARE RATING [5] **(G)**	N/A	G0	G1	G1	G2
MAXIMUM ALLOWABLE GLARE RATING [5] **(G)**	N/A	G0	G0	G1	G1
MAXIMUM ALLOWABLE GLARE RATING [5] **(G)**	N/A	G0	G0	G0	G1

1. IESNA Lighting Zones 0 and 5 are not applicable; refer to Lighting Zones as defined in the *California Energy Code* and Chapter 10 of the *California Administrative Code.*

2. For property lines that abut public walkways, bikeways, plazas and parking lots, the property line may be considered to be 5 feet beyond the actual property line for purpose of determining compliance with this section. For property lines that abut public roadways and public transit corridors, the property line may be considered to be the centerline of the public roadway or public transit corridor for the purpose of determining compliance with this section.

3. General lighting luminaires in areas such as outdoor parking, sales or storage lots shall meet these reduced ratings. Decorative luminaries located in these areas shall meet *U*-value limits for "all other outdoor lighting"

5.106.8.1 Facing- Backlight
Luminaries within 2MH of a property line shall be oriented so that the nearest property line is behind the fixture, and shall comply with the backlight rating specified in Table 5.106.8 based on the lighting zone and distance to the nearest point of that property line.
Exception: Corners. If two property lines (or two segments of the same property line) have equidistant point to the luminaire, then the luminaire may be oriented so that the intersection of the two lines (the corner) is directly behind the luminaire. The luminaire shall still use the distance to the nearest points(s) on the property lines to determine the required backlight rating.

5.106.8.2 Facing-Glare.
For luminaires covered by 5.106.8.1, if a property line also exists within or extends into the front hemisphere within 2MH of the luminaire then the luminaire shall comply with the more stringent glare rating specified in Table 5.106.8 based on the lighting zone and distance to the nearest point on the nearest property line within the front hemisphere.

Note: [N]
1. See also *California Building Code*, Chapter 12, Section 1205.6 for college campus lighting requirements for parking facilities and walkways.
2. Refer to Chapter 8 (Compliance Forms, Worksheets and Reference Material) for IES TM-15-11 Table A-1, *California Energy Code* Tables 130.2-A and 130.2-B.
3. Refer to the *California Building Code* for requirements for additions and alterations.

X
SEE CIVIL DRAWINGS FOR DRAINAGE PATH

5.106.10 GRADING AND PAVING. Construction plans shall indicate how site grading or a drainage system will manage all surface water flows to keep water from entering buildings. Examples of methods to manage surface water include, but are not limited to, the following:

1. Swales.
2. Water collection and disposal systems.
3. French drains.
4. Water retention gardens.
5. Other water measures which keep surface water away from buildings and aid in groundwater recharge.
   Exception: Additions and alterations not altering the drainage path.

N/A
DOES NOT APPLY

5.106.12 SHADE TREES [DSA-SS]. Shade Trees shall be planted to comply with Sections 5.106.12.1, 5.106.12.2, and 5.106.12.3. Percentages shown shall be measured at noon on the summer solstice. Landscape irrigation necessary to establish and maintain tree health shall comply with Section 5.304.6.

5.106.12.1 Surface parking areas. Shade tree plantings, minimum #10 container size or equal, shall be installed to provide shade over 50 percent of the parking area within 15 years.

Exceptions: Surface parking area covered by solar photovoltaic shade structures with roofing materials that comply with Table A5.106.11.2.2 in Appendix A5 shall be permitted in whole or in part in lieu of shade tree planting.

5.106.12.2 Landscape areas. Shade tress plantings, minimum #10 container size or equal shall be installed to provide shade of 20% of the landscape area within 15 years.

Exceptions: Playfields for organized sport activity are not included in the total area calculation.

5.106.12.3. Hardscape areas. Shade tree plantings, minimum #10 container size or equal shall be installed to provide shade over 20 percent of the hardscape area within 15 years.

Exceptions:
1. Walks, hardscape areas covered by solar photovoltaic shade structures or shade structures with roofing materials that comply with Table A5.106.11.2.2 in Appendix A5 shall be permitted in whole or in part in lieu of shade tree planting.
2. Designated and marked play areas of organized sport activity are not included in the total area calculation.

Copyright © 2025
All ideas, designs, arrangements and plans indicated or represented by this drawing are owned by, and the property of, NICHOLS, MELBURG and ROSSETTO and were created, evolved and developed for use on, and in conjunction with, the specified project. None of such ideas, designs, arrangements or plans shall be used by, or disclosed to any person, firm or corporation for any purpose whatsoever without the written permission of NICHOLS, MELBURG and ROSSETTO.

NM&R
NICHOLS MELBURG & ROSSETTO
ARCHITECTS + ENGINEERS
300 KNOLLCREST DRIVE
REDDING, CA. 96002
(530) 222-3300 (530) 222-3538 FAX
http://www.nmrdesign.com

CONSULTANTS

LICENSE STAMPS

LICENSED ARCHITECT
KYLE MATTI
C 27504
REN. 10/31/25
STATE OF CALIFORNIA

PROJECT NAME

TEHAMA COUNTY
CORNING
VETERAN'S HALL

1620 SOLANO ST.
CORNING, CA

SHEET TITLE

CALGREEN CHECKLIST

DRAWING STATUS

CONSTRUCTION DOCUMENTS

REVISIONS

Sym.	Description	Date

Drawn By	KP
Date Issued	2/13/2025
Scale	N.T.S.
Project No.	21-6497

SHEET No.

G010

2022 CALIFORNIA GREEN BUILDING STANDARDS CODE NONRESIDENTIAL MANDATORY MEASURES

MANDATORY

DIVISION 5.2 ENERGY EFFICIENCY

SECTION 5.201 GENERAL

5.201.1 Scope [BSC-CG]. *California Energy Code [DSA-SS]*. For the purposes of mandatory energy efficiency standards in this code, the California Energy Commission will continue to adopt mandatory building standards.

DIVISION 5.3 WATER EFFICIENCY AND CONSERVATION

SECTION 5.301 GENERAL

5.301.1 Scope. The provisions of this chapter shall establish the means of conserving water use indoors, outdoors and in wastewater conveyance.

SECTION 5.302 DEFINITIONS

5.302.1 Definitions. The following terms are defined in Chapter 2 *(and are included here for reference)*

EVAPOTRANSPIRATION ADJUSTMENT FACTOR (ETAF) [DSA-SS]. An adjustment factor when applied to reference evapotranspiration that adjusts for plant factors and irrigation efficiency, which ae two major influences on the amount of water that needs to be applied to the landscape.

FOOTPRINT AREA [DSA-SS]. The total area of the furthest exterior wall of the structure projected to natural grade, not including exterior areas such as stairs, covered walkways, patios and decks.

METERING FAUCET. A self-closing faucet that dispenses a specific volume of water for each actuation cycle. The volume or cycle duration can be fixed or adjustable.

GRAYWATER. Pursuant to Health and Safety Code Section 17922.12, "graywater" means untreated wastewater that has not been contaminated by any toilet discharge, has not been affected by infectious, contaminated, or unhealthy bodily wastes, and does not present a threat from contamination by unhealthful processing, manufacturing, or operating wastes. "Graywater" includes, but is not limited to wastewater from bathtubs, showers, bathroom washbasins, clothes washing machines and laundry tubs, but does not include waste water from kitchen sinks or dishwashers.

MODEL WATER EFFICIENT LANDSCAPE ORDINANCE (MWELO). The California ordinance regulating landscape design, installation and maintenance practices that will ensure commercial, multifamily and other developer installed landscapes greater than 2500 square feet meet an irrigation water budget developed based on landscaped area and climatological parameters.

MODEL WATER EFFICIENT LANDSCAPE ORDINANCE (MWELO). [HCD] The California model ordinance (California Code of Regulations, Title 23, Division 2, Chapter 2.7), regulating landscape design, installation and maintenance practices. Local agencies are required to adopt the updated MWELO, or adopt a local ordinance at least as effective as the MWELO.

POTABLE WATER. Water that is drinkable and meets the U.S. Environmental Protection Agency (EPA) Drinking Water Standards. See definition in the California Plumbing Code, Part 5.

POTABLE WATER. [HCD] Water that is satisfactory for drinking, culinary, and domestic purposes, and meets the U.S. Environmental Protection Agency (EPA) Drinking Water Standards and the requirements of the Health Authority Having Jurisdiction.

RECYCLED WATER. Water which, as a result of treatment of waste, is suitable for a direct beneficial use or a controlled use that would not otherwise occur [Water Code Section 13050 (n)]. Simply put, recycled water is water treated to remove waste matter attaining a quality that is suitable to use the water again.

SUBMETER. [HCD 1] A secondary device beyond a meter that measures water consumption of an individual rental unit within a multiunit residential structure or mixed-use residential and commercial structure. (See Civic Code Section 1954.202 (g) and Water code Section 517 for additional details.)

WATER BUDGET. Is the estimated total landscape irrigation water use which shall not exceed the maximum applied water allowance calculated in accordance with the Department of Water Resources Model Efficient Landscape Ordinance (MWELO).

N/A — PROJECT DOES NOT FALL UNDER THIS CATEGORY

SECTION 5.303 INDOOR WATER USE

5.303.1 METERS. Separate submeters or metering devices shall be installed for the uses described in Sections 503.1.1 and 503.1.2.

5.303.1.1 Buildings in excess of 50,000 square feet. Separate submeters shall be installed as follows:

1. For each individual leased, rented or other tenant space within the building projected to consume more than 100 gal/day (380 L/day), including, but not limited to, spaces used for laundry or cleaners, restaurant or food service, medical or dental office, laboratory, or beauty salon or barber shop.
2. Where separate submeters for individual building tenants are unfeasible, for water supplied to the following subsystems:
   a. Makeup water for cooling towers where flow through is greater than 500 gpm (30 L/s).
   b. Makeup water for evaporative coolers greater than 6 gpm (0.04 L/s).
   c. Steam and hot water boilers with energy input more than 500,000 Btu/h (147 kW).

5.303.1.2 Excess consumption. A separate submeter or metering device shall be provided for any tenant within a new building or within an addition that is projected to consume more than 1,000 gal/day.

☐ CONTRACTOR TO FULFILL REQUIREMENTS OF THIS SECTION ON SITE DURING CONSTRUCTION

5.303.3 WATER CONSERVING PLUMBING FIXTURES AND FITTINGS. Plumbing fixtures (water closets and urinals) and fittings (faucets and showerheads) shall comply with the following:

5.303.3.1 Water Closets. The effective flush volume of all water closets shall not exceed 1.28 gallons per flush. Tank-type water closets shall be certified to the performance criteria of the U.S. EPA WaterSense Specification for Tank-Type toilets.

Note: The effective flush volume of dual flush toilets is defined as the composite, average flush volume of two reduced flushes and one full flush.

5.303.3.2 Urinals.

5.303.3.2.1 Wall-mounted Urinals. The effective flush volume of wall-mounted urinals shall not exceed 0.125 gallons per flush.

5.303.3.2.2 Floor-mounted Urinals. The effective flush volume of floor-mounted or other urinals shall not exceed 0.5 gallons per flush.

5.303.3.3 Showerheads. [BSC-CG]

5.303.3.3.1 Single showerhead. Showerheads shall have a maximum flow rate of not more than 1.8 gallons per minute at 80 psi. Showerheads shall be certified to the performance criteria of the U.S. EPA WaterSense Specification for Showerheads.

5.303.3.3.2 Multiple showerheads serving one shower. When a shower is served by more than one showerhead, the combined flow rate of all the showerheads and/or other shower outlets controlled by a single valve shall not exceed 1.8 gallons per minute at 80 psi, or the shower shall be designed to allow only one shower outlet to be in operation at a time.
Note: A hand-held shower shall be considered a showerhead.

☐ CONTRACTOR TO FULFILL REQUIREMENTS OF THIS SECTION ON SITE DURING CONSTRUCTION

5.303.3.4 Faucets and fountains.

5.303.3.4.1 Nonresidential Lavatory faucets. Lavatory faucets shall have a maximum flow rate of not more than 0.5 gallons per minute at 60 psi.

5.303.3.4.2 Kitchen faucets. Kitchen faucets shall have a maximum flow rate of not more than 1.8 gallons per minute at 60 psi. Kitchen faucets may temporarily increase the flow above the maximum rate, but not to exceed 2.2 gallons per minute at 60 psi, and must default to a maximum flow rate of 1.8 gallons per minute at 60 psi.

5.303.3.4.3 Wash fountains. Wash fountains shall have a maximum flow rate of not more than1.8 gallons per minute/20 [rim space (inches) at 60 psi].

5.303.3.4.4 Metering faucets. Metering faucets shall not deliver more than 0.20 gallons per cycle.

5.303.3.4.5 Metering faucets for wash fountains. Metering faucets for wash fountains shall have a maximum flow rate of not more than 0.20 gallons per minute/20 [rim space (inches) at 60 psi].

Note: Where complying faucets are unavailable, aerators or other means may be used to achieve reduction.

5.303.3.4.6 Pre-rinse spray value
When installed, shall meet the requirements in the *California Code of Regulations*, Title 20 (Appliance Efficiency Regulations), Section 1605.1 (h)(4) Table H-2, Section 1605.3 (h)(4)(A), and Section 1607 (d)(7), and shall be equipped with an integral automatic shutoff.

FOR REFERENCE ONLY: The following table and code section have been reprinted from the *California Code of Regulations*, Title 20 (Appliance Efficiency Regulations), Section 1605.1 (h)(4) and Section 1605.3 (h)(4)(A).

TABLE H-2

STANDARDS FOR COMMERCIAL PRE-RINSE SPRAY VALUES MANUFACTURED ON OR AFTER JANUARY 28, 2019

PRODUCT CLASS [spray force in ounce force (ozf)]	MAXIMUM FLOW RATE (gpm)
Product Class 1 (≤ 5.0 ozf)	1.00
Product Class 2 (> 5.0 ozf and ≤ 8.0 ozf)	1.20
Product Class 3 (> 8.0 ozf)	1.28

☐ CONTRACTOR TO FULFILL REQUIREMENTS OF THIS SECTION ON SITE DURING CONSTRUCTION

5.303.4 COMMERCIAL KITCHEN EQUIPMENT.

5.303.4.1 Food Waste Disposers. Disposers shall either modulate the use of water to no more than 1 gpm when the disposer is not in use (not actively grinding food waste/no-load) or shall automatically shut off after no more than 10 minutes of inactivity. Disposers shall use no more than 8 gpm of water.
Note: This code section does not affect local jurisdiction authority to prohibit or require disposer installation.

5.303.5 AREAS OF ADDITION OR ALTERATION. For those occupancies within the authority of the California Building Standards Commission as specified in Section 103, the provisions of Section 5.303.3 and 5.303.4 shall apply to new fixtures in additions or areas of alteration to the building.

5.303.6 STANDARDS FOR PLUMBING FIXTURES AND FITTINGS. Plumbing fixtures and fittings shall be installed in accordance with the *California Plumbing Code*, and shall meet the applicable standards referenced in Table 1701.1 of the *California Plumbing Code* and in Chapter 6 of this code.

X — SEE LANDSCAPE PLANS FOR COMPLIANCE.

SECTION 5.304 OUTDOOR WATER USE

5.304.1 OUTDOOR POTABLE WATER USE IN LANDSCAPE AREAS. Nonresidential developments shall comply with a local water efficient landscape ordinance or the current California Department of Water Resources' Model Water Efficient Landscape Ordinance (MWELO), whichever is more stringent.

Notes:
1. The Model Water Efficient Landscape Ordinance (MWELO) is located in the California Code of Regulations, Title 23, Chapter 2.7, Division 2.
2. MWELO and supporting documents, including a water budget calculator, are available at: https://www.water.ca.gov/.

MANDATORY

N/A — PROJECT DOES NOT FALL UNDER THIS CATEGORY

5.304.6 OUTDOOR POTABLE WATER USE IN LANDSCAPE AREAS. For public schools and community colleges, landscape projects as described in Sections 5.304.6.1 and 5.304.6.2 shall comply with the California Department of Water Resources Model Water Efficient Landscape Ordinance (MWELO) commencing with Section 490 of Chapter 2.7, Division 2, Title 23, *California Code of Regulations*, except that the evapotranspiration adjustment factor (ETAF) shall be 0.65 with an additional water allowance for special landscape areas (SLA) of 0.35.

Exception: Any project with an aggregate landscape area of 2,500 square feet or less may comply with the prescriptive measures contained in Appendix D of the MWELO.

5.304.6.1 Newly constructed landscapes. New construction projects with an aggregate landscape area equal to or greater than 500 square feet.

5.304.6.2 Rehabilitated landscapes. Rehabilitated landscape projects with an aggregate landscape area equal to or greater than 1,200 square feet.

DIVISION 5.4 MATERIAL CONSERVATION AND RESOURCE EFFICIENCY

SECTION 5.401 GENERAL

5.401.1 SCOPE. The provisions of this chapter shall outline means of achieving material conservation and resource efficiency through protection of buildings from exterior moisture, construction waste diversion, employment of techniques to reduce pollution through recycling of materials, and building commissioning or testing and adjusting.

SECTION 5.402 DEFINITIONS

5.402.1 DEFINITIONS. The following terms are defined in Chapter 2 *(and are included here for reference)*

ADJUST. To regulate fluid flow rate and air patterns at the terminal equipment, such as to reduce fan speed or adjust a damper.

BALANCE. To proportion flows within the distribution system, including sub-mains, branches and terminals, according to design quantities.

BUILDING COMMISSIONING. A systematic quality assurance process that spans the entire design and construction process, including verifying and documenting that building systems and components are planned, designed, installed, tested, operated and maintained to meet the owner's project requirements.

ORGANIC WASTE. Food waste, green waste, landscape and pruning wste, nonhazardous wood waste, and food soiled paper waste that is mixed in with food waste.

TEST. A procedure to determine quantitative performance of a system or equipment

X — FLASHING PROVIDED. SEE SHEET A910

SECTION 5.407 WATER RESISTANCE AND MOISTURE MANAGEMENT

5.407.1 WEATHER PROTECTION. Provide a weather-resistant exterior wall and foundation envelope as required by California Building Code Section 1402.2 (Weather Protection), manufacturer's installation instructions or local ordinance, whichever is more stringent.

5.407.2 MOISTURE CONTROL. Employ moisture control measures by the following methods.

5.407.2.1 Sprinklers. Design and maintain landscape irrigation systems to prevent spray on structures.

5.407.2.2 Entries and openings. Design exterior entries and/or openings subject to foot traffic or wind-driven rain to prevent water intrusion into buildings as follows:

5.407.2.2.1 Exterior door protection. Primary exterior entries shall be covered to prevent water intrusion by using nonabsorbent floor and wall finishes within at least 2 feet around and perpendicular to such openings plus at least one of the following:

1. An installed awning at least 4 feet in depth.
2. The door is protected by a roof overhang at least 4 feet in depth.
3. The door is recessed at least 4 feet.
4. Other methods which provide equivalent protection.

5.407.2.2.2 Flashing. Install flashings integrated with a drainage plane.

☐ CONTRACTOR TO FULFILL THIS REQUIREMENT ON SITE DURING CONSTRUCTION.

SECTION 5.408 CONSTRUCTION WASTE REDUCTION, DISPOSAL AND RECYCLING

5.408.1 CONSTRUCTION WASTE MANAGEMENT. Recycle and/or salvage for reuse a minimum of 65% of the non-hazardous construction and demolition waste in accordance with Section 5.408.1.1, 5.408.1.2 or 5.408.1.3; or meet a local construction and demolition waste management ordinance, whichever is more stringent.

5.408.1.1 Construction waste management plan. Where a local jurisdiction does not have a construction and demolition waste management ordinance, submit a construction waste management plan that:

1. Identifies the construction and demolition waste materials to be diverted from disposal by efficient usage, recycling, reuse on the project or salvage for future use or sale.
2. Determines if construction and demolition waste materials will be sorted on-site (source-separated) or bulk mixed (single stream).
3. Identifies diversion facilities where construction and demolition waste material collected will be taken.
4. Specifies that the amount of construction and demolition waste materials diverted shall be calculated by weight or volume, but not by both.

5.408.1.2 Waste Management Company. Utilize a waste management company that can provide verifiable documentation that the percentage of construction and demolition waste material diverted from the landfill complies with this section.

Note: The owner or contractor shall make the determination if the construction and demolition waste material will be diverted by a waste management company.

Exceptions to Sections 5.408.1.1 and 5.408.1.2:

1. Excavated soil and land-clearing debris.
2. Alternate waste reduction methods developed by working with local agencies if diversion or recycle facilities capable of compliance with this item do not exist.
3. Demolition waste meeting local ordinance or calculated in consideration of local recycling facilities and markets.

5.408.1.3 Waste stream reduction alternative. The combined weight of new construction disposal that does not exceed two pounds per square foot of building area may be deemed to meet the 65% minimum requirement as approved by the enforcing agency.

5.408.1.4 Documentation. Documentation shall be provided to the enforcing agency which demonstrates compliance with Sections 5.408.1.1, through 5.408.1.3. The waste management plan shall be updated as necessary and shall be accessible during construction for examination by the enforcing agency.

Notes:
1. Sample forms found in "A Guide to the California Green Building Standards Code (Nonresidential)" located www.dgs.ca.gov/BSC/Resources/Page-Content/Building-Standards-Commission-Resources-List-Folder/CALGreen may be used to assist in documenting compliance with the waste management plan.
2. Mixed construction and demolition debris processors can be located at the California Department of Resources Recycling and Recovery (CalRecycle).

☐ CONTRACTOR TO FULFILL THIS REQUIREMENT ON SITE DURING CONSTRUCTION.

5.408.2 UNIVERSAL WASTE. [A] Additions and alterations to a building or tenant space that meet the scoping provisions in Section 301.3 for nonresidential additions and alterations, shall require verification that Universal Waste items such as fluorescent lamps and ballast and mercury containing thermostats as well as other California prohibited Universal Waste materials are disposed of properly and are diverted from landfills. A list of prohibited Universal Waste materials shall be included in the construction documents.

Note: Refer to the Universal Waste Rule link at: http://www.dtsc.ca.gov/universalwaste/

☐ CONTRACTOR TO FULFILL THIS REQUIREMENT ON SITE DURING CONSTRUCTION.

5.408.3 EXCAVATED SOIL AND LAND CLEARING DEBRIS. 100 percent of trees, stumps, rocks and associated vegetation and soils resulting primarily from land clearing shall be reused or recycled. For a phased project, such material may be stockpiled on site until the storage site is developed.

Exception: Reuse, either on or off-site, of vegetation or soil contaminated by disease or pest infestation.

Notes:
1. If contamination by disease or pest infestation is suspected, contact the County Agricultural Commissioner and follow its direction for recycling or disposal of the material.
2. For a map of know pest and/or disease quarantine zones, consult with the California Department of Food and Agriculture. (www.cdfa.ca.gov)

N/A — PROJECT DOES NOT FALL UNDER THIS CATEGORY

SECTION 5.410 BUILDING MAINTENANCE AND OPERATIONS

5.410.1 RECYCLING BY OCCUPANTS. Provide readily accessible areas that serve the entire building and are identified for the depositing, storage and collection of non-hazardous materials for recycling, including (at a minimum) paper, corrugated cardboard, glass, plastics, organic waste, and metals or meet a lawfully enacted local recycling ordinance, if more restrictive.

Exception: Rural jurisdictions that meet and apply for the exemption in Public Resources Code 42649.82 (a)(2)(A) et seq. shall also be exempt from the organic waste portion of this section.

5.410.1.1 Additions. All additions conducted within a 12-month period under single or multiple permits, resulting in an increase of 30% or more in floor area, shall provide recycling areas on site.

Exception: Additions within a tenant space resulting in less than a 30% increase in the tenant space floor area.

5.410.1.2 Sample ordinance. Space allocation for recycling areas shall comply with Chapter 18, Part 3, Division 30 of the *Public Resources Code*. Chapter 18 is known as the California Solid Waste Reuse and Recycling Access Act of 1991 (Act).

Note: A sample ordinance for use by local agencies may be found in Appendix A of the document at the CalRecycle's web site.

MANDATORY

N/A — PROJECT DOES NOT FALL UNDER THIS CATEGORY

5.410.2 COMMISSIONING. [N] New buildings 10,000 square feet and over. For new buildings 10,000 square feet and over, building commissioning shall be included in the design and construction processes of the building project to verify that the building systems and components meet the owner's or owner representative's project requirements. Commissioning shall be performed in accordance with this section by trained personnel with experience on projects of comparable size and complexity. For I-occupancies that are not regulated by OSHPD or for I-occupancies and L-occupancies that are not regulated y the California Energy Code Section 100.0 Scope, all requirements in Sections 5.410.2 through 5.410.2.6 shall apply.

Note: For energy-related systems under the scope (Section 100) of the California Energy Code, including heating, ventilation, air conditioning (HVAC) systems and controls, indoor lighting systems and controls, as well as water heating systems and controls, refer to California Energy Code Section 120.8 for commissioning requirements

Commissioning requirements shall include:

1. Owner's or Owner representative's project requirements.
2. Basis of design.
3. Commissioning measures shown in the construction documents.
4. Commissioning plan.
5. Functional performance testing.
6. Documentation and training.
7. Commissioning report.

Exceptions:

1. Unconditioned warehouses of any size.
2. Areas less than 10,000 square feet used for offices or other conditioned accessory spaces within unconditioned warehouses.
3. Tenant improvements less than 10,000 square feet as described in Section 303.1.1.
4. Open parking garages of any size, or open parking garage areas, of any size, within a structure.

Note: For the purposes of this section, unconditioned shall mean a building, area, or room which does not provide heating and or air conditioning.

Informational Notes:

1. IAS AC 476 is an accreditation criteria for organizations providing training and/or certification of commissioning personnel. AC 476 is available to the Authority Having Jurisdiction as a reference for qualifications of commissioning personnel. AC 476 des not certify individuals to conduct functional performance tests or to adjust and balance systems.

2. Functional performance testing for heating, ventilation, air conditioning systems and lighting controls must be performed in compliance with the *California Energy Code*.

N/A — PROJECT DOES NOT FALL UNDER THIS CATEGORY

5.410.2.1 Owner's or Owner Representative's Project Requirements (OPR). [N] The expectations and requirements of the building appropriate to its phase shall be documented before the design phase of the project begins. This documentation shall include the following:
1. Environmental and sustainability goals.
2. Building sustainable goals.
3. Indoor environmental quality requirements.
4. Project program, including facility functions and hours of operation, and need for after hours operation.
5. Equipment and systems expectations.
6. Building occupant and operation and maintenance (O&M) personnel expectations.

5.410.2.2 Basis of Design (BOD). [N] A written explanation of how the design of the building systems meets the OPR shall be completed at the design phase of the building project. The Basis of Design document shall cover the following systems:

1. Renewable energy systems.
2. Landscape irrigation systems.
3. Water reuse system.

5.410.2.3 Commissioning plan. [N] Prior to permit issuance a commissioning plan shall be completed to document how the project will be commissioned. The commissioning plan shall include the following:
1. General project information.
2. Commissioning goals.
3. Systems to be commissioned. Plans to test systems and components shall include:
   a. An explanation of the original design intent.
   b. Equipment and systems to be tested, including the extent of tests.
   c. Functions to be tested.
   d. Conditions under which the test shall be performed.
   e. Measurable criteria for acceptable performance.
4. Commissioning team information.
5. Commissioning process activities, schedules and responsibilities. Plans for the completion of commissioning shall be included.

☐ CONTRACTOR TO FULFILL REQUIREMENTS ON SITE DURING CONSTRUCTION.

5.410.2.4 Functional performance testing. [N] Functional performance tests shall demonstrate the correct installation and operation of each component, system and system-to-system interface in accordance with the approved plans and specifications. Functional performance testing reports shall contain information addressing each of the building components tested, the testing methods utilized, and include any readings and adjustments made.

5.410.2.5 Documentation and training. [N] A Systems Manual and Systems Operations Training are required, including Occupational Safety and Health Act (OSHA) requirements in *California Code of Regulations* (CCR), Title 8, Section 5142, and other related regulations.

5.410.2.5.1 Systems manual. [N] Documentation of the operational aspects of the building shall be completed within the systems manual and delivered to the building owner or representative. The systems manual shall include the following:
1. Site information, including facility description, history and current requirements.
2. Site contact information.
3. Basic operations and maintenance, including general site operating procedures, basic troubleshooting, recommended maintenance requirements, site events log.
4. Major systems.
5. Site equipment inventory and maintenance notes.
6. A copy of verifications required by the enforcing agency or this code.
7. Other resources and documentation, if applicable.

5.410.2.5.2 Systems operations training. [N] A program for training of the appropriate maintenance staff for each equipment type and/or system shall be developed and documented in the commissioning report and shall include the following:
1. System/equipment overview (what it is, what it does and with what other systems and/or equipment it interfaces).
2. Review and demonstration of servicing/preventive maintenance.
3. Review of the information in the Systems Manual.
4. Review of the record drawings on the system/equipment.

5.410.2.6 Commissioning report. [N] A report of commissioning process activities undertaken through the design and construction phases of the building project shall be completed and provided to the owner or representative.

☐ CONTRACTOR TO FULFILL THIS REQUIREMENT ON SITE DURING CONSTRUCTION.

5.410.4 TESTING AND ADJUSTING. New buildings less than 10,000 square feet. Testing and adjusting of systems shall be required for new buildings less than 10,000 square feet or new systems to serve an addition or alteration subject to Section 303.1.

5.410.4.2 (Reserved)

Note: For energy-related systems under the scope (Section 100) of the California Energy Code, including heating, ventilation, air conditioning (HVAC) systems and controls, indoor lighting system and controls, as well as water heating systems and controls, refer to California Energy Code Section 120.8 for commissioning requirements and Sections 120.5, 120.6, 130.4, and 140.9(b)3 for additional testing requirements of specific systems.

5.410.4.2 Systems. Develop a written plan of procedures for testing and adjusting systems. Systems to be included for testing and adjusting shall include at a minimum, as applicable to the project:

1. Renewable energy systems.
2. Landscape irrigation systems.
3. Water reuse systems.

5.410.4.3 Procedures. Perform testing and adjusting procedures in accordance with manufacturer's specifications and applicable standards on each system.

5.410.4.3.1 HVAC balancing. In addition to testing and adjusting, before a new space-conditioning system serving a building or space is operated for normal use, the system shall be balanced in accordance with the procedures defined by the Testing Adjusting and Balancing Bureau National Standards; the National Environmental Balancing Bureau Procedural Standards; Associated Air Balance Council National Standards or as approved by the enforcing agency.

5.410.4.4 Reporting. After completion of testing, adjusting and balancing, provide a final report of testing signed by the individual responsible for performing these services.

5.410.4.5 Operation and maintenance (O & M) manual. Provide the building owner or representative with detailed operating and maintenance instructions and copies of guaranties/warranties for each system. O & M instructions shall be consistent with OSHA requirements in CCR, Title 8, Section 5142, and other related regulations.

5.410.4.5.1 Inspections and reports. Include a copy of all inspection verifications and reports required by the enforcing agency.

DIVISION 5.5 ENVIRONMENTAL QUALITY

SECTION 5.501 GENERAL

5.501.1 SCOPE. The provisions of this chapter shall outline means of reducing the quantity of air contaminants that are odorous, irritating, and/or harmful to the comfort and well-being of a building's installers, occupants and neighbors.

MANDATORY

SECTION 5.502 DEFINITIONS

5.502.1 DEFINITIONS. The following terms are defined in Chapter 2 *(and are included here for reference)*

ARTERIAL HIGHWAY. A general term denoting a highway primarily for through traffic usually on a continuous route.

A-WEIGHTED SOUND LEVEL (dBA). The sound pressure level in decibels as measured on a sound level meter using the internationally standardized A-weighting filter or as computed from sound spectral data to which A-weighting adjustments have been made.

1 BTU/HOUR. British thermal units per hour, also referred to as Btu. The amount of heat required to raise one pound of water one degree Fahrenheit per hour, a common measure of heat transfer rate. A ton of refrigeration is 12,000 Btu, the amount of heat required to melt a ton (2,000 pounds) of ice at 32^{0} Fahrenheit.

COMMUNITY NOISE EQUIVALENT LEVEL (CNEL). A metric similar to the day-night average sound level (Ldn), except that a 5 decibel adjustment is added to the equivalent continuous sound exposure level for evening hours (7pm to 10pm) in addition to the 10 dB nighttime adjustment used in the Ldn.

COMPOSITE WOOD PRODUCTS. Composite wood products include hardwood plywood, particleboard and medium density fiberboard. "Composite wood products" does not include hardboard, structural plywood, structural panels, structural composite lumber, oriented strand board, glued laminated timber, timber, prefabricated wood I-joists or finger-jointed lumber, all as specified in California Code of Regulations (CCR), Title 17, Section 93120.1(a).

Note: See CCR, Title 17, Section 93120.1.

DAY-NIGHT AVERAGE SOUND LEVEL (Ldn). The A-weighted equivalent continuous sound exposure level for a 24-hour period with a 10 dB adjustment added to sound levels occurring during nighttime hours (10p.m. to 7 a.m.).

DECIBEL (db). A measure on a logarithmic scale of the magnitude of a particular quantity (such as sound pressure, sound power, sound intensity) with respect to a reference quantity.

ELECTRIC VEHICLE (EV). An automotive-type vehicle for on-road use, such as passenger automobiles, buses, trucks, vans, neighborhood electric vehicles, electric motorcycles, and the like, primarily powered by an electric motor that draws current from a rechargeable storage battery, fuel cell, photovoltaic array, or other source of electric current. Plug-in hybrid electric vehicles (PHEV) are considered electric vehicles. For purposes of the *California Electrical Code*, off-road, self-propoelled electric vehicles, such as industrial trucks, hoists, lifts, transports, golf carts, airline ground support equipment, tractors, boats, and the like, are not included.

ELECTRIC VEHICLE CHARGING STATION(S) (EVCSj). One or more spaces intended for charging electric vehicles.

ELECTRIC VEHICLE SUPPLY EQUIPMENT (EVSE). The conductors, including the ungrounded, grounded, and equipment grounding conductors and the electric vehicle connectors, attachment plugs, and all other fittings, devices, power outlets, or apparatus installed specifically for the purpose of transferring energy between the premises wiring and the electric vehicle.

ENERGY EQUIVALENT (NOISE) LEVEL (Leq). The level of a steady noise which would have the same energy as the fluctuating noise level integrated over the time of period of interest.

EXPRESSWAY. An arterial highway for through traffic which may have partial control of access, but which may or may not be divided or have grade separations at intersections.

FREEWAY. A divided arterial highway with full control of access and with grade separations at intersections.

GLOBAL WARMING POTENTIAL (GWP). The radiative forcing impact of one mass-based unit of a given greenhouse gas relative to an equivalent unit of carbon dioxide over a given period of time. Carbon dioxide is the reference compound with a GWP of one.

GLOBAL WARMING POTENTIAL VALUE (GWP VALUE). A 100-year GWP value published by the Intergovernmental Panel on Climate Change (IPCC) in either its Second Assessment Report (SAR) (IPCC, 1995); or its Fourth Assessment A-3 Report (AR4) (IPCC, 2007). The SAR GWP values are found in column "SAR (100-yr)" of Table 2.14.; the AR4 GWP values are found in column "100 yr" of Table 2.14.

HIGH-GWP REFRIGERANT. A compound used as a heat transfer fluid or gas that is: (a) a chlorofluorocarbon, a hdrochlorofluorocarbon, a hydrofluorocarbon, a perfluorocarbon, or any compound or blend of compounds, with a GWP value equal to or greater than 150, or (B) any ozone depleting substance as defined in Title 40 of the Code of Federal Regulations, Part 82, sec.82.3 (as amended March 10, 2009).

LONG RADIUS ELBOW. Pipe fitting installed between two lengths of pipe or tubing to allow a change of direction, with a radius 1.5 times the pipe diameter.

LOW-GWP REFRIGERANT. A compound used as a heat transfer fluid or gas that: (A) has a GWP value less than 150, and (B) is not an ozone depleting substance as defined in Title 40 of the Code of Federal Regulations, Part 82, sec.82.3 (as amended March 10, 2009).

MERV. Filter minimum efficiency reporting value, based on ASHRAE 52.2-1999.

MAXIMUM INCREMENTAL REACTIVITY (MIR). The maximum change in weight of ozone formed by adding a compound to the "Base REactive Organic Gas (ROG) Mixture" per weight of compound added, expressed to hundreths of a gram (g O^{3}/g ROC).

PRODUCT-WEIGHTED MIR (PWMIR). The sum of all weighted-MIR for all ingredients in a product subject to this article. The PWMIR is the total product reactivity expressed to hundredths of a gram of ozone formed per gram of product (excluding container and packaging).

PSIG. Pounds per square inch, guage.

REACTIVE ORGANIC COMPOUND (ROC). Any compound that has the potential, once emitted, to contribute to ozone formation in the troposphere.

SCHRADER ACCESS VALVES. Access fittings with a valve core installed.

SHORT RADIUS ELBOW. Pipe fitting installed between two lengths of pipe or tubing to allow a change of direction, with a radius 1.0 times the pipe diameter.

SUPERMARKET. For the purposes of Section 5.508.2, a supermarket is any retail food facility with 8,000 square feet or more conditioned area, and that utilizes either refrigerated display cases, or walk-in coolers or freezers connected to remote compressor units or condensing units.
VOC. A volatile organic compound broadly defined as a chemical compound based on carbon chains or rings with vapor pressures greater than 0.1 millimeters of mercury at room temperature. These compounds typically contain hydrogen and may contain oxygen, nitrogen and other elements. See CCR Title 17, Section 94508(a)

Note: Where specific regulations are cited from different agencies such as SCAQMD, ARB, etc., the VOC definition included in that specific regulation is the one that prevails for the specific measure in question.

N/A — NO FIREPLACES OR WOOD STOVES

SECTION 5.503 FIREPLACES

5.503.1 FIREPLACES. Install only a direct-vent sealed-combustion gas or sealed wood-burning fireplace, or a sealed woodstove or pellet stove, and refer to residential requirements in the California Energy Code, Title 24, Part 6, Subchapter 7, Section 150. Woodstoves, pellet stoves and fireplaces shall comply with applicable local ordinances.

5.503.1.1 Woodstoves. Woodstoves and pellet stoves shall comply with U.S. EPA New Source Performance Standards (NSPS) emission limits as applicable, and shall have a permanent label indicating they are certified to meet the emission limits.

N/A — HVAC SYSTEM NOT TO BE USED DURING CONSTRUCTION

SECTION 5.504 POLLUTANT CONTROL

5.504.1 TEMPORARY VENTILATION. The permanent HVAC system shall only be used during construction if necessary to condition the building or areas of addition or alteration within the required temperature range for material and equipment installation. If the HVAC system is used during construction, use return air filters with a Minimum Efficiency Reporting Value (MERV) of 8, based on ASHRAE 52.2-1999, or an average efficiency of 30% based on ASHRAE 52.1-1992 Replace all filters immediately prior to occupancy, or, if the building is occupied during alteration, at the conclusion of construction.

5.504.3 Covering of duct openings and protection of mechanical equipment during construction. At the time of rough installation and during storage on the construction site until final startup of the heating, cooling and ventilation equipment, all duct and other related air distribution component openings shall be covered with tape, plastic, sheet metal or other methods acceptable to the enforcing agency to reduce the amount of dust, water and debris which may enter the system.

Copyright © 2025

All ideas, designs, arrangements and plans indicated or represented by this drawing are owned by, and the property of, NICHOLS, MELBURG and ROSSETTO and were created, evolved and developed for use on, and in conjunction with, the specified project. None of such ideas, designs, arrangements or plans shall be used by, or disclosed to any person, firm or corporation for any purpose whatsoever without the written permission of NICHOLS, MELBURG and ROSSETTO.

NICHOLS MELBURG ROSSETTO
ARCHITECTS + ENGINEERS
300 KNOLLCREST DRIVE
REDDING, CA. 96002
(530) 222-3300 (530) 222-3538 FAX
http://www.nmrdesign.com

CONSULTANTS

LICENSE STAMPS

LICENSED ARCHITECT — KYLE MATTI — C 27504 — REN. 10/31/25 — STATE OF CALIFORNIA

PROJECT NAME

TEHAMA COUNTY CORNING VETERAN'S HALL

1620 SOLANO ST.
CORNING, CA

SHEET TITLE

CALGREEN CHECKLIST

DRAWING STATUS

CONSTRUCTION DOCUMENTS

REVISIONS

Sym.	Description	Date

Drawn By	KP
Date Issued	2/13/2025
Scale	N.T.S.
Project No.	21-6497

SHEET No.

G011

Login Name: KarenP
Plot Date: February 13, 2025 - 8:21 am
File Name: N:\Projects\6000.Civic\2021\21-6497 Tehama Co. Corning Vets Hall\Drawings\CVH-CalGreen.dwg
XREFS: x-CVH_Title Block

2022 CALIFORNIA GREEN BUILDING STANDARDS CODE NONRESIDENTIAL MANDATORY MEASURES

MANDATORY

X

5.504.4 FINISH MATERIAL POLLUTANT CONTROL. Finish materials shall comply with Sections 5.504.4.1 through 5.504.4.6.

5.504.4.1 Adhesives, sealants and caulks. Adhesives, sealants, and caulks used on the project shall meet the requirements of the following standards:

1. Adhesives, adhesive bonding primers, adhesive primers, sealants, sealant primers and caulks shall comply with local or regional air pollution control or air quality management district rules where applicable, or SCAQMD Rule 1168 VOC limits, as shown in Tables 5.504.4.1 and 5.504.4.2. Such products also shall comply with the Rule 1168 prohibition on the use of certain toxic compounds (chloroform, ethylene dichloride, methylene chloride, perchloroethylene and trichloroethylene), except for aerosol products as specified in subsection 2, below.

2. Aerosol adhesives, and smaller unit sizes of adhesives, and sealant or caulking compounds (in units of product, less packaging, which do not weigh more than one pound and do not consist of more than 16 fluid ounces) shall comply with statewide VOC standards and other requirements, including prohibitions on use of certain toxic compounds, of *California Code of Regulations*, Title 17, commencing with Section 94507.

TABLE 5.504.4.1 - ADHESIVE VOC LIMIT[1,2]

Less Water and Less Exempt Compounds in Grams per Liter

ARCHITECTURAL APPLICATIONS	CURRENT VOC LIMIT
INDOOR CARPET ADHESIVES	50
CARPET PAD ADHESIVES	50
OUTDOOR CARPET ADHESIVES	150
WOOD FLOORING ADHESIVES	100
RUBBER FLOOR ADHESIVES	60
SUBFLOOR ADHESIVES	50
CERAMIC TILE ADHESIVES	65
VCT & ASPHALT TILE ADHESIVES	50
DRYWALL & PANEL ADHESIVES	50
COVE BASE ADHESIVES	50
MULTIPURPOSE CONSTRUCTION ADHESIVES	70
STRUCTURAL GLAZING ADHESIVES	100
SINGLE-PLY ROOF MEMBRANE ADHESIVES	250
OTHER ADHESIVES NOT SPECIFICALLY LISTED	50
SPECIALTY APPLICATIONS	
PVC WELDING	510
CPVC WELDING	490
ABS WELDING	325
PLASTIC CEMENT WELDING	250
ADHESIVE PRIMER FOR PLASTIC	550
CONTACT ADHESIVE	80
SPECIAL PURPOSE CONTACT ADHESIVE	250
STRUCTURAL WOOD MEMBER ADHESIVE	140
TOP & TRIM ADHESIVE	250
SUBSTRATE SPECIFIC APPLICATIONS	
METAL TO METAL	30
PLASTIC FOAMS	50
POROUS MATERIAL (EXCEPT WOOD)	50
WOOD	30
FIBERGLASS	80

1. IF AN ADHESIVE IS USED TO BOND DISSIMILAR SUBSTRATES TOGETHER, THE ADHESIVE WITH THE HIGHEST VOC CONTENT SHALL BE ALLOWED.

2. FOR ADDITIONAL INFORMATION REGARDING METHODS TO MEASURE THE VOC CONTENT SPECIFIED IN THIS TABLE, SEE SOUTH COAST AIR QUALITY MANAGEMENT DISTRICT RULE 1168, www.arb.ca.gov/DRDB/SC/CURHTML/R1168.PDF

TABLE 5.504.4.2 - SEALANT VOC LIMIT

Less Water and Less Exempt Compounds in Grams per Liter

SEALANTS	CURRENT VOC LIMIT
ARCHITECTURAL	250
MARINE DECK	760
NONMEMBRANE ROOF	300
ROADWAY	250
SINGLE-PLY ROOF MEMBRANE	450
OTHER	420
SEALANT PRIMERS	
ARCHITECTURAL	
NONPOROUS	250
POROUS	775
MODIFIED BITUMINOUS	500
MARINE DECK	760
OTHER	750

NOTE: FOR ADDITIONAL INFORMATION REGARDING METHODS TO MEASURE THE VOC CONTENT SPECIFIED IN THESE TABLES, SEE SOUTH COAST AIR QUALITY MANAGEMENT DISTRICT RULE 1168.

X

5.504.4.3 Paints and coatings. Architectural paints and coatings shall comply with VOC limits in Table 1 of the ARB Architectural Coatings Suggested Control Measure, as shown in Table 5.504.4.3, unless more stringent local limits apply. The VOC content limit for coatings that do not meet the definitions for the specialty coatings categories listed in Table 5.504.4.3 shall be determined by classifying the coating as a Flat, Nonflat or Nonflat-High Gloss coating, based on its gloss, as defined in Subsections 4.21, 4.36 and 4.37 of the 2007 California Air Resources Board Suggested Control Measure, and the corresponding Flat, Nonflat or Nonflat-High Gloss VOC limit in Table 5.504.4.3 shall apply.

5.504.4.3.1 Aerosol Paints and coatings. Aerosol paints and coatings shall meet the PWMIR Limits for ROC in Section 94522(a)(3) and other requirements, including prohibitions on use of certain toxic compounds and ozone depleting substances, in Sections 94522(c)(2) and (d)(2) of *California Code of Regulations*, Title 17, commencing with Section 94520; and in areas under the jurisdiction of the Bay Area Air Quality Management District additionally comply with the percent VOC by weight of product limits of Regulation 8 Rule 49.

TABLE 5.504.4.3 - VOC CONTENT LIMITS FOR ARCHITECTURAL COATINGS[2,3]

GRAMS OF VOC PER LITER OF COATING, LESS WATER & LESS EXEMPT COMPOUNDS

COATING CATEGORY	CURRENT VOC LIMIT
FLAT COATINGS	50
NONFLAT COATINGS	100
NONFLAT HIGH GLOSS COATINGS	150

MANDATORY

TABLE 5.504.4.3 - CONT.

GRAMS OF VOC PER LITER OF COATING, LESS WATER & LESS EXEMPT COMPOUNDS

COATING CATEGORY	CURRENT VOC LIMIT
SPECIALTY COATINGS	
ALUMINUM ROOF COATINGS	400
BASEMENT SPECIALTY COATINGS	400
BITUMINOUS ROOF COATINGS	50
BITUMINOUS ROOF PRIMERS	350
BOND BREAKERS	350
CONCRETE CURING COMPOUNDS	350
CONCRETE/MASONRY SEALERS	100
DRIVEWAY SEALERS	50
DRY FOG COATINGS	150
FAUX FINISHING COATINGS	350
FIRE RESISTIVE COATINGS	350
FLOOR COATINGS	100
FORM-RELEASE COMPOUNDS	250
GRAPHIC ARTS COATINGS (SIGN PAINTS)	500
HIGH-TEMPERATURE COATINGS	420
INDUSTRIAL MAINTENANCE COATINGS	250
LOW SOLIDS COATINGS[1]	120
MAGNESITE CEMENT COATINGS	450
MASTIC TEXTURE COATINGS	100
METALLIC PIGMENTED COATINGS	500
MULTICOLOR COATINGS	250
PRETREATMENT WASH PRIMERS	420
PRIMERS, SEALERS, & UNDERCOATERS	100
REACTIVE PENETRATING SEALERS	350
RECYCLED COATINGS	250
ROOF COATINGS	50
RUST PREVENTATIVE COATINGS	250
SHELLACS:	
CLEAR	730
OPAQUE	550
SPECIALTY PRIMERS, SEALERS & UNDERCOATERS	100
STAINS	250
STONE CONSOLIDANTS	450
SWIMMING POOL COATINGS	340
TRAFFIC MARKING COATINGS	100
TUB & TILE REFINISH COATINGS	420
WATERPROOFING MEMBRANES	250
WOOD COATINGS	275
WOOD PRESERVATIVES	350
ZINC-RICH PRIMERS	340

1. GRAMS OF VOC PER LITER OF COATING, INCLUDING WATER & EXEMPT COMPOUNDS

2. THE SPECIFIED LIMITS REMAIN IN EFFECT UNLESS REVISED LIMITS ARE LISTED IN SUBSEQUENT COLUMNS IN THE TABLE.

3. VALUES IN THIS TABLE ARE DERIVED FROM THOSE SPECIFIED BY THE CALIFORNIA AIR RESOURCES BOARD, ARCHITECTURAL COATINGS SUGGESTED CONTROL MEASURE, FEB. 1, 2008. MORE INFORMATION IS AVAILABLE FROM THE AIR RESOURCES BOARD.

5.504.4.3.2 Verification. Verification of compliance with this section shall be provided at the request of the enforcing agency. Documentation may include, but is not limited to, the following:
1. Manufacturer's product specification
2. Field verification of on-site product containers

N/A
NO CARPET SYSTEMS

5.504.4.4 Carpet Systems.
All carpet installed in the building interior shall meet the requirements of the California Department of Public Health, "Standard Method for the Testing and Evaluation of Volatile Organic Chemical Emissions from Indoor Sources Using Environmental Chambers." Version 1.2, January 2017 (Emission testing method for California Specifications 01350).

See California Department of Public Health's website for certification programs and testing labs.
https://www.cdph.ca.gov/Programs/CCDPHP/DEODC/EHLB/IAQ/Pages/VOC.aspx#material

5.504.4.4.1 Carpet cushion. All carpet cushion installed in the building interior shall meet the requirements of the California Department of Public Health,"Standard Method for the Testing and Evaluation of Volatile Organic Chemical Emissions from Indoor Sources Using Environmental Chambers,"Version 1.2, January 2017 (Emission testing method for California Specifications 01350).

See California Department of Public Health's website for certification programs and testing labs.
https://www.cdph.ca.gov/Programs/CCDPHP/DEODC/EHLB/IAQ/Pages/VOC.aspx#material

5.504.4.4.2 Carpet adhesive. All carpet adhesive shall meet the requirements of Table 5.504.4.1.

X

5.504.4.5 Composite wood products. Hardwood plywood, particleboard and medium density fiberboard composite wood products used on the interior or exterior of the buildings shall meet the requirements for formaldehyde as specified in ARB's Air Toxics Control Measure (ATCM) for Composite Wood (17 CCR 93120 et seq.). Those materials not exempted under the ATCM must meet the specified emission limits, as shown in Table 5.504.4.5.

5.504.4.5.3 Documentation. Verification of compliance with this section shall be provided as requested by the enforcing agency. Documentation shall include at least one of the following:
1. Product certifications and specifications.
2. Chain of custody certifications.
3. Product labeled and invoiced as meeting the Composite Wood Products regulation (see CR, Title 17, Section 93120, et seq.).
4. Exterior grade products marked as meeting the PS-1 or PS-2 standards of the Engineered Wood Association, the Australian AS/NZS 2269 or European 636 3S standards.
5. Other methods acceptable to the enforcing agency.

TABLE 5.504.4.5 - FORMALDEHYDE LIMITS[1]

MAXIMUM FORMALDEHYDE EMISSIONS IN PARTS PER MILLION

PRODUCT	CURRENT LIMIT
HARDWOOD PLYWOOD VENEER CORE	0.05
HARDWOOD PLYWOOD COMPOSITE CORE	0.05
PARTICLE BOARD	0.09
MEDIUM DENSITY FIBERBOARD	0.11
THIN MEDIUM DENSITY FIBERBOARD[2]	0.13

1. VALUES IN THIS TABLE ARE DERIVED FROM THOSE SPECIFIED BY THE CALIFORNIA AIR RESOURCES BOARD, AIR TOXICS CONTROL MEASURE FOR COMPOSITE WOOD AS TESTED IN ACCORDANCE WITH ASTM E 1333. FOR ADDITIONAL INFORMATION, SEE CALIFORNIA CODE OF REGULATIONS, TITLE 17, SECTIONS 93120 THROUGH 93120.12.

2. THIN MEDIUM DENSITY FIBERBOARD HAS A MAXIMUM THICKNESS OF 5/16 INCHES (8 MM).

MANDATORY

X

5.504.4.6 Resilient flooring systems. Where resilient flooring is installed, at least 80 percent of floor area receiving resilient flooring shall meet the requirements of the California Department of Public Health,"Standard Method for the Testing and Evaluation of Volatile Organic Chemical Emissions from Indoor Sources Using Environmental Chambers," Version 1.2, January 2017 (Emission testing method for California Specifications 01350)

See California Department of Public Health's website for certification programs and testing labs.
https://www.cdph.ca.gov/Programs/CCDPHP/DEODC/EHLB/IAQ/Pages/VOC.aspx#material

5.504.4.6.1 Verification of compliance. Documentation shall be provided verifying that resilient flooring materials meet the pollutant emission limits.

N/A
DOES NOT APPLY

5.504.4.7 Thermal insulation
Comply with the requirements of the California Department of Public Health, "Standard Method of the Testing and Evaluation of Volatile Organic Chemical Emissions from Indoor Sources Using Environmental Chambers, "Version 1.2, January 1.2, January 2017 (Emission testing method for California Specification 01350). See California Department of Public Health's website for certification programs and testing labs.
https://www.cdph.ca.gov/Programs/CCDPHP/DEODC/EHLB/IAQ/Pages/VOC.aspx#material

5.504.4.7.1 Verification of compliance.
Documentation shall be provided verifying that thermal insulation materials meet the pollutant emission limits.

X

5.504.4.8 Acoustical ceiling and wall panels.
Comply with the requirements of the California Department of Public Health, "Standard Method for the Testing and Evaluation of Volatile Organic Chemical Emissions from Indoor Sources Using Environmental Chambers, " Version 1.2, January 2017 (Emission testing method for California Specification 01350). See California Department of Public Health's website for certification programs and testing labs.

5.504.4.8.1 Verification of compliance. Documentation shall be provided verifying that acoustical finish materials meet the pollutant emission limits.

X
SEE MECHANICAL DRAWINGS

5.504.5.3 Filters. In mechanically ventilated buildings, provide regularly occupied areas of the building with air filtration media for outside and return air that provides at least a Minimum Efficiency Reporting Value (MERV) of 13. MERV 13 filters shall be installed prior to occupancy, and recommendations for maintenance with filters of the same value shall be included in the operation and maintenance manual.

Exceptions: Existing mechanical equipment.

5.504.5.3.1 Labeling. Installed filters shall be clearly labeled by the manufacturer indicating the MERV rating.

X
SEE MECHANICAL DRAWINGS

5.504.7 ENVIRONMENTAL TOBACCO SMOKE (ETS) CONTROL. Where outdoor areas are provided for smoking, prohibit smoking within 25 feet of building entries, outdoor air intakes and operable windows and within the building as already prohibited by other laws or regulations; or as enforced by ordinances, regulations or policies of any city, county, city and county, California Community College, campus of the California State University, or campus of the University of California, whichever are more stringent. When ordinances, regulations or policies are not in place, post signage to inform building occupants of the prohibitions.

X
SEE MECHANICAL DRAWINGS

SECTION 5.505 INDOOR MOISTURE CONTROL

5.505.1 INDOOR MOISTURE CONTROL. Buildings shall meet or exceed the provisions of California Building Code, CCR, Title 24, Part 2, Sections 1202 (Ventilation) and Chapter 14 (Exterior Walls). For additional measures, see Section 5.407.2 of this code.

X
SEE MECHANICAL DRAWINGS

SECTION 5.506 INDOOR AIR QUALITY

5.506.1 OUTSIDE AIR DELIVERY. For mechanically or naturally ventilated spaces in buildings, meet the minimum requirements of Section 120.1 (Requirements For Ventilation) of the *California Energy Code*, or the applicable local code, whichever is more stringent, and Division 1, Chapter 4 of CCR, Title 8.

5.506.2 CARBON DIOXIDE (CO_2) MONITORING. For buildings or additions equipped with demand control ventilation, CO_2 sensors and ventilation controls shall be specified and installed in accordance with the requirements of the California Energy Code, Section 120(c)(4).

N/A
DOES NOT APPLY

5.506.3 Carbon dioxide (CO2) monitoring in classrooms.
(DSA-SS) Each public K-12 school classroom, as listed in Table 120.1-A of the *California Energy Code*, shall be equipped with a carbon dioxide monitor or sensor that meets the following requirements:
1. The monitor or sensor shall be permanently affixed in a tamper-proof manner in each classroom between 3 and 6 feet (914 mm and 1829 mm) above the floor and at least 5 feet (1524 mm) away from door and operable windows.
2. When the monitor or sensor is not integral to an Energy Management Control System (EMCS), the monitor or sensor shall display the carbon dioxide readings on the device. When the sensor is integral to an EMCS, the carbon dioxide readings shall be available to and regularly monitored by facility personnel.
3. A monitor shall provide notification though a visual indicator on the monitor when the carbon dioxide levels in the classroom have exceeded 1,100ppm. A sensor integral to an EMCS shall provide notification to facility personnel through a visual and/or audible indicator when the carbon dioxide levels in the classroom have exceeded 1,100ppm.
4. The monitor or sensor shall measure carbon dioxide levels at minimum 15- minute intervals and shall maintain a record of previous carbon dioxide measurements of not less than 30 days duration.
5. The monitor or sensor used to measure carbon dioxide levels shall have the capacity to measure carbon dioxide levels with a range of 400ppm to 2000ppm or greater.
6. The monitor or sensor shall be certified by the manufacturer to be accurate within 75ppm at 1,000ppm carbon dioxide concentration and shall be certified by the manufacturer to require calibration no more frequently than once every 5 years.

N/A
DOES NOT APPLY

SECTION 5.507 ENVIRONMENTAL COMFORT

5.507.4 ACOUSTICAL CONTROL. Employ building assemblies and components with Sound Transmission Class (STC) values determined in accordance with ASTM E 90 and ASTM E 413, or Outdoor-Indoor Sound Transmission Class (OITC) determined in accordance with ASTM E 1332, using either the prescriptive or performance method in Section 5.507.4.1 or 5.507.4.2.

Exception: Buildings with few or no occupants or where occupants are not likely to be affected by exterior noise, as determined by the enforcement authority, such as factories, stadiums, storage, enclosed parking structures and utility buildings.

Exception: [DSA-SS] For public schools and community colleges, the requirements of this section and all subsections apply only to new construction.

5.507.4.1 Exterior noise transmission, prescriptive method. Wall and roof-ceiling assemblies exposed to the noise source making up the building or addition envelope or altered envelope shall meet a composite STC rating of at least 50 or a composite OITC rating of no less than 40, with exterior windows of a minimum STC of 40 or OITC of 30 in the following locations:

1. Within the 65 CNEL noise contour of an airport.

Exceptions:

1. L_{dn} or CNEL for military airports shall be determined by the facility Air Installation Compatible Land Use Zone (AICUZ) plan.
2. L_{dn} or CNEL for other airports and heliports for which a land use plan has not been developed shall be determined by the local general plan noise element.

2. Within the 65 CNEL or L_{dn} noise contour of a freeway or expressway, railroad, industrial source or fixed-guideway source as determined by the Noise Element of the General Plan.

5.507.4.1.1. Noise exposure where noise contours are not readily available. Buildings exposed to a noise level of 65 dB L_{eq} - 1-hr during any hour of operation shall have building, addition or alteration exterior wall and roof-ceiling assemblies exposed to the noise source meeting a composite STC rating of at least 45 (or OITC 35), with exterior windows of a minimum STC of 40 (or OITC 30).

5.507.4.2 Performance Method. For buildings located as defined in Section 5.507.4.1 or 5.507.4.1.1, wall and roof-ceiling assemblies exposed to the noise source making up the building or addition envelope or altered envelope shall be constructed to provide an interior noise environment attributable to exterior sources that does not exceed an hourly equivalent noise level (Leq-1Hr) of 50 dBA in occupied areas during any hour of operation.

5.507.4.2.1 Site Features. Exterior features such as sound walls or earth berms may be utilized as appropriate to the building, addition or alteration project to mitigate sound migration to the interior.

5.507.4.2.2 Documentation of Compliance. An acoustical analysis documenting complying interior sound levels shall be prepared by personnel approved by the architect or engineer of record.

5.507.4.3 Interior sound transmission. Wall and floor-ceiling assemblies separating tenant spaces and tenant spaces and public places shall have an STC of at least 40.

Note: Examples of assemblies and their various STC ratings may be found at the California Office of Noise Control: www.toolbase.org/PDF/CaseStudies/stc_icc_ratings.pdf.

X
SEE MECHANICAL DRAWINGS

SECTION 5.508 OUTDOOR AIR QUALITY

5.508.1 Ozone depletion and greenhouse gas reductions. Installations of HVAC, refrigeration and fire suppression equipment shall comply with Sections 5.508.1.1 and 5.508.1.2.

5.508.1.1 Chlorofluorocarbons (CFCs). Install HVAC, refrigeration and fire suppression equipment that do not contain CFCs.

5.508.1.2 Halons. Install HVAC, refrigeration and fire suppression equipment that do not contain Halons.

MANDATORY

N/A
PROJECT DOES NOT FALL UNDER THIS CATEGORY

5.508.2 Supermarket refrigerant leak reduction. New commercial refrigeration systems shall comply with the provisions of this section when installed in retail food stores 8,000 square feet or more conditioned area, and that utilize either refrigerated display cases, or walk-in coolers or freezers connected to remote compressor units or condensing units. The leak reduction measures apply to refrigeration systems containing high-global-warming potential (high-GWP) refrigerants with a GWP of 150 or greater. New refrigeration systems include both new facilities and the replacement of existing refrigeration systems in existing facilities.

Exception: Refrigeration systems containing low-global warming potential (low-GWP) refrigerant with a GWP value less than 150 are not subject to this section. Low-GWP refrigerants are nonozone-depleting refrigerants that include ammonia, carbon dioxide (CO_2), and potentially other refrigerants.

5.508.2.1 Refrigerant piping. Piping compliant with the California Mechanical Code shall be installed to be accessible for leak protection and repairs. Piping runs using threaded pipe, copper tubing with an outside diameter (OD) less than 1/4 inch, flared tubing connections and short radius elbows shall not be used in refrigerant systems except as noted below.

5.508.2.1.1 Threaded pipe. Threaded connections are permitted at the compressor rack.

5.508.2.1.2 Copper pipe. Copper tubing with an OD less than 1/4 inch may be used in systems with a refrigerant charge of 5 pounds or less.

5.508.2.1.2.1 Anchorage. One-fouth-inch OD tubing shall be securely clamped to a rigid base to keep vibration levels below 8 mils.

5.508.2.1.3 Flared tubing connections. Double-flared tubing connections may be used for pressure controls, valve pilot lines and oil.

Exception: Single-flared tubing connections may be used with a multiring seal coated with industrial sealant suitable for use with refrigerants and tightened in accordance with manufacturer's recommendations.

5.508.2.1.4 Elbows. Short radius elbows are only permitted where space limitations prohibit use of long radius elbows.

5.508.2.2 Valves. Valves Valves and fittings shall comply with the *California Mechanical Code* and as follows.

5.508.2.2.1 Pressure relief valves. For vessels containing high-GWP refrigerant, a rupture disc shall be installed between the outlet of the vessel and the inlet of the pressure relief valve.

5.508.2.2.1.1 Pressure detection. A pressure gauge, pressure transducer or other device shall be installed in the space between the rupture disc and the relief valve inlet to indicate a disc rupture or discharge of the relief valve.

5.508.2.2.2 Access valves. Only Schrader access valves with a brass or steel body are permitted for use.

5.508.2.2.2.1 Valve caps. For systems with a refrigerant charge of 5 pounds or more, valve caps shall be brass or steel and not plastic.

5.508.2.2.2.2 Seal caps. If designed for it, the cap shall have a neoprene O-ring in place.

5.508.2.2.2.2.1 Chain tethers. Chain tethers to fit ovr the stem are required for valves designed to have seal caps.

Exception: Valves with seal caps that are not removed from the valve during stem operation.

5.508.2.3 Refrigerated service cases. Refrigerated service cases holding food products containing vinegar and salt shall have evaporator coils of corrosion-resistant material, such as stainless steel; or be coated to prevent corrosion from these substances.

5.508.2.3.1 Coil coating. Consideration shall be given to the heat transfer efficiency of coil coating to maximize energy efficiency.

5.508.2.4 Refrigerant receivers. Refrigerant receivers with capacities greater than 200 pounds shall be fitted with a device tha indicates the level of refrigerant in the receiver.

5.508.2.5 Pressure testing. The system shall be pressure tested during installation prior to evacuation and charging.

5.508.2.5.1 Minimum pressure. The system shall be charged with regulated dry nitrogen and appropriate tracer gas to bring system pressure up to 300 psig minimum.

5.508.2.5.2 Leaks. Check the system for leaks, repair any leaks, and retest for pressure using the same gauge.

5.508.2.5.3 Allowable pressure change. The system shall stand, unaltered, for 24 hours with no more than a +/- one pound pressure change from 300 psig, measured with the same gauge.

5.508.2.6 Evacuation. The system shall be evacuated after pressure testing and prior to charging.

5.508.2.6.1 First vacuum. Pull a system vacuum down to at least 1000 microns (+/- 50 microns), and hold for 30 minutes.

5.508.2.6.2 Second vacuum. Pull a second system vacuum to a minimum of 500 microns and hold for 30 minutes.

5.508.2.6.3 Third vacuum. Pull a third vacuum down to a minimum of 300 microns, and hold for 24 hours with a maximum drift of 100 microns over a 24-hour period.

CHAPTER 7
INSTALLER & SPECIAL INSPECTOR QUALIFICATIONS

702 QUALIFICATIONS

702.1 INSTALLER TRAINING. HVAC system installers shall be trained and certified in the proper installation of HVAC systems including ducts and equipment by a nationally or regionally recognized training or certification program. Uncertified persons may perform HVAC installations when under the direct supervision and responsibility of a person trained and certified to install HVAC systems or contractor licensed to install HVAC systems. Examples of acceptable HVAC training and certification programs include but are not limited to the following:

1. State certified apprenticeship programs.
2. Public utility training programs.
3. Training programs sponsored by trade, labor or statewide energy consulting or verification organizations.
4. Programs sponsored by manufacturing organizations.
5. Other programs acceptable to the enforcing agency.

702.2 SPECIAL INSPECTION [HCD]. When required by the enforcing agency, the owner or the responsible entity acting as the owner's agent shall employ one or more special inspectors to provide inspection or other duties necessary to substantiate compliance with this code. Special inspectors shall demonstrate competence to the satisfaction of the enforcing agency for the particular type of inspection or task to be performed. In addition to other certifications or qualifications acceptable to the enforcing agency, the following certifications or education may be considered by the enforcing agency when evaluating the qualifications of a special inspector:

1. Certification by a national or regional green building program or standard publisher.
2. Certification by a statewide energy consulting or verification organization, such as HERS raters, building performance contractors, and home energy auditors.
3. Successful completion of a third party apprentice training program in the appropriate trade.
4. Other programs acceptable to the enforcing agency.

Notes:

1. Special inspectors shall be independent entities with no financial interest in the materials or the project they are inspecting for compliance with this code.
2. HERS raters are special inspectors certified by the California Energy Commission (CEC) to rate homes in California according to the Home Energy Rating System (HERS).

[BSC-CG] When required by the enforcing agency, the owner or the responsible entity acting as the owner's agent shall employ one or more special inspectors to provide inspection or other duties necessary to substantiate compliance with this code. Special inspectors shall demonstrate competence to the satisfaction of the enforcing agency for the particular type of inspection or task to be performed. In addition, the special inspector shall have a certification from a recognized state, national or international association, as determined by the local agency. The area of certification shall be closely related to the primary job function, as determined by the local agency.

Note: Special inspectors shall be independent entities with no financial interest in the materials or the project they are inspecting for compliance with this code.

703 VERIFICATIONS

703.1 DOCUMENTATION. Documentation used to show compliance with this code shall include but is not limited to, construction documents, plans, specifications, builder or installer certification, inspection reports, or other methods acceptable to the enforcing agency which demonstrate substantial conformance. When specific documentation or special inspection is necessary to verify compliance, that method of compliance will be specified in the appropriate section or identified applicable checklist.

Copyright © 2025

All ideas, designs, arrangements and plans indicated or represented by this drawing are owned by, and the property of, NICHOLS, MELBURG and ROSSETTO and were created, evolved and developed for use on, and in conjunction with, the specified project. None of such ideas, designs, arrangements or plans shall be used by, or disclosed to any person, firm or corporation for any purpose whatsoever without the written permission of NICHOLS, MELBURG and ROSSETTO.

NICHOLS MELBURG & ROSSETTO
ARCHITECTS + ENGINEERS
300 KNOLLCREST DRIVE
REDDING, CA. 96002
(530) 222-3300 (530) 222-3538 FAX
http://www.nmrdesign.com

CONSULTANTS

LICENSE STAMPS

LICENSED ARCHITECT
KYLE MATTI
C 27504
REN. 10/31/25
STATE OF CALIFORNIA

PROJECT NAME

TEHAMA COUNTY CORNING VETERAN'S HALL

1620 SOLANO ST.
CORNING, CA

SHEET TITLE

CALGREEN CHECKLIST

DRAWING STATUS

CONSTRUCTION DOCUMENTS

REVISIONS

Sym.	Description	Date

Drawn By	KP
Date Issued	2/13/2025
Scale	N.T.S.
Project No.	21-6497

SHEET No.

G012

Login Name: KarenP
Plot Date: February 13, 2025 - 8:21 am
File Name: N:\Projects\6000Civic\2021\21-6497 Tehama Co. Corning Vets Hall\Drawings\CVH-CalGreen.dwg
XREFS: x-CVH_Title Block

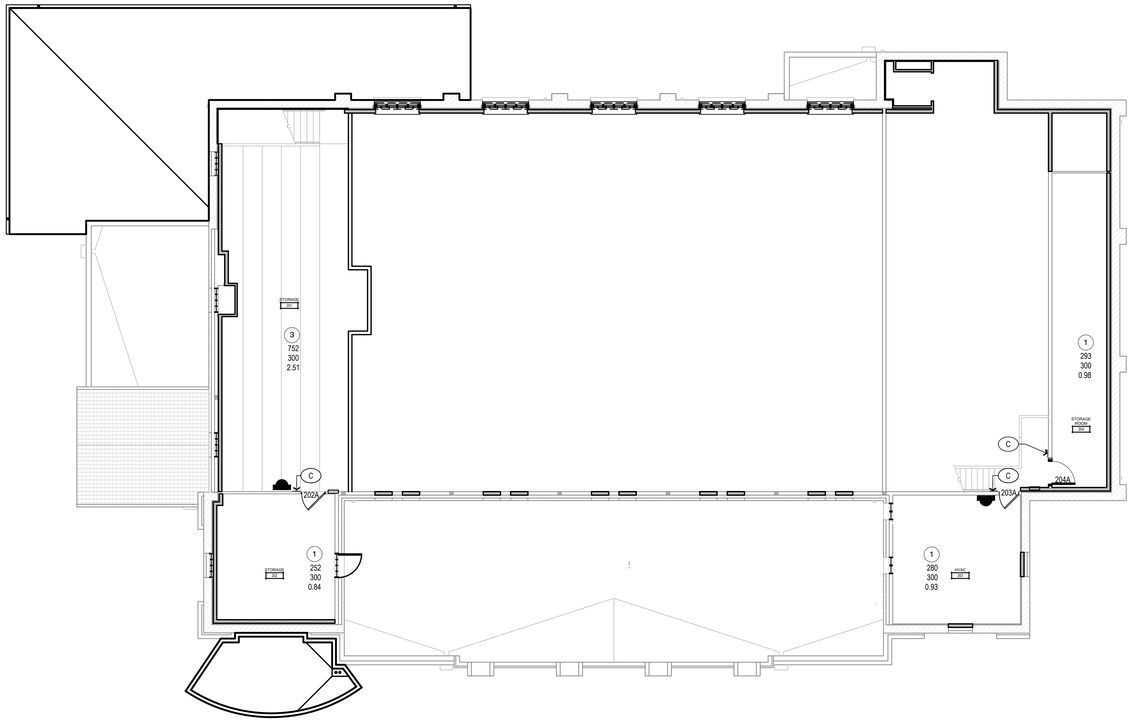

NORTH

SECOND FLOOR PLAN

SCALE: 1/8" = 1'-0"

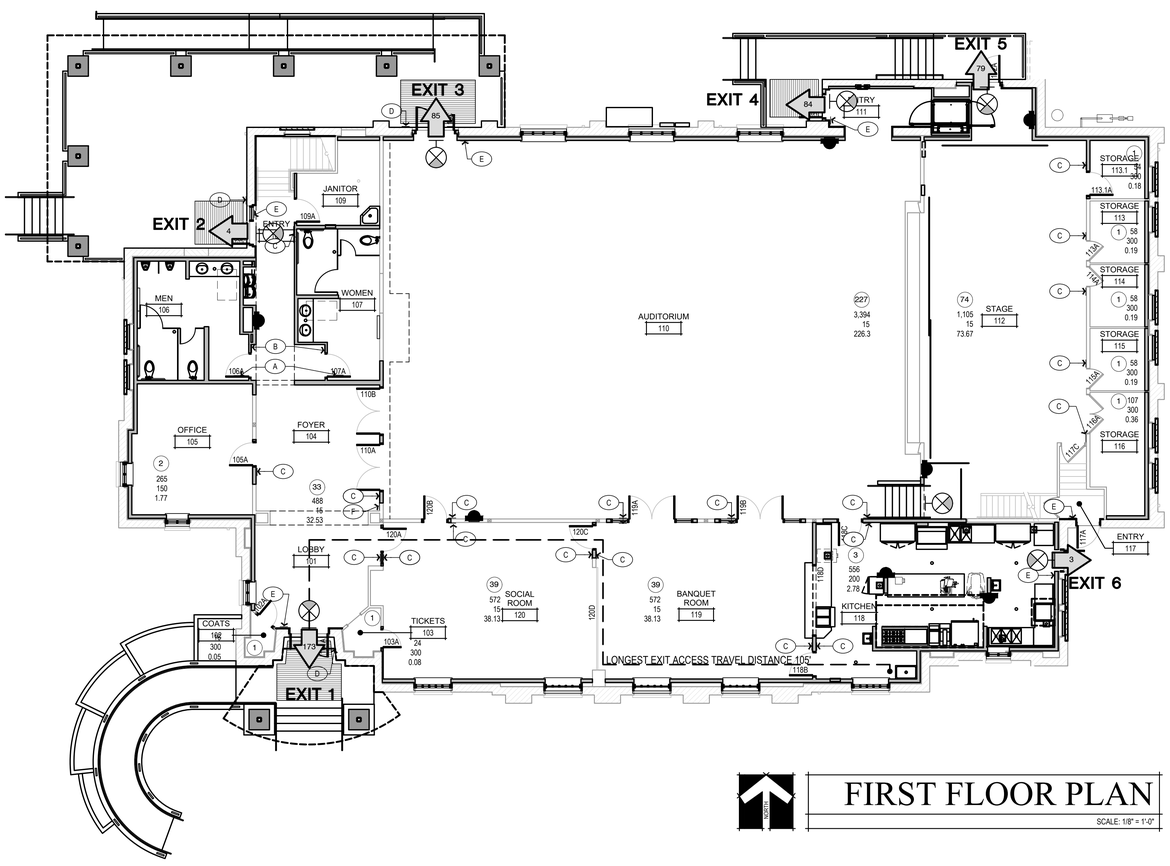

NORTH

FIRST FLOOR PLAN

SCALE: 1/8" = 1'-0"

CODE ANALYSIS

1. BUILDING DATA

OCCUPANCY CLASSIFICATION		A-3
CONSTRUCTION TYPE		V-B (NON-SPRINKLERED)
NUMBER OF STORIES		2 STORIES
BUILDING AREA	FIRST FLOOR:	9,185 SQ. FT.
	SECOND FLOOR:	1,.103 SQ. FT.
	CONDITIONED AREA:	10,288 SQ. FT.
ACTUAL BUILDING HEIGHT		32'

2. ALLOWABLE BUILDING AREA

BASIC ALLOWABLE BUILDING AREA
TYPE V-B NS A-3 = 6,000
(PER CBC TABLE 506.2)

MAXIMUM ALLOWABLE AREA PER STORY
Aa = [At + (NS X If)] X Sa

At = 6,000
If = 100%
NS = 6,000
Sa = 2

Aa = [6,000 + (6,000 X 1)] X 2 = 24,000 SF

ACTUAL AREA OF 1ST FLOOR = 9,158 SF < 24,000 OK

3. MEANS OF EGRESS

OCCUPANT LOAD FACTOR (PER CBC TABLE 1004.5)

ASSEMBLY AREAS	=	15
STORAGE	=	300
OFFICE	=	150
KITCHEN	=	200

MAXIMUM EXIT ACCESS TRAVEL DISTANCE WITHOUT SPRINKLER SYSTEM (PER CBC TABLE 1017.2) A = 200'

MAXIMUM COMMON PATH OF EGRESS TRAVEL DISTANCE WITHOUT SPRINKLER SYSTEM (PER CBC TABLE 1006.2.1) A = 75'

4. EXIT WIDTH

EXIT #	OCCUPANTS	REQ'D WIDTH	PROVIDED	
1	173	34.6"	60"	OK
2	4	0.8"	36"	OK
3	85	17"	60"	OK
4	84	16.8"	36"	OK
5	79	15.8"	42"	OK
6	3	0.6"	32"	OK

LEGEND

ROOM DATA
726 = AREA OF ROOM SQUARE FOOTAGE
7 = OCCUPANT LOAD FACTOR
103.7 = OCCUPANTS IN ROOM

10 # OF OCCUPANTS EXITING AT INDICATED LOCATION

24 # OF ROOM OCCUPANTS

PATH OF EGRESS

FIRE EXTINGUISHER

SIGN LEGEND

SEE SHEET A960 FOR ADDITIONAL SIGN INFORMATION AND NOTES

A TOILET ROOM DOOR SIGN
B ACCESSIBLE TOILET ROOM SIGN
C ROOM IDENTIFICATION SIGN
D ACCESSIBLE ENTRANCE IDENTIFICATION SIGN
E EXIT SIGN
F EXIT ROUTE SIGN

Copyright © 2025
All ideas, designs, arrangements and plans indicated or represented by this drawing are owned by, and the property of, NICHOLS, MELBURG and ROSSETTO and were created, evolved and developed for use on, and in conjunction with, the specified project. None of such ideas, designs, arrangements and plans shall be used by or disclosed to any person, firm or corporation for any purpose whatsoever without the written permission of NICHOLS, MELBURG and ROSSETTO.

NICHOLS MELBURG & ROSSETTO
ARCHITECTS + ENGINEERS
300 KNOLLCREST DRIVE
REDDING, CA. 96002
(530) 222-3300 (530) 222-3538 FAX
http://www.nmrdesign.com

CONSULTANTS

LICENSE STAMPS

LICENSED ARCHITECT
KYLE MATTHEWS
C 27504
REN. 10/31/25
STATE OF CALIFORNIA

PROJECT NAME

TEHAMA COUNTY
CORNING
VETERAN'S HALL

1620 SOLANO ST.
CORNING, CA

SHEET TITLE

LIFE SAFETY & SIGNAGE FLOOR PLANS

DRAWING STATUS

CONSTRUCTION DOCUMENTS

REVISIONS

Sym.	Description	Date

Drawn By	KP
Date Issued	2/13/2025
Scale	1/8" = 1'-0"
Project No.	21-6497

SHEET No.

G110

Login Name: KenrP
Plot Date: February 13, 2025 - 8:23 am
File Name: H:\Projects\60\DOA\2021\21-6497 Tehama Co. Corning Vets Hall\Drawings\CVH - Life Safety Plan.dwg
XREFS: H:\CVH-B1.1-CVH_Title Block.1-CVH.DWG; H:\CVH.DWG

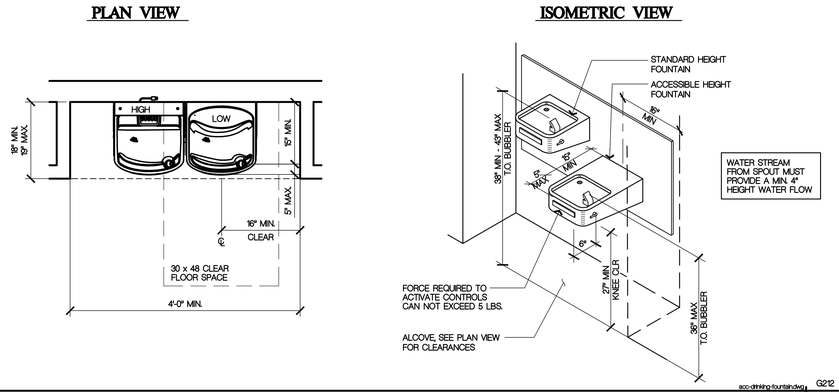

G212

ACCESSIBLE DRINKING FOUNTAIN

SCALE: 3/4"=1'-0"

9

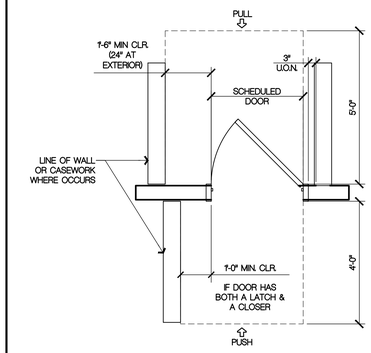

21-5850 G212

TYPICAL DOOR CLEARANCES

SCALE: 1/2"=1'-0"

5

1. ACCESSIBLE TOILET COMPARTMENT DOORS ARE TO BE EQUIPPED WITH LOOP OR U-SHAPE HANDLE IMMEDIATELY BELOW THE LATCH. CBC 11B-604&12.
2. CONTROLS FOR WATER CLOSETS, URINALS, SHOWERS AND LAVATORIES SHALL BE OPERABLE WITH ONE HAND AND SHALL NOT REQUIRE TIGHT GRASPING, PINCHING, OR TWISTING OF THE WRIST. THE FORCE REQUIRED TO ACTIVATE CONTROLS SHALL BE NO GREATER THAN 5 POUNDS- FORCE. CBC 11B-309.4.
3. ALL DIMENSIONS ARE CLEAR DIMENSIONS FROM EDGE OF FIXTURE OR FACE OF FINISH (F.O.F.).
4. GENERAL CONTRACTOR TO PROVIDE STRUCTURAL SUPPORT AND/OR METAL REINFORCEMENT IN STUD WALLS AT ALL CASEWORK, CABINETS, SHELVING, EQUIPMENT, ETC.
5. ALL RECESSED SPECIALITIES SHOWN ON ELEVATIONS THAT ARE LOCATED IN FIRE RATED WALLS ARE TO BE 5-SIDED WITH 5/8" TYPE 'X' GYP BOARD.
6. FAUCET CONTROLS AND OPERATING MECHANISMS AT COMMON-USE KITCHEN SINK AREAS SHALL BE OPERABLE WITH ONE HAND AND SHALL NOT REQUIRE TIGHT GRASPING, PINCHING OR TWISTING OF THE WRIST. THE FORCE REQUIRED TO ACTIVATE CONTROLS SHALL BE NOT GREATER THAN 5 POUNDS- FORCE. CBC 11B-309.4
7. AT LEAST ONE OF EACH TYPE OF STORAGE FACILITY (CABINET, SHELVES, CLOSETS OR DRAWERS) SHALL COMPLY WITH CBC SECTION 11B-225 BY HAVING THE FOLLOWING: A CLEAR FLOOR SPACE AT LEAST 30" BY 48" THAT ALLOWS EITHER A FORWARD OR PARALLEL APPROACH SHALL BE PROVIDED; SHALL BE WITHIN AT LEAST ONE OF THE REACH RANGES SPECIFIED IN CBC SECTION 11B-308; HAVING HARDWARE COMPLYING WITH CBC SECTION 11B-309.4 SUCH AS TOUCH LATCHES OR U-SHAPED PULLS.

21-5850 G212

ACCESSIBILITY GENERAL NOTES

SCALE: 1/4"=1'-0"

1

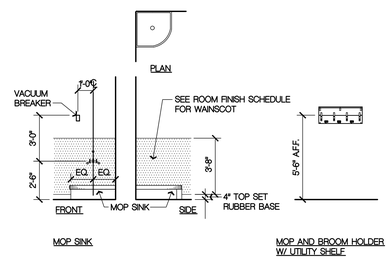

21-5850 G212

ENVIRONMENTAL SERVICES MOUNTING HEIGHTS

SCALE: 1/4"=1'-0"

10

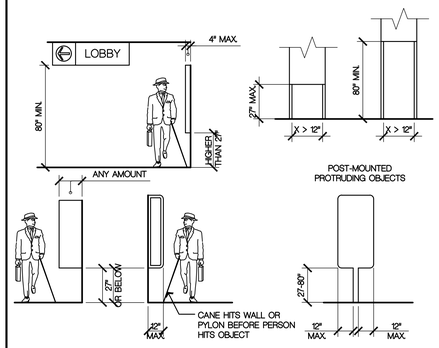

21-5850 G212

PROTRUDING OBJECTS

SCALE: 1/4"=1'-0"

6

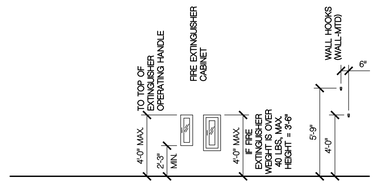

21-5850 G212

EQUIPMENT MOUNTING HEIGHTS

SCALE: 1/4"=1'-0"

2

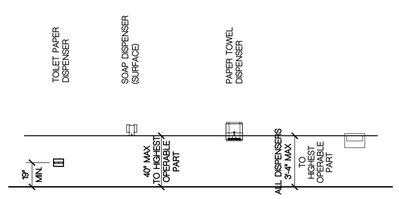

ACCESSORIES

21-5850 G212

TOILET ROOM MOUNTING HEIGHTS AND CLEARANCES

SCALE: 1/4"=1'-0"

11

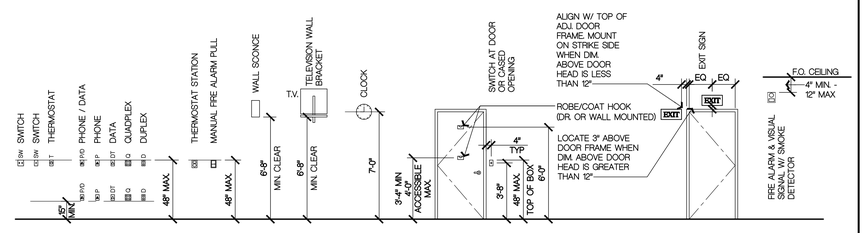

21-5850 G212

ELECTRICAL DEVICES MOUNTING HEIGHTS AND CLEARANCES

SCALE: 1/4"=1'-0"

3

*NOTE (FROM DIVISION 6 OF THE 2013 CBC. THESE DIAGRAMS ILLUSTRATE THE SPECIFIC REQUIREMENTS OF THESE REGULATIONS AND ARE INTENDED ONLY AS AN AID FOR BUILDING DESIGN AND CONSTRUCTION.

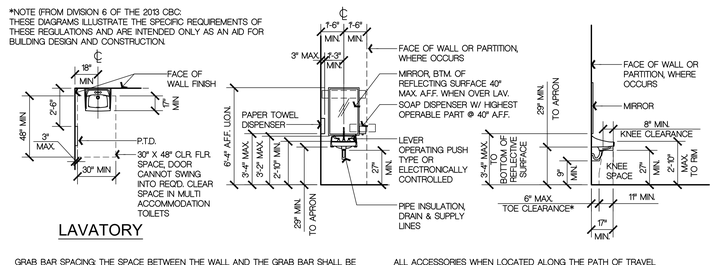

GRAB BAR SPACING: THE SPACE BETWEEN THE WALL AND THE GRAB BAR SHALL BE 1-1/2". THE SPACE BETWEEN THE GRAB BAR AND PROJECTING OBJECTS BELOW AND AT THE ENDS SHALL BE 1-1/2" MIN. THE SPACE BETWEEN THE GRAB BAR AND PROJECTING OBJECTS ABOVE SHALL BE 12" MIN. CBC 11B-609.3

ALL ACCESSORIES WHEN LOCATED ALONG THE PATH OF TRAVEL SHALL NOT TO PROJECT MORE THAN 4" FROM THE FINISHED WALL SURFACE WHEN LOCATED 27" ABOVE AND BELOW 80" FROM THE FINISH FLOOR PER CBC 11B-307.2

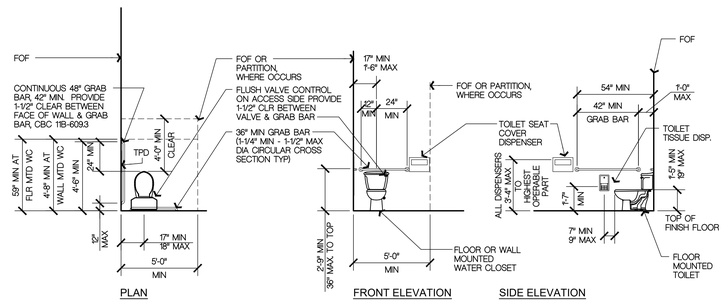

WATER CLOSET

SCALE: 1/4" = 1'-0"

21-5850 G212

TOILET ROOM MOUNTING HEIGHTS AND CLEARANCES

SCALE: 1/4"=1'-0"

4

Copyright © 2025

All ideas, designs, arrangements and plans indicated or represented by this drawing are owned by, and the property of, NICHOLS, MELBURG and ROSSETTO and were created, evolved and developed for use on, and in conjunction with, the specified project. None of such ideas, designs, arrangements and plans shall be used, or disclosed to any person, firm or corporation for any purpose whatsoever, without the written permission of NICHOLS, MELBURG and ROSSETTO.

NICHOLS MELBURG & ROSSETTO
ARCHITECTS + ENGINEERS
300 KNOLLCREST DRIVE
REDDING, CA. 96002
(530) 222-3300 (530) 222-3538 FAX
http://www.nmrdesign.com

CONSULTANTS

LICENSE STAMPS

LICENSED ARCHITECT
KYLE MATTHEWS PORTER
C 27504
EXP. 10/31/25
STATE OF CALIFORNIA

PROJECT NAME

TEHAMA COUNTY
CORNING
VETERAN'S HALL

1620 SOLANO ST.
CORNING, CA

SHEET TITLE

TYPICAL ACCESSIBILITY REQUIREMENTS

DRAWING STATUS

CONSTRUCTION DOCUMENTS

REVISIONS

Sym.	Description	Date

Drawn By	KP
Date Issued	2/13/2025
Scale	AS NOTED
Project No.	21-6497

SHEET No.

G212

Login Name: kpeep
Plot Date: February 13, 2025 - 8:31 am
File Name: N:\Projects\2000\2ACS\2021\21-6497 Tehama Co. Corning Vets Hall\Drawings\CVH-Accessibility Detailing\
XREFS: 3ccvh-01-f 1ccvh-ex 1ccvh-ldd 1ccvh-gnr notes 1ccvh-struct 1ccvh-fdtn 1ccvh-fdtn-accessories 1 acp-print.dwg 1 v-CVH_Title Block 1 acc-drinking-fountain 1 v-CVH-R11 1 v-CVH-GRID

GENERAL NOTES:

1. THE CONTRACTOR SHALL VERIFY ALL DIMENSIONS AND CONDITIONS AT THE JOB SITE, AND SHALL BE RESPONSIBLE FOR CONDITIONS OF ALL WORK AND MATERIALS, INCLUDING THOSE FURNISHED BY SUB-CONTRACTORS. HE WILL IMMEDIATELY NOTIFY THE ENGINEER AND THE OWNER OF ANY DISCREPANCIES.
2. ALL MATERIALS AND WORKMANSHIP SHALL BE PERFORMED IN ACCORDANCE WITH THE MOST CURRENT VERSION OF THE CALTRANS STANDARD CONSTRUCTION SPECIFICATIONS, BUTTE COUNTY IMPROVEMENT STANDARDS, AND TO THE APPLICABLE PROVISIONS OF THE CURRENT EDITION OF THE CALIFORNIA BUILDING CODE.
3. NOTES AND DETAILS ON THE DRAWINGS SHALL TAKE PRECEDENCE OVER THE GENERAL NOTES ON THIS SHEET.
4. THE CONTRACTOR SHALL OBTAIN AND PAY FOR ALL PERMITS AND INSPECTIONS AS REQUIRED.
5. NOTE REGARDING EARTHWORK: THIS SITE WAS DESIGNED TO CONFORM TO EXISTING CONDITIONS. ROBERTSON ERICKSON DOES NOT WARRANT OR GUARANTEE A BALANCED SITE. FACTORS AFFECTING A SITE BALANCE INCLUDE SOILS FACTOR (VOLUME CHANGE), TYPE AND EXTENT OF UTILITY TRENCHES, SUBGRADE DEPTHS, PAD GRADING, AND LANDSCAPE TREATMENTS. THE CONTRACTOR SHOULD MAKE HIS OWN ESTIMATES OF EARTH-WORK QUANTITIES AND RELY ON THEM. THE CONTRACTOR SHOULD ALSO MAKE PROVISIONS FOR AN IMBALANCE BY IDENTIFYING ON-SITE OR OFF-SITE DISPOSAL OR EXTRACTION SITES, AND BY PROVIDING REASONABLE CONTINGENCIES FOR PAYING FOR SUCH WORK.
6. ALL MATERIALS SPECIFIED ON THESE PLANS SHALL BE INSTALLED ACCORDING TO MANUFACTURER'S INSTRUCTIONS AND RECOMMENDATIONS.
7. ROBERTSON ERICKSON, INC. WILL NOT PROVIDE ELECTRONIC FILES OR VERTICAL AND HORIZONTAL CONTROL POINTS TO BE USED IN PREPARATION OF "STAKING MODELS" OR FOR USE IN "GPS CONSTRUCTION STAKING" ACTIVITIES TO ANY INDIVIDUAL OR COMPANY WHO IS NOT LICENSED IN THE STATE OF CALIFORNIA TO PRACTICE CIVIL ENGINEERING AND/OR PROFESSIONAL LAND SURVEYING.
8. ALL REQUIRED FIRE HYDRANTS MUST BE IN PLACE AND USABLE BEFORE ANY COMBUSTIBLE CONSTRUCTION MATERIALS ARE BROUGHT ON TO THE SITE AND MUST REMAIN ACCESSIBLE AND USABLE BY THE FIRE DEPARTMENT AT ALL TIMES DURING CONSTRUCTION.

SITE CLEARING:

1. REMOVE SURFACE DEBRIS.
2. DEMOLISH AND REMOVE CONCRETE, PAVING, ETC. IN CONSTRUCTION AREA.
3. CLEAR NEW CONSTRUCTION AREA OF PLANT LIFE AND GRASS.
4. CONFORM TO APPLICABLE CODE FOR DISPOSAL OF DEBRIS.
5. COORDINATE CLEARING WORK WITH UTILITY COMPANIES.

PROTECTION:

1. PROTECT BENCH MARKS, EXISTING STRUCTURES, FENCES, ROADS, SIDEWALKS, PAVING, AND CURBS THAT ARE TO REMAIN.
2. PROTECT ABOVE OR BELOW GRADE UTILITIES WHICH ARE TO REMAIN.
3. PROTECT ALL LANDSCAPING AND TREES THAT ARE TO REMAIN.

PREPARATION:

1. IDENTIFY KNOWN BELOW GRADE UTILITIES. CALL UNDERGROUND SERVICES ALERT (U.S.A.) 48 HOURS BEFORE EXCAVATION. STAKE AND FLAG LOCATIONS. ROBERTSON ERICKSON WILL NOT ACCEPT RESPONSIBILITY FOR THE EXISTENCE OR NON-EXISTENCE OF UNDERGROUND UTILITIES.
2. IDENTIFY AND FLAG ABOVE GRADE UTILITIES.
3. MAINTAIN AND PROTECT EXISTING UTILITIES REMAINING WHICH PASS THROUGH WORK AREA.
4. UPON DISCOVERY OF UNKNOWN UTILITIES OR CONCEALED CONDITIONS, DISCONTINUE AFFECTED WORK; CONTACT ENGINEER AND OWNER.

PAVEMENT SECTIONS:

1. ASPHALT CONCRETE SHALL BE TYPE B (1/2"MAX) OVER CLASS 2 AGGREGATE BASE. ENGINEERED FILL/NATIVE SHALL BE COMPACTED TO 95% RELATIVE DENSITY (12" DEPTH).

ONSITE CONCRETE:

1. PORTLAND CEMENT SHALL CONFORM TO ASTM C 150, TYPE II OR II-LOW ALKALI. AGGREGATE FOR STONE CONCRETE SHALL CONFORM TO ASTM C 33, AND GRADE A PER THE CALIFORNIA BUILDING MAXIMUM AGGREGATE SIZE FOR FOOTINGS, SLABS-ON-GRADE AND MASS CONCRETE SHALL NOT EXCEED 1-1/2". MAXIMUM AGGREGATE SIZE FOR ALL OTHER CONCRETE SHALL NOT EXCEED 3/4".
2. CONTROL JOINT SPACING SHALL NOT EXCEED 8 FEET ON CENTER BOTH WAYS OR AS SHOWN ON THESE PLANS.
3. CONTROL JOINTS SHALL HAVE A DEPTH NOT LESS THAN 1/4 THE SLAB THICKNESS.
4. INSTALL EXPANSION (ISOLATION) JOINTS WHERE CONCRETE IS POURED AGAINST PERMANENT OBJECTS.
5. MINIMUM ULTIMATE COMPRESSIVE STRENGTH SHALL BE 2500 PSI @ 28 DAYS.
6. THE OUTSIDE DIAMETER (O.D.) OF CONDUIT OR PIPE PLACED IN THE PLANE OF A SLAB SHALL NOT EXCEED 30% OF SLAB THICKNESS UNLESS SPECIFICALLY DETAILED OTHERWISE AND SHALL BE LOCATED IN MIDDLE 1/3 OF SLAB. CLEAR SPACING BETWEEN ADJACENT CONDUITS OR PIPES SHALL BE TWICE THE LARGER O.D. MINIMUM, UNLESS OTHERWISE NOTED ON PLANS.
7. SIDEWALKS SHALL BE 4" THICK CONCRETE MINIMUM OVER 2" LEVELING SAND CONTROL JOINTS AT 4' O.C OR CLASS II AB COMPACTED TO 95%. R.D.

SANITARY SEWER SYSTEM:

1. SANITARY SEWER PIPE SHALL BE PVC SCHEDULE 40.
2. MANHOLES SHALL BE RATED FOR H-20 LOADING AS DETERMINED BY THE D.O.T.
3. WHERE A CONNECTION IS TO BE MADE TO AN EXISTING SEWER OR STORM DRAIN STRUCTURE, SAID EXISTING SEWER OR STORM DRAIN STRUCTURE SHALL BE UNCOVERED AND CHECKED FOR LOCATION AND ELEVATION PRIOR TO ORDERING MATERIALS AND, SUBMITTING CUT SHEETS TO THE ARCHITECT. ANY DISCREPANCY BETWEEN THE PLANS AND FIELD INFORMATION SHALL BE REPORTED TO THE ARCHITECT AND CIVIL ENGINEER
4. SEWER TRENCH BACKFILL SHALL BE IN ACCORDANCE WITH CITY OF CORNING STANDARD DETAILS.

STORM DRAIN SYSTEM:

1. STORM DRAIN PIPES SHALL BE HDPE TYPE "S" OR AN APPROVED EQUIVALENT. PIPES SHALL BE RATED FOR H-20 LOADING AS DETERMINED BY THE DEPARTMENT OF TRANSPORTATION (D.O.T.).
2. AREA DRAINS SHALL BE COOK CONCRETE PRODUCTS OR AN APPROVED EQUIVALENT, AND RATED FOR H-20 LOADING AS DETERMINED BY THE D.O.T.

PRIVATE WATER MAIN SYSTEM NOTES:

1. DOMESTIC WATER MAINS SHALL BE POLYVINYL CHLORIDE PIPE (PVC) AWWA C-900 CLASS 150 FIRE WATER MAINS SHALL BE POLYVINYL CHLORIDE PIPE (PVC) C-900 CLASS 200. WATER MAINS SMALLER THAN 4" DIAMETER SHALL BE SCHEDULE 40 CONFORMING TO ASTM 1785.
2. MATERIALS
   - 2.1. POLYVINYL CHLORIDE PIPE (PVC) SHALL BE OF TYPE IN ACCORDANCE WITH AWWA C900 STANDARDS. 4" AND SMALLER SHALL BE SCHEDULE 40 CONFORMING TO ASTM 1785.
   - 2.2. DUCTILE IRON PIPE AND FITTINGS (D.I.) SHALL BE OF TYPE IN ACCORDANCE WITH AWWA C151. 4" AND SMALLER SHALL BE CLASS 51. 6" AND LARGER SHALL BE CLASS 50. PIPE AND FITTINGS SHALL BE FLANGED AND FLANGE GASKETS SHALL BE A 1/8" THICK RED RUBBER RING SUITABLE FOR USE WITH POTABLE WATER SYSTEMS.
3. IN AREAS WHERE THE WATER MAINS INTERSECT OTHER SERVICES, THE WATER MAINS SHALL BE INSTALLED SO THAT THE WATER MAINS CROSS ABOVE THE OTHER SERVICES. WHERE THE INTERSECTION OF THE WATER MAINS AND OTHER SERVICES CONFLICT, GRAVITY SYSTEMS SHALL HAVE CONTROL OVER PRESSURE SYSTEMS.
4. STANDARD MINIMUM COVER IS 30". IF MINIMUM COVER CANNOT BE PROVIDED AS SHOWN, CONTACT ENGINEER PRIOR TO BACK FILL.
5. ALL WATER MAIN LENGTHS ARE APPROXIMATE AND THE CONTRACTOR HAS THE RESPONSIBILITY TO VERIFY THE EXACT LENGTH OF ALL WATER MAINS AND THE LOCATIONS OF FITTINGS.
6. CONTRACTOR TO FURNISH ALL TEES, VALVES, ELBOWS, MECHANICAL JOINT RESTRAINTS & THRUST BLOCKS AS NECESSARY TO INSTALL THE WATER & FIRE SERVICE MAIN.
7. MECHANICAL JOINT RESTRAINTS SHALL BE INSTALLED PER MANUFACTURER'S RECOMMENDATIONS & SPECIFICATIONS BY EBBA IRON INC. OR APPROVED EQUAL.

AIR QUALITY NOTES:

A. WATER ALL ACTIVE CONSTRUCTION AREAS AT LEAST TWICE DAILY. THE FREQUENCY SHOULD BE BASED ON THE TYPE OF OPERATION, SOIL CONDITIONS, AND WIND EXPOSURE.

B. IF NECESSARY, APPLY CHEMICAL SOIL STABILIZERS TO INACTIVE CONSTRUCTION AREAS (DISTURBED AREAS THAT ARE UNUSED FOR AT LEAST FOUR CONSECUTIVE DAYS) TO CONTROL DUST EMISSIONS. DUST EMISSIONS SHOULD BE CONTROLLED AT THE SITE FOR BOTH ACTIVE AND INACTIVE CONSTRUCTION AREAS THROUGHOUT THE ENTIRE CONSTRUCTION PERIOD, INCLUDING HOLIDAYS.

C. LIMIT VEHICLE SPEEDS TO 15 MPH ON UNPAVED ROADS.

D. SUSPEND LAND CLEARING, GRADING, EARTH MOVING, OR EXCAVATION ACTIVITIES WHEN WIND SPEEDS EXCEED 20 MPH.

E. IF APPLICABLE, APPLY NON-TOXIC BINDERS (E.G. LATEX ACRYLIC COPOLYMER) TO EXPOSED AREAS AFTER CUT AND FILL OPERATION AND HYDROSEED THE AREA

F. PLANT VEGETATIVE GROUND COVER IN DISTURBED AREAS AS SOON AS POSSIBLE.

G. COVER INACTIVE STORAGE AREAS.

H. CONTRACTOR SHALL CONSULT WITH THE TEHAMA COUNTY AIR QUALITY CONTROL DISTRICT AND OBTAIN PERMITS AS NECESSARY.

I. SWEEP PAVED STREETS ADJACENT TO THE SITE WHERE VISIBLE SILT OR MUD DEPOSITS HAVE ACCUMULATED DUE TO CONSTRUCTION ACTIVITIES.

J. POST A PUBLICLY VISIBLE SIGN AT THE CONSTRUCTION SITE WITH THE NAME AND TELEPHONE NUMBER OF THE PERSON TO CONTACT REGARDING DUST COMPLAINTS. THIS PERSON SHALL RESPOND AND TAKE CORRECTIVE ACTION WITHIN 24 HOURS. THE TELEPHONE NUMBER OF THE TCAPCD SHALL ALSO BE VISIBLE TO ENSURE COMPLIANCE WITH TCAPCD RULES 200 AND 205 (NUISANCE AND FUGITIVE DUST EMISSIONS).

K. PRIOR TO FINAL OCCUPANCY, THE APPLICANT SHALL DEMONSTRATE THAT ALL GROUND SURFACES ARE TREATED SUFFICIENTLY TO MINIMIZE FUGITIVE DUST EMISSIONS. FUGITIVE DUST EMISSIONS ARE CONSIDERED DUST CLOUDS CAUSED BY WIND, TRAFFIC, OR OTHER DISTURBANCES TO EXPOSED GROUND SURFACES.

L. EXHAUST EMISSIONS WILL BE MINIMIZED BY MAINTAINING EQUIPMENT IN GOOD REPAIR AND PROPER TUNE ACCORDING TO THE MANUFACTURER'S SPECIFICATIONS.

M. IF CONSTRUCTION ACTIVITIES OCCUR DURING SMOG SEASON (MAY-OCTOBER), EQUIPMENT WILL NOT BE ALLOWED TO RUN IDLE FOR LONG PERIODS OF TIME.

N. EQUIPMENT SHALL BE KEPT IN PROPER TUNE, AND IDLING SHALL BE MINIMIZED.

CULTURAL RESOURCES:

IF ANY POTENTIAL ARCHAEOLOGICAL, CULTURAL, OR PALEONTOLOGICAL RESOURCES ARE ENCOUNTERED DURING CONSTRUCTION, ALL WORK SHALL CEASE WITHIN THE AREA OF THE FIND PENDING AN EXAMINATION OF THE SITE AND MATERIALS BY A PROFESSIONAL ARCHAEOLOGIST. THE ARCHAEOLOGIST WILL ASSESS THE SIGNIFICANCE OF THE FIND AND PREPARE APPROPRIATE MITIGATION MEASURES FOR REVIEW BY THE BUILDING AND DEVELOPMENT SERVICES DIRECTOR. ALL MITIGATION MEASURES DETERMINED BY THE BUILDING AND DEPARTMENT OF DEVELOPMENT SERVICES DIRECTOR TO BE APPROPRIATE FOR THIS PROJECT SHALL BE IMPLEMENTED PURSUANT TO THE TERMS OF THE ARCHAEOLOGIST'S REPORT.

NOISE MITIGATION MEASURES:

1. ALL HEAVY CONSTRUCTION EQUIPMENT AND ALL STATIONARY NOISE SOURCES (SUCH AS DIESEL GENERATORS) SHALL BE IN GOOD WORKING ORDER AND HAVE MANUFACTURER INSTALLED MUFFLERS.
2. LIMIT CONSTRUCTION ACTIVITIES TO THE HOURS BETWEEN 7AM AND 9PM DAILY, EXCEPT SUNDAYS AND HOLIDAYS. FOR SUNDAYS AND HOLIDAYS, LIMIT CONSTRUCTION ACTIVITIES TO THE HOURS BETWEEN 10AM AND 6PM.

SHORING & SAFETY NOTES:

THE CONTRACT DRAWINGS AND SPECIFICATIONS REPRESENT THE FINISHED STRUCTURE. UNLESS OTHERWISE SHOWN, THEY DO NOT INDICATE THE METHOD OF CONSTRUCTION. THE CONTRACTOR SHALL PROVIDE ALL MEASURES NECESSARY TO PROTECT THE STRUCTURE, WORKERS AND OTHER PERSONS DURING DEMOLITION AND CONSTRUCTION. SUCH MEASURES SHALL INCLUDE BUT NOT BE LIMITED TO BRACING, SHORING, SCAFFOLDING, PLANKING, ETC. THE CONTRACTOR, AT HIS OWN EXPENSE SHALL ENGAGE PROPERLY QUALIFIED PERSONS TO DETERMINE WHERE AND HOW TEMPORARY PRECAUTIONARY MEASURES SHALL BE USED AND INSPECT SAME AT THE JOB SITE. OBSERVATION VISITS TO THE SITE BY THE ARCHITECT OR ENGINEER SHALL NOT CONSTITUTE INSPECTION OF THE ABOVE ITEMS. THE ENGINEER IS NOT RESPONSIBLE FOR INSPECTION OR ACCEPTANCE OF WORKMANSHIP OR MATERIALS ON THIS PROJECT.

HAZARD IDENTIFICATION:

CONTRACTORS ARE HEREBY ADVISED THAT THEY MAY BE EXPOSED TO HAZARDOUS CONDITIONS WHEN INSTALLING OR MODIFYING SANITARY SEWER PIPELINES AND STRUCTURES. SOME OF THESE HAZARDS INCLUDE BUT ARE NOT LIMITED TO: EXPOSURE TO HAZARDOUS GASSES; OXYGEN DEFICIENT ENVIRONMENTS; SYSTEMS SUCH AS HYDROGEN SULFIDE, CARBON DIOXIDE, METHANE, AND OTHER FLAMMABLE OR EXPLOSIVE GASSES; EXPOSURE TO SEWAGE WHICH MAY CONTAIN BACTERIOLOGICAL, CHEMICAL, AND OTHER CONSTITUENTS HARMFUL TO HUMANS; AND EXPOSURE TO AREAS WHICH HAVE LIMITED OR RESTRICTED ACCESS AND EGRESS, WHICH MAY BE CONSIDERED PERMITTED CONFINED SPACES BY STATE AND FEDERAL OSHA REQUIREMENTS.

ADDITIONAL NOTES:

1. CONTRACTOR IS RESPONSIBLE FOR TRAFFIC CONTROL. COORDINATE ALL ROADWAY/PEDESTRIAN SHUTDOWNS WITH OWNER & COUNTY PRIOR TO IMPLEMENTATION.
2. THE EXISTENCE AND LOCATION OF ALL UTILITIES SHALL BE VERIFIED BY THE CONTRACTOR PRIOR TO THE START OF CONSTRUCTION.
3. CALL CORNING PUBLIC WORKS DEPARTMENT AT 530-824-2489 TO SCHEDULE INSPECTION AT LEAST 24 HOURS PRIOR TO CONSTRUCTION.
4. ALL WORK ON GRAVITY UTILITIES TO COMMENCE AT THE DOWNSTREAM END OF LINES.
5. CONTRACTOR RESPONSIBLE FOR OBTAINING AN ENCROACHMENT PERMIT.

LEGEND:

- AREA DRAIN
- BACK FLOW PREVENTER
- CLEAN OUT
- DRAIN INLET
- FIRE HYDRANT
- GUY WIRE/ANCHOR
- JOINT POLE/ POWER POLE
- LIGHT
- MONUMENT
- SD MANHOLE
- SIGN
- SS MANHOLE
- TREE
- WATER METER
- WATER VALVE

Line	Description
OHE&T	EXISTING OVERHEAD ELECTRIC & TELEPHONE
SS	EXISTING SANITARY SEWER MAIN
SD	EXISTING STORM DRAIN
G	EXISTING UNDERGROUND GAS
E	EXISTING UNDERGROUND ELECTRIC
W	EXISTING UNDERGROUND WATER
X	EXISTING FENCE
	EXISTING EDGE OF PAVEMENT (EP)
	GENERAL DEMOLITION LIMITS
98.00	EXISTING ELEVATION CONTOUR LINE
98.00	PROPOSED ELEVATION CONTOUR LINE
	PROPERTY LINE
	EASEMENT LINE
	CENTERLINE
(N)SD	NEW STORM DRAIN LINE
(N)SS	NEW SANITARY SEWER LINE
(N)E	NEW ELECTRICAL CONDUIT
(N)G	NEW GAS LINE
(N)W	NEW WATER LINE
(N)FW	NEW FIRE WATER LINE
	SAWCUT LINE

ABBREVIATIONS:

A.B.	AGGREGATE BASE
A.C.	ASPHALT CONCRETE
AD	AREA DRAIN
ATT	TELEPHONE LINE
BFP	BACK FLOW PREVENTER
BL	BREAK LINE
BPG	BUILDING PERIMETER GRADE
CMP	CORRUGATED METAL PIPE
CO	CLEAN OUT
CONC.	CONCRETE
DI	DROP INLET
DS	DOWNSPOUT
D/W	DRIVEWAY
E	ELECTRIC
EGR	EDGE OF GRAVEL ROAD
EP	EDGE OF PAVEMENT
EX.	EXISTING
FDC	FIRE DEPT. CONNECTION
FF	FINISHED FLOOR
FH	FIRE HYDRANT
FL	FLOW LINE
FS	FINISHED SURFACE
G	GAS
GB	GRADE BREAK
GM	GAS METER
GR	GRATE ELEVATION
GTD	GRADE TO DRAIN
GV	GAS VALVE
HB	HOSE BIB
HDPE	HIGH DENSITY POLYETHYLENE
ICV	IRRIGATION CONTROL VALVE
ID	INSIDE DIAMETER
INV	INVERT OF PIPE
LF	LINEAR FEET
LOC	LOCATION
LS	LANDSCAPE
(N)	NEW
NTS	NOT TO SCALE
OHC	OVERHEAD CABLE
OHE	OVERHEAD ELECTRIC
OHE&T	OVERHEAD ELECTRIC & TELEPHONE
PIV	POST INDICATOR VALVE
PL	PROPERTY LINE
PP	POWER POLE
PUE	PUBLIC UTILITY EASEMENT
PVC	POLYVINYL CHLORIDE
RCP	REINFORCED CONCRETE PIPE
R.D.	RELATIVE DENSITY
RWL	RAIN WATER LEADER
SD	STORM DRAIN
SDMH	STORM DRAIN MANHOLE
SF	SQUARE FEET
SS	SANITARY SEWER
SSCO	SANITARY SEWER CLEANOUT
SSMH	SANITARY SEWER MANHOLE
SW	SIDEWALK
T	TREE
TBM	TEMPORARY BENCH MARK
TC	TOP OF CURB
TE	TRASH ENCLOSURE
TYP	TYPICAL
W	WATER
WB	WATER BOX
WM	WATER METER
WV	WATER VALVE

SHEET LIST:

C1.0	TITLE SHEET
C2.0	EXISTING TOPOGRAPHY/DEMOLITION PLAN
C3.0	GRADING PLAN
C4.0	UTILITY PLAN
C5.0	PAVING PLAN
C6.0	DETAIL SHEET
C6.1	DETAIL SHEET 2
C7.0	EROSION & SEDIMENT CONTROL PLAN

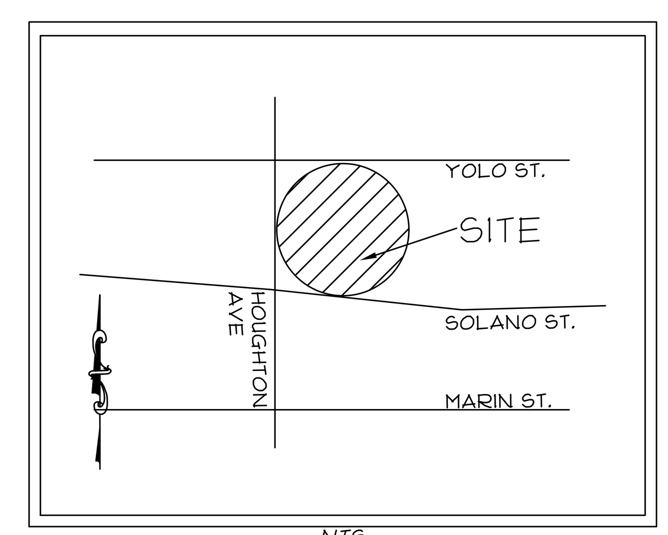

NTS
CORNING, CALIFORNIA
VICINITY MAP

Copyright © 2025

All ideas, designs, arrangements and plans indicated or represented by this drawing are owned by, and the property of, NICHOLS, MELBURG and ROSSETTO and were created, evolved and developed for use on, and in conjunction with, the specified project. None of such ideas, designs, arrangements or plans shall be used by, or disclosed to any person, firm or corporation for any purpose whatsoever without the written permission of NICHOLS, MELBURG and ROSSETTO.

NICHOLS MELBURG & ROSSETTO
ARCHITECTS + ENGINEERS
300 KNOLLCREST DRIVE
REDDING, CA. 96002
(530) 222-3300 (530) 222-3538 FAX
http://www.nmrdesign.com

CONSULTANTS

Robertson Erickson
CIVIL ENGINEERS & SURVEYORS
888 Manzanita Court
Suite 101
Chico, California 95926
530-894-3500 Fax 530-894-8955
robertsonerickson.com

LICENSE STAMPS

REGISTERED PROFESSIONAL ENGINEER
RUSSELL T. ERICKSON
No. 58460
CIVIL
STATE OF CALIFORNIA

02/18/2025

PROJECT NAME

TEHAMA COUNTY
CORNING
VETERAN'S HALL

1620 SOLANO ST.
CORNING, CA

SHEET TITLE

TITLE SHEET

DRAWING STATUS

CONSTRUCTION DOCUMENTS

REVISIONS

Sym.	Description	Date

Drawn By	KMJ
Date Issued	2/13/2025
Scale	N/A
Project No.	21-6497

SHEET No.

C1.0

Login Name: keenan
Plot Date: February 13, 2025 - 10:56 am
File Name: K:\Projects\24-531 NMR Corning Veteran's Hall\Plan Sheets\C1.0 Title Sheet Veterans Hall.dwg
XREFS: Title Block Veterans Hall | x-CVH_Title Block

LEGEND:

- DEMO CONCRETE
- DEMO ASPHALT
- REMOVE TREE
- GENERAL DEMO LIMITS
- SAWCUT LINE

Note: contractor to sawcut, demolish, remove, and dispose of all materials following all codes as appropriate. Coordinate with utility companies for disconnection of facilities. Coordinate with City of Corning for Encroachment permit for any demolition within public right of way.

10 0 10 20 30
SCALE: 1" =10'

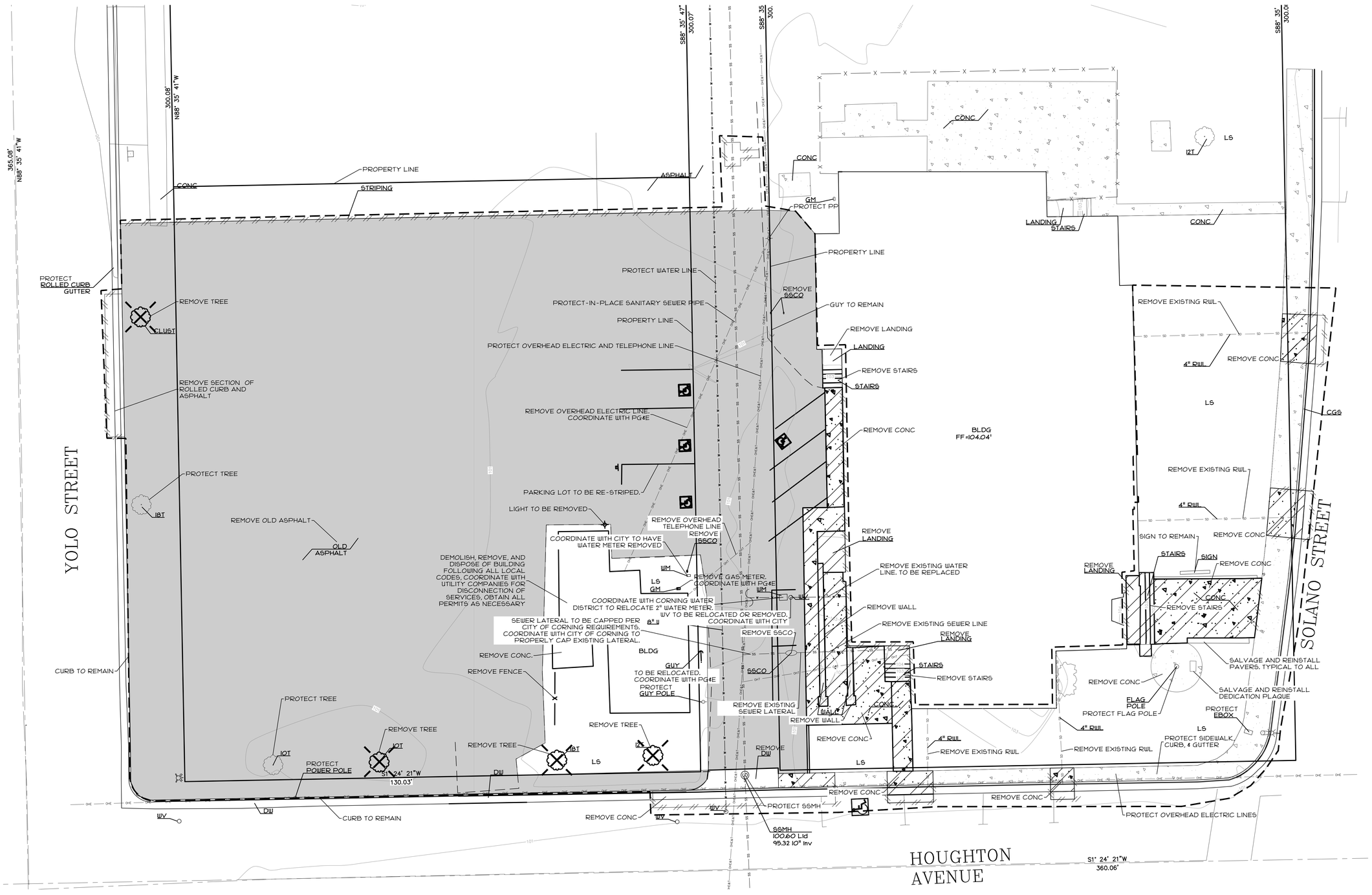

Copyright © 2025

All ideas, designs, arrangements and plans indicated or represented by this drawing are owned by, and the property of, NICHOLS, MELBURG and ROSSETTO and were created, evolved and developed for use on, and in conjunction with, the specified project. None of such ideas, designs, arrangements or plans shall be used by, or disclosed to any person, firm or corporation for any purpose whatsoever without the written permission of NICHOLS, MELBURG and ROSSETTO.

NICHOLS MELBURG ROSSETTO
ARCHITECTS + ENGINEERS
300 KNOLLCREST DRIVE
REDDING, CA. 96002
(530) 222-3300 (530) 222-3538 FAX
http://www.nmrdesign.com

CONSULTANTS

Robertson Erickson
CIVIL ENGINEERS & SURVEYORS
888 Manzanita Court
Suite 101
Chico, California 95926
530-894-3500 Fax 530-894-8955
robertsonerickson.com

LICENSE STAMPS

REGISTERED PROFESSIONAL ENGINEER RUSSELL E. ERICKSON No. 58460 CIVIL STATE OF CALIFORNIA

02/18/2025

PROJECT NAME

TEHAMA COUNTY CORNING VETERAN'S HALL

1620 SOLANO ST. CORNING, CA

SHEET TITLE

EXISTING TOPOGRAPHY/ DEMOLITION PLAN

DRAWING STATUS

CONSTRUCTION DOCUMENTS

REVISIONS

Sym.	Description	Date

Drawn By	--
Date Issued	2/13/2025
Scale	AS INDICATED
Project No.	21-6497

SHEET No.

C2.0

Login Name: keenan
Plot Date: February 13, 2025 - 10:56 am
File Name: K:\Projects\24-531 NMR Corning Veteran's Hall\Plan Sheets\C2.0 Topo Demo Plan Veterans Hall.dwg
XREFS: Title Block Veterans Hall | x-CVH_Title Block | 24-531 nmr vet Topo CAD

GRADING CONSTRUCTION NOTES

1. INSTALL 6" VERTICAL CURB. SEE C6.0/1 FOR CURB SECTION.
2. INSTALL 6" CURB AND GUTTER. SEE C6.0/2 FOR CURB AND GUTTER SECTION.
3. INSTALL STAIRS. 2 STAIRS WITH 6" VERTICAL RISE. SEE ARCHITECTURAL PLANS FOR STAIR DETAILS.
4. INSTALL ASPHALT PAVING. SEE PAVING PLAN FOR DETAILS.
5. INSTALL LANDING. SLOPES TO REMAIN UNDER 2% IN ALL DIRECTIONS.
6. INSTALL PATH OF TRAVEL. CROSS-SLOPES TO REMAIN UNDER 2% AND SLOPES IN DIRECTION-OF-TRAVEL TO REMAIN UNDER 5%.
7. INSTALL ADA PARKING SPOT. SLOPES TO REMAIN UNDER 2% IN ALL DIRECTIONS. SEE A060/1 FOR ARCHITECTURAL DETAIL.
8. CREATE 2' GAP IN CURB FOR FLOW INTO DRAIN ROCK SWALE. SEE C6.0/3 FOR DETAIL.
9. INSTALL RAMP. SLOPES TO REMAIN UNDER 8%. SEE ARCHITECTURAL PLANS FOR DETAILS.
10. INSTALL NEW DRIVEWAY. SEE C6.0/5 SECTION-AA FOR DETAIL..
11. INSTALL NEW CITY OF CORNING SIDEWALK, VERTICAL CURB, AND GUTTER. SEE C6.0/6 FOR STANDARD DETAIL. INSTALL 3" DIAMETER DRAIN PIPES TO DAYLIGHT AT FLOWLINE, COVER PIPE SECTION WITH 24" SWATH OF WELDED WIRE FABRIC IN CONCRETE ABOVE.
12. INSTALL ELECTRICAL PAD. SEE ELECTRICAL PLANS FOR DETAILS.
13. INSTALL CITY OF CORNING DRIVEWAY. SEE C6.0/7 FOR DETAILS.
14. INSTALL STAIRS. 5 STAIRS WITH 6" VERTICAL RISE. SEE ARCHITECTURAL PLANS FOR STAIR DETAIL.
15. INSTALL STAIRS. 4 STAIRS WITH 6" VERTICAL RISE. SEE A060/12 FOR STAIR DETAIL.
16. INSTALL BOLLARD. SEE C6.0/4 FOR DETAIL.
17. NEW PLANTER BOX WALL. SEE S410/17 FOR DETAIL.
18. INSTALL NEW CITY OF CORNING SIDEWALK WITH SETBACK FROM EXISTING CURB. SEE C6.0/5 FOR STANDARD DETAIL.
19. INSTALL 6" GAP IN CURB FOR DRAINAGE.
20. NEW COLUMN. SEE ARCHITECTURAL PLANS FOR DETAILS.
21. INSTALL NEW RETAINING WALL. SEE ARCHITECTURAL PLANS FOR DETAILS.
22. NEW GUY WIRE. COORDINATE WITH PG&E.
23. RAISE LID AS NECESSARY TO BE FLUSH WITH NEW PAVEMENT

10 0 10 20 30

SCALE: 1" =10'

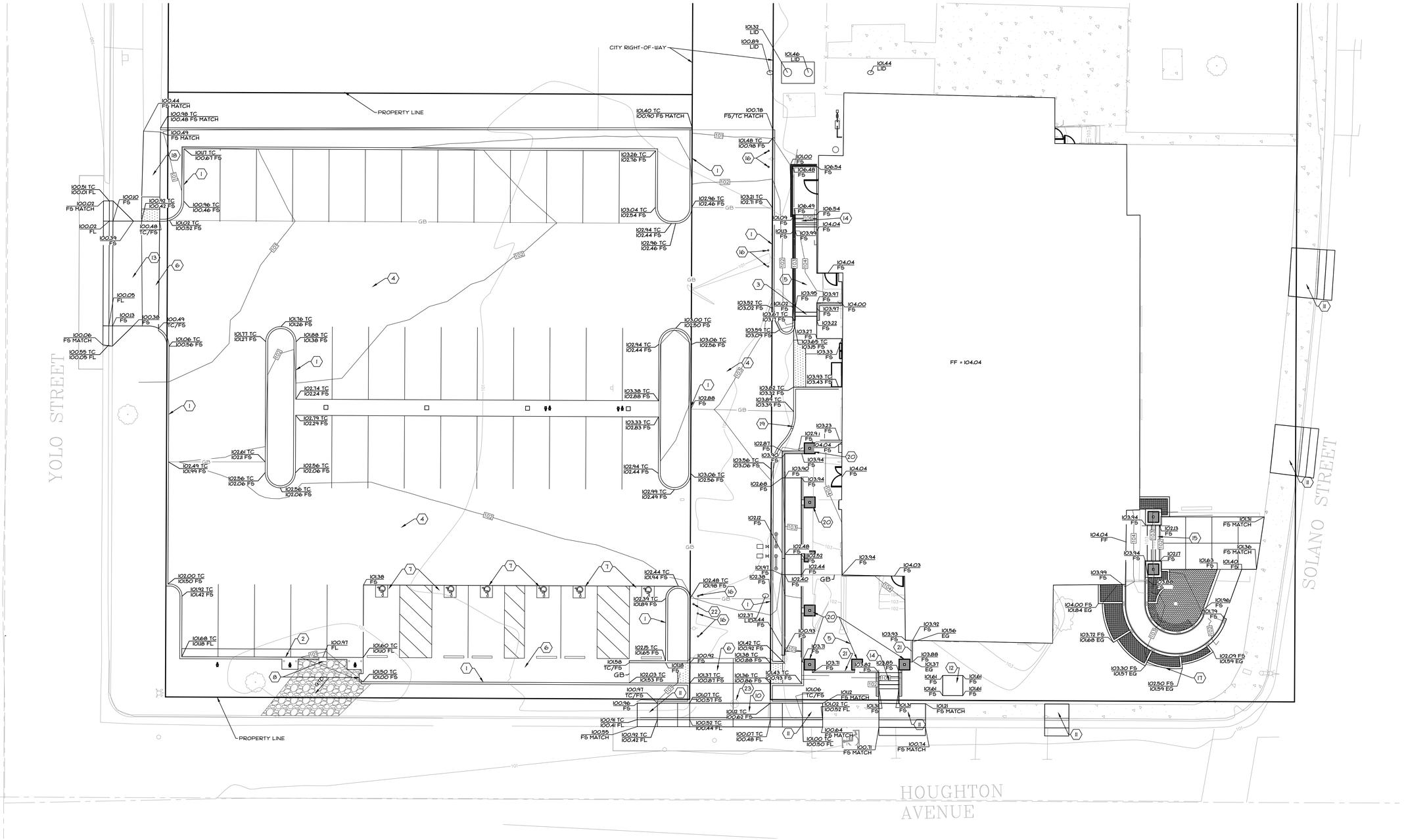

Copyright © 2025
All ideas, designs, arrangements and plans indicated or represented by this drawing are owned by, and the property of, NICHOLS, MELBURG and ROSSETTO and were created, evolved and developed for use on, and in conjunction with, the specified project. None of such ideas, designs, arrangements or plans shall be used by, or disclosed to any person, firm or corporation for any purpose whatsoever without the written permission of NICHOLS, MELBURG and ROSSETTO.

NICHOLS MELBURG & ROSSETTO
ARCHITECTS + ENGINEERS
300 KNOLLCREST DRIVE
REDDING, CA. 96002
(530) 222-3300 (530) 222-3538 FAX
http://www.nmrdesign.com

CONSULTANTS

Robertson Erickson
CIVIL ENGINEERS & SURVEYORS
888 Manzanita Court
Suite 101
Chico, California 95926
530-894-3500 Fax 530-894-8955
robertsonerickson.com

LICENSE STAMPS

REGISTERED PROFESSIONAL ENGINEER
RUSSELL E. ERICKSON
No. 58460
CIVIL
STATE OF CALIFORNIA

02/18/2025

PROJECT NAME

TEHAMA COUNTY
CORNING
VETERAN'S HALL

1620 SOLANO ST.
CORNING, CA

SHEET TITLE

GRADING PLAN

DRAWING STATUS

CONSTRUCTION DOCUMENTS

REVISIONS

Sym.	Description	Date

Drawn By	KMJ
Date Issued	2/13/2025
Scale	AS INDICATED
Project No.	21-6497

SHEET No.

C3.0

Login Name: kaseyn
Plot Date: February 13, 2025 - 10:57 am
File Name: K:\Projects\24-531 NMR Corning Veteran's Hall\Plan Sheets\C3.0 Grading Plan Veterans Hall.dwg
XREFS: Title Block Veterans Hall | x-CVH_Title Block | Civil Base 24-531 Veterans Hall | 24-531 nmr vet Topo CAD | x-CVH-site | x-CVH-flr1 | x-CVH-GRID

UTILITY CONSTRUCTION NOTES

1. INSTALL JENSON PRE-CAST 1000-GALLON GREASE INTERCEPTOR WITH AIR TIGHT LIDS. SEE C6.1/4 FOR DETAILS.
2. CONNECT NEW SANITARY SEWER LINE TO EXISTING 10" MAIN. COORDINATE WITH CITY. SEE C6.1/2 FOR TIE IN DETAILS. POTHOLE TO VERIFY DEPTH AND LOCATION PRIOR TO CONSTRUCTION.
3. INSTALL SANITARY SEWER CLEANOUT. SEE C6.1/1 FOR DETAIL.
4. INSTALL SANITARY SEWER PIPE. SEE PLAN FOR SIZE AND SLOPE. SEE C6.1/3 FOR TRENCH DETAILS.
5. MOVE OR REPLACE EXISTING 2" WATER METER AND SERVICE SO METER IS IN RIGHT OF WAY. COORDINATE WITH CITY OF CORNING AND WATER SERVICE PROVIDER FOR CONNECTION.
6. INSTALL NEW 2" IRRIGATION SERVICE, METER, AND BACKFLOW PREVENTOR. COORDINATE WITH CITY OF CORNING FOR CONNECTION APPLICATION AND PROCEDURES.
7. INSTALL NEW DOMESTIC BACKFLOW PREVENTOR.
8. INSTALL NEW 2" WATER LINE. SEE C6.1/3 FOR TRENCH DETAILS.
9. REPLACE EXISTING 4" RWL'S, USE 3" PIPES UNDER SIDEWALK TO DAYLIGHT AT GUTTER FLOW LINE. PROVIDE WELDED WIRE MESH OVER PIPE. SEE C6.0/8 FOR DETAIL.
10. INSTALL CITY OF CORNING CLEANOUT. SEE C6.1/2 FOR STANDARD DETAILS.

10 0 10 20 30

SCALE: 1" =10'

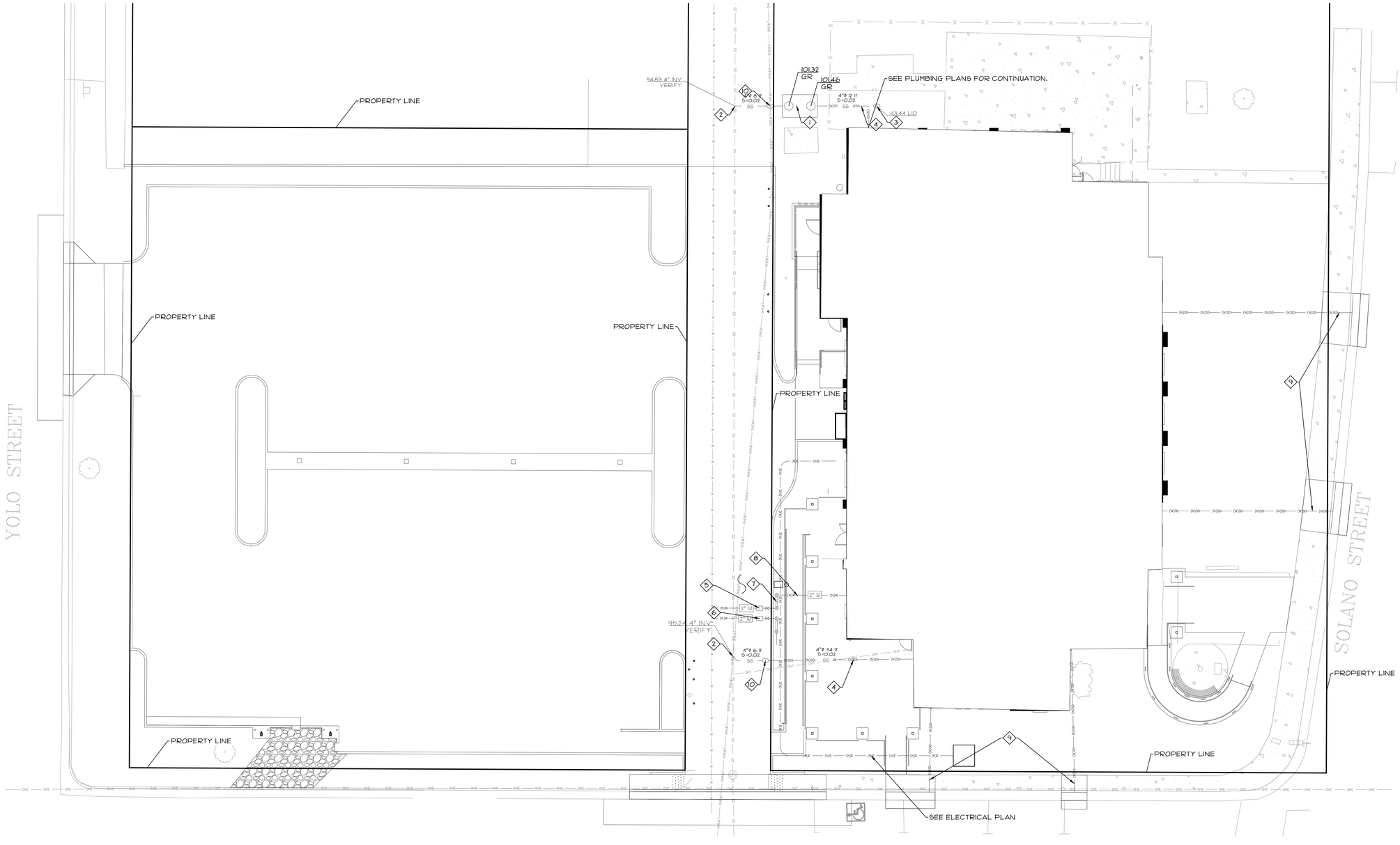

Copyright © 2025

All ideas, designs, arrangements and plans indicated or represented by this drawing are owned by, and the property of, NICHOLS, MELBURG and ROSSETTO and were created, evolved and developed for use on, and in conjunction with, the specified project. None of such ideas, designs, arrangements or plans shall be used by, or disclosed to any person, firm or corporation for any purpose whatsoever without the written permission of NICHOLS, MELBURG and ROSSETTO.

NICHOLS MELBURG & ROSSETTO
ARCHITECTS + ENGINEERS
300 KNOLLCREST DRIVE
REDDING, CA. 96002
(530) 222-3300 (530) 222-3538 FAX
http://www.nmrdesign.com

CONSULTANTS

Robertson Erickson
CIVIL ENGINEERS & SURVEYORS
888 Manzanita Court
Suite 101
Chico, California 95926
530-894-3500 Fax 530-894-8955
robertsonerickson.com

LICENSE STAMPS

REGISTERED PROFESSIONAL ENGINEER
RUSSELL T. ERICKSON
No. 58460
CIVIL
STATE OF CALIFORNIA

02/18/2025

PROJECT NAME

TEHAMA COUNTY
CORNING
VETERAN'S HALL

1620 SOLANO ST.
CORNING, CA

SHEET TITLE

UTILITY PLAN

DRAWING STATUS

CONSTRUCTION DOCUMENTS

REVISIONS

Sym.	Description	Date

Drawn By	KMJ
Date Issued	2/13/2025
Scale	1" = 10'
Project No.	21-6497

SHEET No.

C4.0

Login Name: kenny
Plot Date: February 13, 2025 – 10:57 am
File Name: K:\Projects\24-531 NMR Corning Veteran's Hall\Plan Sheets\C4.0 Utility Plan Veterans Hall.dwg
XREFS: Title Block Veterans Hall | x-CVH_Title Block | Civil Base 24-531 Veterans Hall | 24-531 nmr vet Topo CAD | x-CVH-site | x-CVH-flr1 | x-CVH-GRID

LEGEND:

- LIGHT DUTY CONCRETE SIDEWALK AREA 4" CONCRETE OVER 4" OR CLASS II AB @ 95% R.D. OVER 12" SUBGRADE @ 95% R.D.
- ASPHALT CONCRETE PAVING SECTION 3" AC OVER 8" CLASS II AB @ 95% R.D. OVER 12" SUBGRADE @ 95% R.D.
- HEAVY DUTY CONCRETE 6" CONCRETE WITH #4 REBAR AT 18" O.C. IN EACH DIRECTION OVER 4" CLASS II AB @ 95% R.D. OVER 12" SUBGRADE @ 95% R.D.
- NEW SIDEWALK AREA. SEE C6.0/6 FOR CITY OF CORNING SIDEWALK CROSS SECTIONAL DETAIL.
- NEW DRIVEWAY AREA. SEE C6.0/7 FOR CITY OF CORNING DRIVEWAY CROSS SECTION DETAIL.
- NEW CITY OF CORNING STREET ASPHALT. 2" ASPHALT CONCRETE TYPE 'B' OVER 8" CLASS II AB @95% R.D. OVER 12" SUBGRADE @ 95% R.D.
- 6" VERTICAL CURB AND GUTTER. SEE C6.0/2 FOR DETAILS.
- 0"-6" VERTICAL CURB. SEE GRADING PLAN C3.0 FOR CURB HEIGHT. SEE C6.0/1 FOR DETAILS.
- 6" VERTICAL CURB AND GUTTER IN RIGHT-OF-WAY. SEE C6.0/6 FOR CITY DETAIL.

10 0 10 20 30

SCALE: 1" =10'

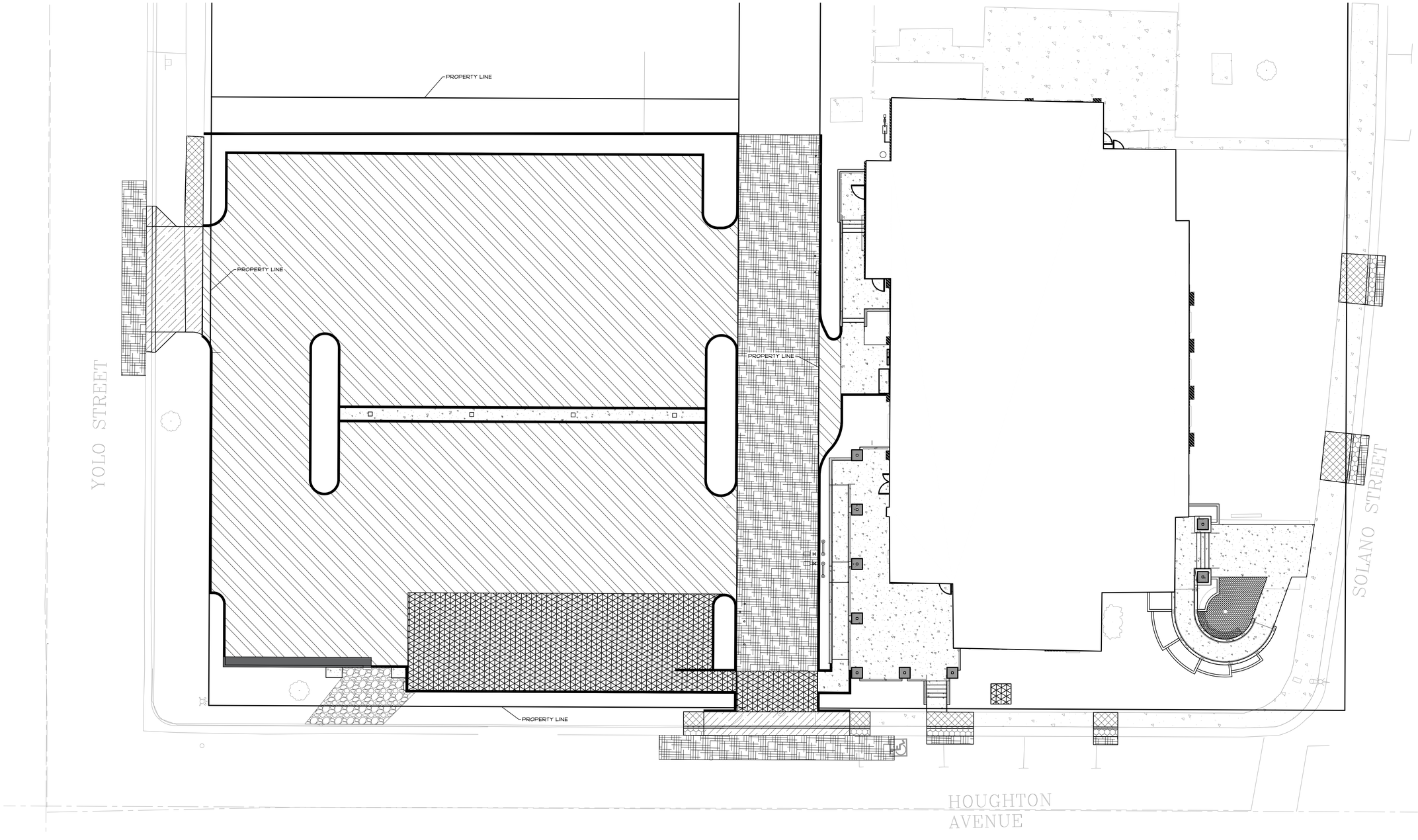

Copyright © 2025

All ideas, designs, arrangements and plans indicated or represented by this drawing are owned by, and the property of, NICHOLS, MELBURG and ROSSETTO and were created, evolved and developed for use on, and in conjunction with, the specified project. None of such ideas, designs, arrangements or plans shall be used by, or disclosed to any person, firm or corporation for any purpose whatsoever without the written permission of NICHOLS, MELBURG and ROSSETTO.

NICHOLS MELBURG ROSSETTO
ARCHITECTS + ENGINEERS
300 KNOLLCREST DRIVE
REDDING, CA. 96002
(530) 222-3300 (530) 222-3538 FAX
http://www.nmrdesign.com

CONSULTANTS

Robertson Erickson
CIVIL ENGINEERS & SURVEYORS
888 Manzanita Court
Suite 101
Chico, California 95926
530-894-3500 Fax 530-894-8955
robertsonerickson.com

LICENSE STAMPS

REGISTERED PROFESSIONAL ENGINEER
RUSSELL E. ERICKSON
No. 58460
CIVIL
STATE OF CALIFORNIA

02/18/2025

PROJECT NAME

TEHAMA COUNTY
CORNING
VETERAN'S HALL

1620 SOLANO ST.
CORNING, CA

SHEET TITLE

PAVING PLAN

DRAWING STATUS

CONSTRUCTION DOCUMENTS

REVISIONS

Sym.	Description	Date

Drawn By	KMJ
Date Issued	2/13/2025
Scale	AS INDICATED
Project No.	21-6497

SHEET No.

C5.0

Login Name: keenan
Plot Date: February 13, 2025 - 10:57 am
File Name: K:\Projects\24-531 NMR Corning Veteran's Hall\Plan Sheets\C5.0 Paving Plan Veterans Hall.dwg
XREFS: Title Block Veterans Hall | x-CVH_Title Block | Civil Base 24-531 Veterans Hall | 24-531 nmr vet Topo CAD | x-CVH-site | x-CVH-flr1 | x-CVH-GRID

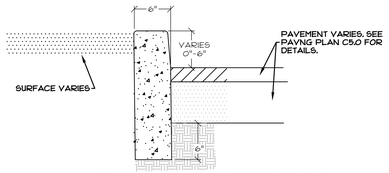

CURB & PAVEMENT SECTION (1)
NTS

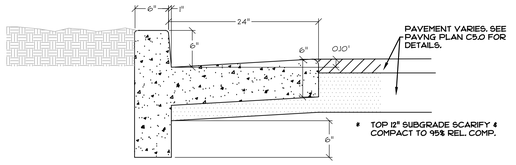

VERTICAL CURB & GUTTER SECTION (2)
NTS

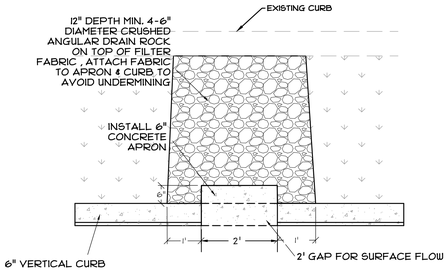

CURB GAP WITH ENERGY DISSIPATION (3)
NTS

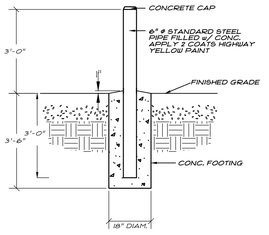

PIPE BOLLARD DETAIL (4)
NTS

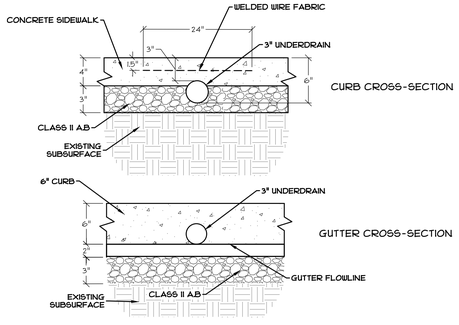

UNDER-SIDEWALK DRAIN (8)
NTS

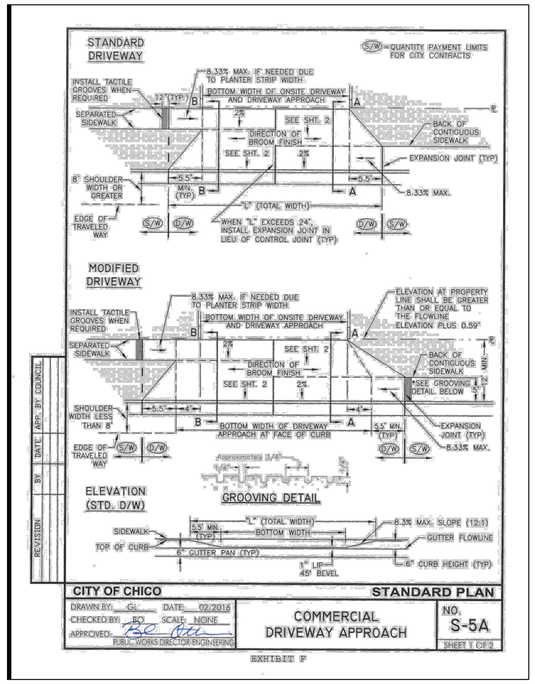

COMMERCIAL DRIVEWAY APPROACH (5)
NTS

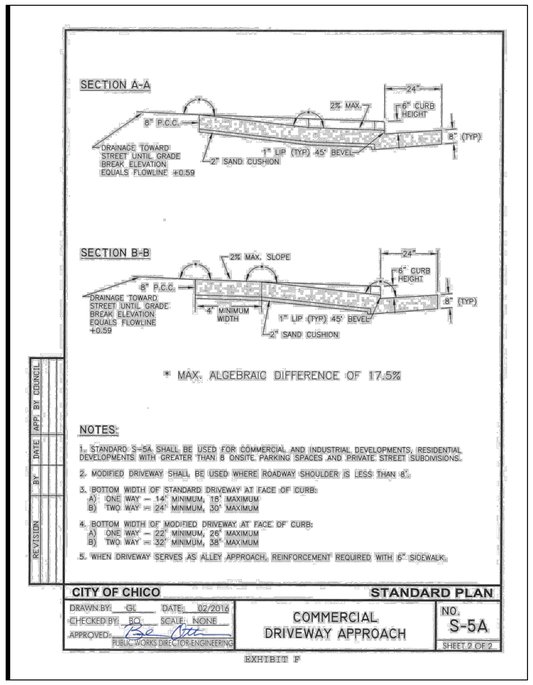

COMMERCIAL DRIVEWAY APPROACH (5)
NTS

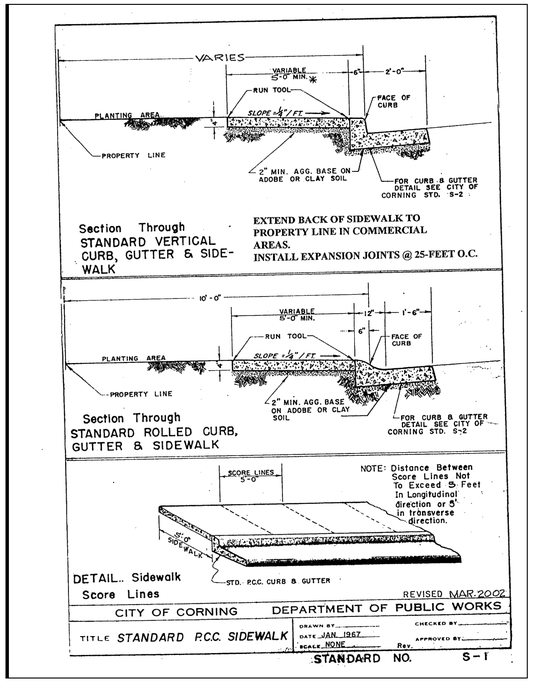

CITY OF CORNING STANDARD SIDEWALK (6)
NTS

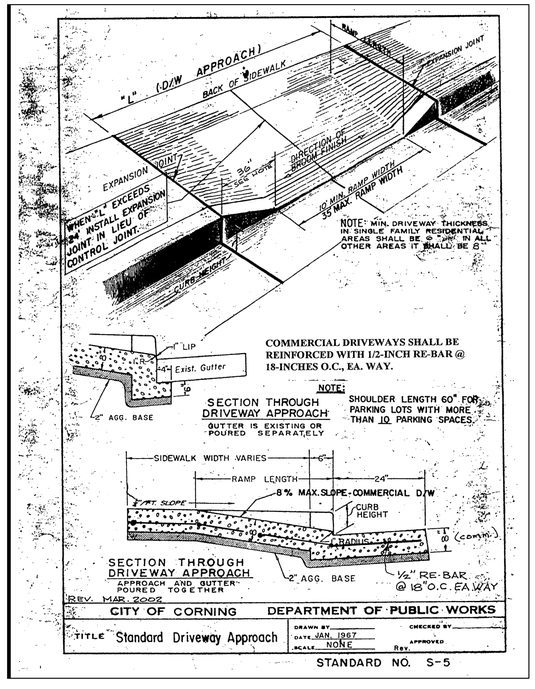

CITY OF CORNING STANDARD DRIVEWAY (7)
NTS

Copyright © 2025
All ideas, designs, arrangements and plans indicated or represented by this drawing are owned by, and the property of, NICHOLS, MELBURG and ROSSETTO and were created, evolved and developed for use on, and in conjunction with, the specified project. None of such ideas, designs, arrangements or plans shall be used by, or disclosed to any person, firm or corporation for any purpose whatsoever without the written permission of NICHOLS, MELBURG and ROSSETTO.

NICHOLS MELBURG & ROSSETTO
ARCHITECTS + ENGINEERS
300 KNOLLCREST DRIVE
REDDING, CA. 96002
(530) 222-3300 (530) 222-3538 FAX
http://www.nmrdesign.com

CONSULTANTS

Robertson Erickson
CIVIL ENGINEERS & SURVEYORS
888 Manzanita Court
Suite 101
Chico, California 95926
530-894-3500 Fax 530-894-8955
robertsonerickson.com

LICENSE STAMPS

REGISTERED PROFESSIONAL ENGINEER
RUSSELL E. ERICKSON
No. 58460
CIVIL
STATE OF CALIFORNIA

02/18/2025

PROJECT NAME

TEHAMA COUNTY
CORNING
VETERAN'S HALL

1620 SOLANO ST.
CORNING, CA

SHEET TITLE

DETAIL SHEET

DRAWING STATUS

CONSTRUCTION DOCUMENTS

REVISIONS

Sym.	Description	Date

Drawn By	KMJ
Date Issued	2/13/2025
Scale	AS INDICATED
Project No.	21-6497

SHEET No.

C6.0

Login Name: kenny
Plot Date: January 13, 2025 - 10:58 am
File Name: K:\Projects\24-531 NMR Corning Veteran's Hall\Plan Sheets\C6.0 Detail Sheet Veterans Hall.dwg
XREFS: Title Block Veterans Hall | x-CVL_Title Block

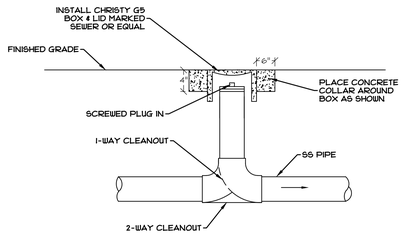

NEW SEWER CLEANOUT (1)

NTS

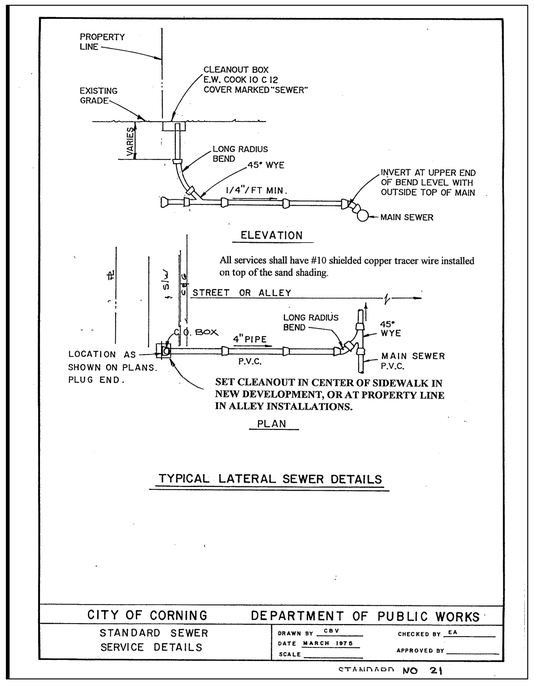

CITY OF CORNING SEWER CONNECTION (2)

NTS

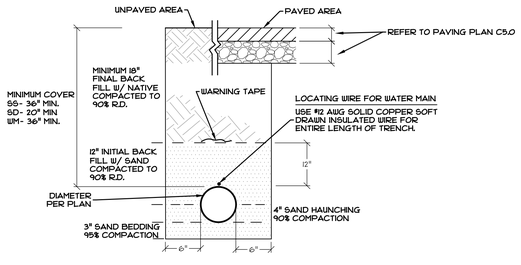

UTILITY TRENCH (TYPICAL) (3)

NTS

NOTES

- IN COMPLIANCE WITH UNIFORM PLUMBING CODE (UPC), INTERNATIONAL PLUMBING CODE (IPC), AND STRUCTURAL LOADING REQUIREMENTS OF ASTM INTERNATIONAL C1613.
- JENSEN PRECAST'S PRODUCT IS LISTED BY IAPMO R&T TO STANDARD Z1001. MODEL JP-1000-EE-G
- MUST BE INSTALLED PER "JENSEN PRECAST UNDERGROUND WASTEWATER PRECAST CONCRETE TANK INSTALLATION PROCEDURE" WHICH CAN BE FOUND AT https://www.jensenprecast.com/Tank-Installation-Procedure-d2106.pdf. THIS PROCEDURE ADDRESSES REQUIRED EXCAVATION, SITE PREPARATION, INSTALLATION, VENTILATION, AND WATER/VACCUM TESTING

BILL OF MATERIALS

ITEM	QTY	PART NUMBER	DESCRIPTION	WEIGHT (LBS)
1	1	200017789	Tank JP 1000 Gallon 4 Inch Assembly EE Single Baffle	11657
2	1	200048772	200030233 Plumbing - JP 1000 4 Inch Gravity Grease Interceptor 24"E, 24"E Single Baffle	10
3	JOB SPECIFIC	100005850	CI RINGCOVER 24DIA B-5105-02/B-5105-R2 ASTM A48 CL35B CP O-RING GASKET OSI JENSEN/INTERCEPT	196
4	JOB SPECIFIC	100001524	Grade Ring D2432x3	87
5	JOB SPECIFIC	100001525	Grade Ring D2432x6	180
6	JOB SPECIFIC	100001526	Grade Ring D2432x12	365
7	JOB SPECIFIC	100012046	Plug Cover D2428x6 Slab Top	300

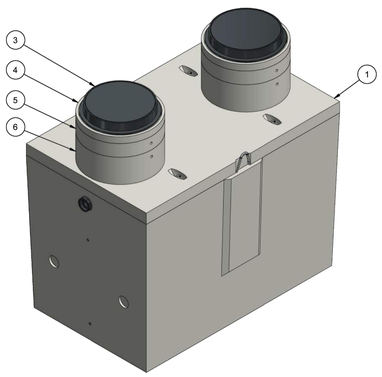

ISO LAYOUT

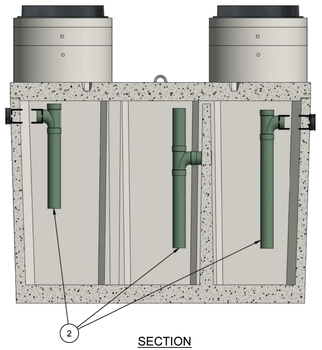

SECTION

MODEL: JP-1000-EE-G

REVISION HISTORY			
REV	DESCRIPTION	DATE	BY
A	DRAWING CREATED	10/4/2019	J HILLMAN
B	TOP SLAB LIFTING AND PLUMBING UPDATED	2/4/2021	C.Keller
C	ACCESSORIES UPDATED	6/29/2022	E.FINE

BURY DEPTH:	1.1' - 6.0' to Top		
WATER LEVEL:	Below Structure	WEIGHT:	13622.86 Lbs
DESIGN SPEC:	ASTM C890,ACI 318	LOADING SPEC:	A-16 (AASHTO HS20-44)
REINFORCEMENT TYPE:		LIFTING TYPE:	

JENSEN PRECAST EST. 1968 WWW.JENSENPRECAST.COM

©2018 Jensen Precast- All rights reserved. All materials appearing on Jensen Precast documents and the like are proprietary work product and are protected under U.S. copyright and other laws. Unless in conjunction with business conducted with Jensen Precast, any use of Jensen Precast work product without express, written consent is prohibited, and recipient is prohibited from distributing any and all work product to non-approved third parties under penalty of civil action.

DESCRIPTION:	Tank JP 1000 Gallon 4 Inch Layout Gravity Grease Interceptor 24"E, 24"E Single Baffle		REV: C-2
	LAYOUT REVIEW		SHEET: 1 OF 2
PART NUMBER: 200030233	DRAWN BY: E. Fine		
CREATED: 1/31/2019	MODIFIED: 6/29/2022		

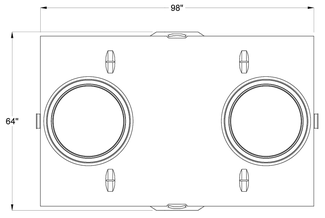

PLAN VIEW

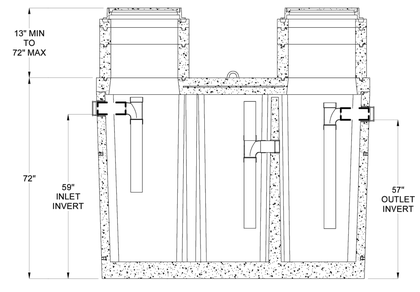

CROSS SECTION

BURY DEPTH:	1.1' - 6.0' to Top		
WATER LEVEL:	Below Structure	WEIGHT:	13622.86 Lbs
DESIGN SPEC:	ASTM C890,ACI 318	LOADING SPEC:	A-16 (AASHTO HS20-44)
REINFORCEMENT TYPE:		LIFTING TYPE:	

JENSEN PRECAST EST. 1968 WWW.JENSENPRECAST.COM

©2018 Jensen Precast- All rights reserved. All materials appearing on Jensen Precast documents and the like are proprietary work product and are protected under U.S. copyright and other laws. Unless in conjunction with business conducted with Jensen Precast, any use of Jensen Precast work product without express, written consent is prohibited, and recipient is prohibited from distributing any and all work product to non-approved third parties under penalty of civil action.

DESCRIPTION:	Tank JP 1000 Gallon 4 Inch Layout Gravity Grease Interceptor 24"E, 24"E Single Baffle		REV: C-2
	LAYOUT DRAWING		SHEET: 2 OF 2
PART NUMBER: 200030233	DRAWN BY: E. Fine		
CREATED: 1/31/2019	MODIFIED: 6/29/2022		

JENSON PRECAST 1000-GAL GREASE INTERCEPTOR (4)

NTS

Copyright © 2025

All ideas, designs, arrangements and plans indicated or represented by this drawing are owned by, and the property of, NICHOLS, MELBURG and ROSSETTO and were created, evolved and developed for use on, and in conjunction with, the specified project. None of such ideas, designs, arrangements or plans shall be used by, or disclosed to any person, firm or corporation for any purpose whatsoever without the written permission of NICHOLS, MELBURG and ROSSETTO.

NICHOLS MELBURG & ROSSETTO
ARCHITECTS + ENGINEERS
300 KNOLLCREST DRIVE
REDDING, CA 96002
(530) 222-3300 (530) 222-3538 FAX
http://www.nmrdesign.com

CONSULTANTS

Robertson Erickson
CIVIL ENGINEERS & SURVEYORS
888 Manzanita Court
Suite 101
Chico, California 95926
530-894-3500 Fax 530-894-8955
robertsonerickson.com

LICENSE STAMPS

REGISTERED PROFESSIONAL ENGINEER RUSSELL E. ERICKSON No. 58460 CIVIL STATE OF CALIFORNIA

02/18/2025

PROJECT NAME

TEHAMA COUNTY
CORNING
VETERAN'S HALL

1620 SOLANO ST.
CORNING, CA

SHEET TITLE

DETAIL SHEET

DRAWING STATUS

CONSTRUCTION DOCUMENTS

REVISIONS

Sym.	Description	Date

Drawn By	KMJ
Date Issued	2/13/2025
Scale	AS INDICATED
Project No.	21-6497

SHEET No.

C6.1

Login Name: kenny
Plot Date: February 13, 2025 – 10:58 am
File Name: K:\Projects\24-531 NMR Corning Veteran's Hall\Plan Sheets\C6.0 Detail Sheet Veterans Hall.dwg
XREFS: Title Block Veterans Hall | x-CVH_Title Block

GENERAL NOTES:

THESE BEST MANAGEMENT PRACTICES ARE SUGGESTIONS ONLY. IT IS UP TO THE CONTRACTOR IN CHARGE OF IMPLEMENTING THE EROSION & SEDIMENT CONTROL PLAN TO ENSURE THE ESCP AND ASSOCIATED BMP's ARE UP TO DATE. AS CONDITIONS CHANGE, BMP's SHOULD BE MODIFIED AND/OR UPDATED ACCORDINGLY.

STOCKPILES ARE TO BE COVERED WITH A TARP, EROSION CONTROL MATS, OR STRAW/TACKIFIER IF EXPOSED MORE THAN THAN 14 DAYS.

PLACE STRAW MULCH W/ TACKIFIER OR EROSION CONTROL MATS ON ALL CUT/FILL SLOPES IF EXPOSED DURING RAIN EVENTS.

USE WATER TRUCK AS NECESSARY TO MINIMIZE DUST.

DURING CONSTRUCTION ACTIVITIES ALL STREETS ADJACENT TO THIS SITE SHALL BE KEPT CLEAN AND FREE OF DIRT AND DEBRIS. STREET CLEANING SHALL OCCUR DAILY UNLESS DETERMINED TO BE NEEDED MORE FREQUENTLY OR LESS FREQUENTLY BY THE CITY. INSPECT ACCESS STREETS & DRIVEWAYS DAILY.

DUST CONTROL MEASURES:

1. THE CONTRACTOR SHALL BE RESPONSIBLE FOR ENSURING THAT ALL ADEQUATE DUST CONTROL MEASURES ARE IMPLEMENTED IN A TIMELY AND EFFECTIVE MANNER DURING ALL PHASES OF PROJECT DEVELOPMENT AND CONSTRUCTION.
2. ALL MATERIAL EXCAVATED, STOCKPILED, OR GRADED SHOULD BE SUFFICIENTLY WATERED TO PREVENT FUGITIVE DUST FROM LEAVING PROPERTY BOUNDARIES AND CAUSING A PUBLIC NUISANCE OR A VIOLATION OF AN AMBIENT AIR STANDARD. WATERING SHOULD OCCUR AT LEAST TWICE DAILY WITH COMPLETE SITE COVERAGE, PREFERABLY IN THE MID-MORNING AND AFTER WORK IS COMPLETED EACH DAY.
3. ALL AREAS (INCLUDING UNPAVED ROADS) WITH VEHICLE TRAFFIC SHOULD BE WATERED PERIODICALLY OR HAVE DUST PALLIATIVES APPLIED FOR STABILIZATION OF DUST EMISSIONS.
4. ALL ON SITE VEHICLES SHOULD BE LIMITED TO A SPEED OF 15 MILES PER HOUR ON UNPAVED ROADS.
5. ALL LAND CLEARING, GRADING EARTH MOVING OR EXCAVATION ACTIVITIES ON A PROJECT SHALL BE SUSPENDED WHEN WINDS ARE EXPECTED TO EXCEED 20 MILES PER HOUR.
6. ALL INACTIVE PORTIONS OF THE DEVELOPMENT SITE SHOULD BE SEEDED AND WATERED UNTIL A SUITABLE LANDSCAPE COVER IS ESTABLISHED.

LEGEND

	STABILIZED CONSTRUCTION ENTRANCE (SE)
	DRAINAGE PATTERNS
	SILT FENCE OR STRAW ROLLS (ADJUST TO SUIT FIELD CONDITIONS)
	LIMITS OF CONSTRUCTION
SE	STABILIZED ENTRANCE
LS	LANDSCAPE
PV	PAVEMENT AREA
SF/SR	SILT FENCE/STRAW ROLLS
CW	CONCRETE WASHOUT
BLDG	BUILDING AREA

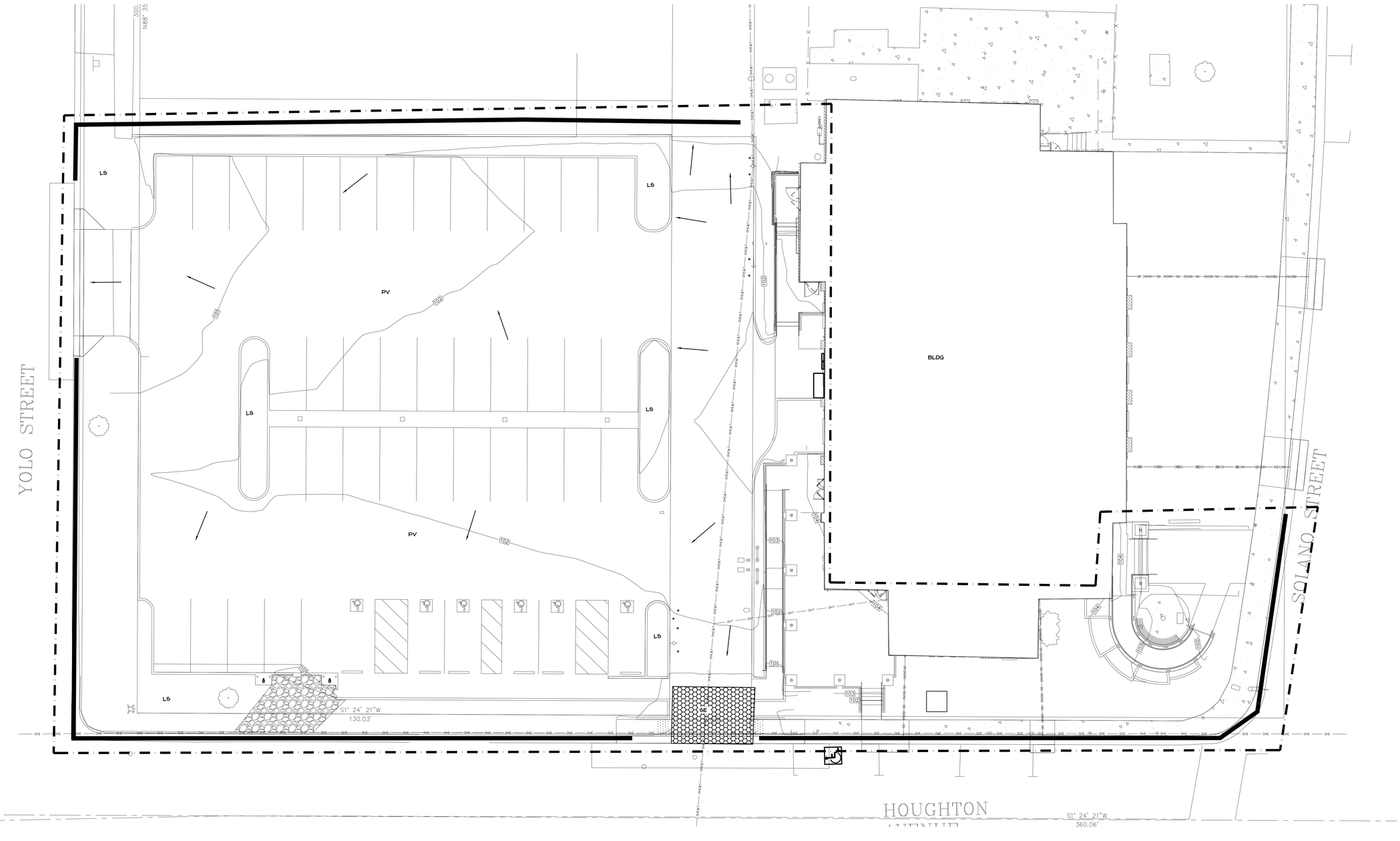

10 0 10 20 30
SCALE: 1" =10'

Copyright © 2025
All ideas, designs, arrangements and plans indicated or represented by this drawing are owned by, and the property of, NICHOLS, MELBURG and ROSSETTO and were created, evolved and developed for use on, and in conjunction with, the specified project. None of such ideas, designs, arrangements or plans shall be used by, or disclosed to any person, firm or corporation for any purpose whatsoever without the written permission of NICHOLS, MELBURG and ROSSETTO.

NICHOLS MELBURG & ROSSETTO
ARCHITECTS + ENGINEERS
300 KNOLLCREST DRIVE
REDDING, CA. 96002
(530) 222-3300 (530) 222-3538 FAX
http://www.nmrdesign.com

CONSULTANTS

Robertson Erickson
CIVIL ENGINEERS & SURVEYORS
888 Manzanita Court
Suite 101
Chico, California 95926
530-894-3500 Fax 530-894-8955
robertsonerickson.com

LICENSE STAMPS

REGISTERED PROFESSIONAL ENGINEER
RUSSELL T. ERICKSON
No. 58460
CIVIL
STATE OF CALIFORNIA

02/18/2025

PROJECT NAME

TEHAMA COUNTY
CORNING
VETERAN'S HALL

1620 SOLANO ST.
CORNING, CA

SHEET TITLE

EROSION AND SEDIMENT CONTROL PLAN

DRAWING STATUS

CONSTRUCTION DOCUMENTS

REVISIONS

Sym.	Description	Date

Drawn By	KMJ
Date Issued	2/13/2025
Scale	AS INDICATED
Project No.	21-6497

SHEET No.

C7.0

Login Name: kenny
Plot Date: February 13, 2025 - 10:58 am
File Name: K:\Projects\24-531 NMR Corning Veteran's Hall\Plan Sheets\C7.0 ESCP Veterans Hall.dwg
PREFS: Civil Base 24-531 Veterans Hall | 24-531 nmr vet Topo CAD | x-CVH-site | x-CVH-fir1 | x-CVH-GRID | Title Block Veterans Hall | x-CVH_Title Block

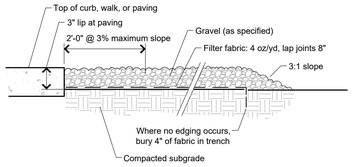

3 L1 Typical Gravel Section
Not to Scale

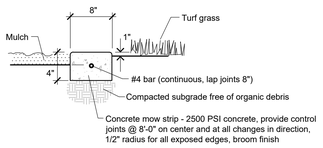

4 L1 Concrete Mow Strip
Not to Scale

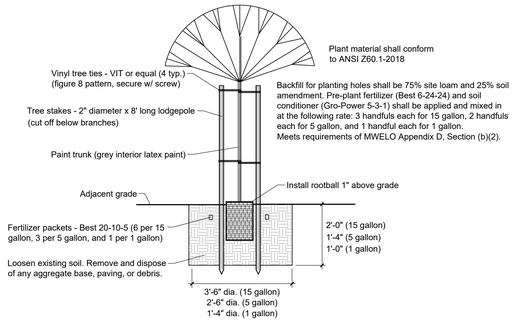

Typical Planter Detail
(Gravel Areas)
2 L1 Not to Scale

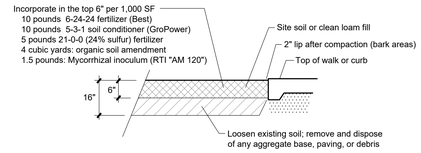

Typical Planter Section
(Turf and Bark Areas)
1 L1 Not to Scale

PLANT SCHEDULE					
CODE	QTY	SIZE	BOTANICAL NAME	COMMON NAME	REMARKS
AG	7	5 gal.	Abelia x grandiflora 'Prostrata'	Prostrate Glossy Abelia	
CT	5	15 gal.	Chitalpa tashkentensis	Chitalpa	double stake
DI	7	5 gal.	Dietes iridioides	Fortnight Lily	
JC	4	5 gal.	Juniperus chinensis 'Armstrongii'	Armstrong Juniper	
LL	48	1 gal.	Lomandra longifolia 'LM600'	Baby Breeze Mat Rush	
MR	20	1 gal.	Muhlenbergia rigens	Deer Grass	
ND	17	5 gal.	Nandina domestica 'Gulf Stream'	Gulf Stream Heavenly Bamboo	
PC	5	15 gal.	Pistacia chinensis 'Keith Davey'	Chinese Pistache	double stake
RI	7	5 gal.	Rhaphiolepis indica 'Clara'	Clara Indian Hawthorn	
RF	10	5 gal.	Rosa x 'Noare'	Flower Carpet Red Groundcover Rose	
RO	26	1 gal.	Rosmarinus officinalis 'Huntington Carpet'	Huntington Carpet Rosemary	
MISCELLANEOUS					
	1,110 sf	Bark (Fir Walk on Bark) - 3" deep over pre-emergent herbicide			
	4,930 sf	Gravel (3/4" clean crushed stone, no fines) - 3" deep over filter fabric (4 oz/yd)			
sod	560 sf	Turf (Improved Hybrid Bermuda grass) - verify type with Owner			
	203 lf	Mow strip (concrete, 8" wide) - see 4/L1			

Total landscape area: 6,600 square feet
Total irrigated landscape area: 3,590 square feet

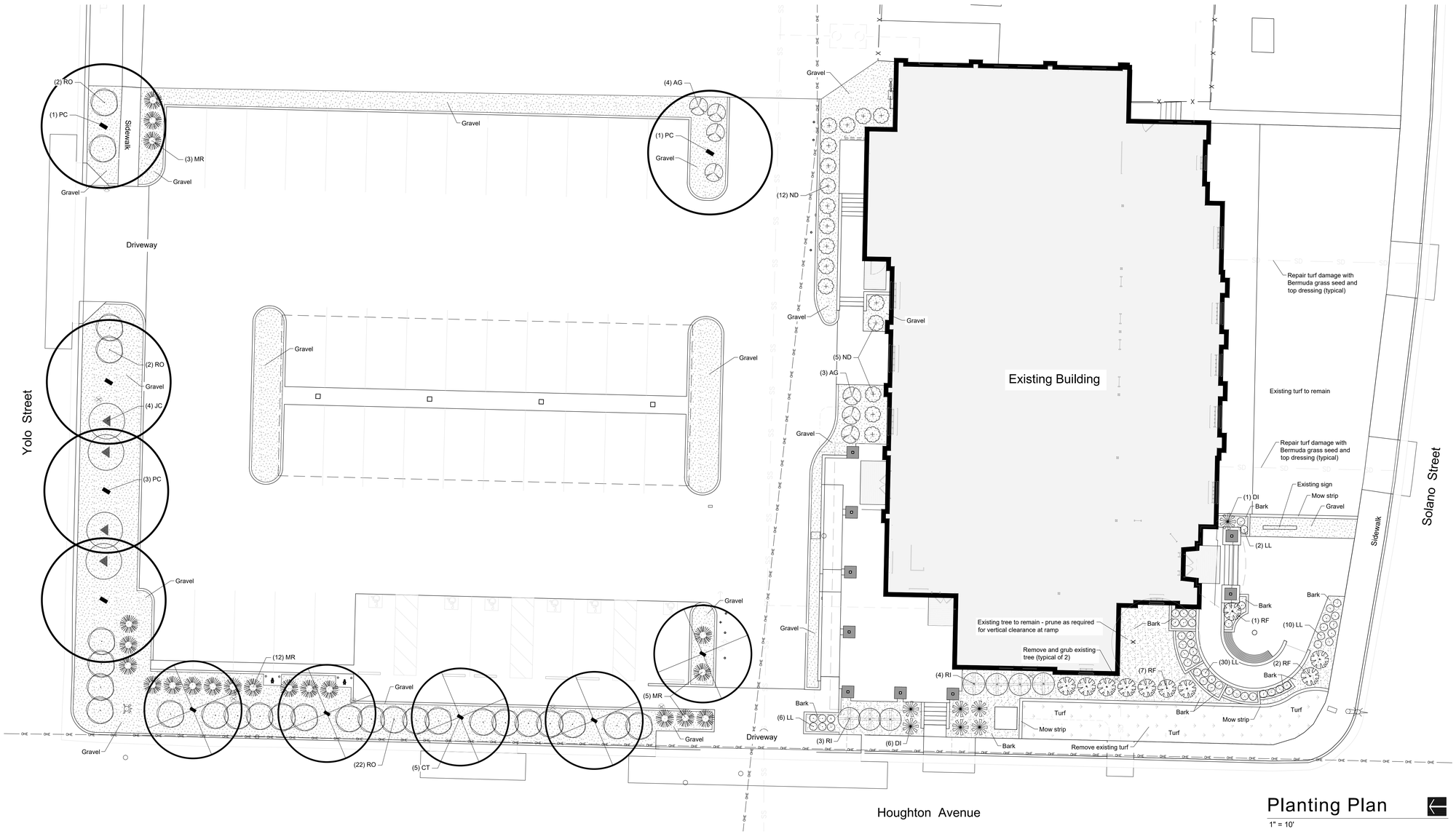

Planting Plan
1" = 10'

Copyright ©

All ideas, designs, arrangements and plans indicated or represented by this drawing are owned by, and the property of, NICHOLS, MELBURG and ROSSETTO and were created, evolved and developed for use on, and in conjunction with, the specified project. None of such ideas, designs, arrangements and plans shall be used by or disclosed to any person, firm or corporation for any purpose whatsoever without the written permission of NICHOLS, MELBURG and ROSSETTO.

NICHOLS MELBURG ROSSETTO
ARCHITECTS • ENGINEERS
300 KNOLLCREST DRIVE
REDDING, CA. 96002
(530) 222-3300 (530) 222-3538 FAX
http://www.nmrdesign.com

CONSULTANTS

Michael Lander ASLA
Landscape Architecture
RLA 2399
20270 Lupine Drive Redding, California 96002
(530) 223-2488 mlander@shasta.com

LICENSE STAMPS

REGISTERED LANDSCAPE ARCHITECT
MICHAEL J. LANDER
2399
2-15-25
Exp: 12/31/25
STATE OF CALIFORNIA

PROJECT NAME

TEHAMA COUNTY
CORNING
VETERAN'S HALL

1820 SOLANO ST.
CORNING, CA

SHEET TITLE

PLANTING PLAN

DRAWING STATUS

CONSTRUCTION DOCUMENTS

REVISIONS

Sym.	Description	Date

Drawn By	ML
Date Issued	2/13/2025
Scale	1"=10'
Project No.	21-6497

SHEET No.

L1

Irrigation Schedule

Symbol	Description	Make/Model	Remarks
W	1" Water meter (irrigation meter)		see Civil Drawings
	1" Reduced pressure assembly and freeze blanket		see 1/L3
	Valve assembly - SCH 40 ball valve, 1" electric valve, 1" pressure regulating filter (200 mesh, 40 psi outlet)	Rainbird 100-DVF valve, PRB-100 filter	see 2/L3, filter not required on spray circuits
	Existing electric valve to remain		connect to new irrigation mainline and control wires
	Ball valve (SCH 40 PVC)		see 3/L3, line size
	3/4" Quick coupler valve with locking cover & swivel key	Rainbird 3-RC with 33K key & SH-1 swivel	see 4/L3
	Sprinkler - 4" pop-up, PSI reg., adjustable arc, 10' radius	Rainbird 1804PRS and HE-VAN-10 nozzle	see 5/L3
	5/8" Drip tubing and pressure compensating emitters with check valve	Rainbird XBS polyethylene tubing and XBCV-20PC PC / XBCV-05 PC emitters	see 6/L3 and Emitter Schedule below, surface installation, cover with mulch
	PVC to drip tubing adapter		see 7/L3
	Flush end		figure 8 clamp
	Drip System Operation Indicator (8" height, 1/2" MPT)	DIG "DSPI-08"	install per manufacturer's instructions, 1 per circuit
	Mainline - Schedule 40 PVC Pipe		1-1/4" if not sized on plan
	Lateral - Schedule 40 PVC Pipe		3/4" if not sized on plan
	Sleeve - 3" PVC Pipe		see 8/L3, install 1 sleeve unless noted on plan
	SCH 40 PVC conduit with control wires		size as needed
C *	Irrigation Controller - outdoor case, 6 station, wireless weather sensor, receiver, and guard	Hunter XC-600 controller, WSS-SEN sensor/receiver and WR-GUARD	see 9/L3, exterior wall mount, verify location and power in field, install sensor on solar structure (verify)

Irrigation system is designed for a maximum flow rate of 13 GPM and a minimum static pressure of 55 PSI. If flow or pressure differ by more than 10%, contact Landscape Architect.

Irrigation plan is diagrammatic. Install all irrigation components in landscape areas.

Water source: potable, City of Corning

Emitter Schedule
15 gallon (5) 2.0 GPH emitters
5 gallon (2) 2.0 GPH emitters
1 gallon (2) 1.0 GPH emitter

Valve size — A3 — Program Station number; 1" — 5 — GPM; AR 0.5 — Application rate (inches per hour)

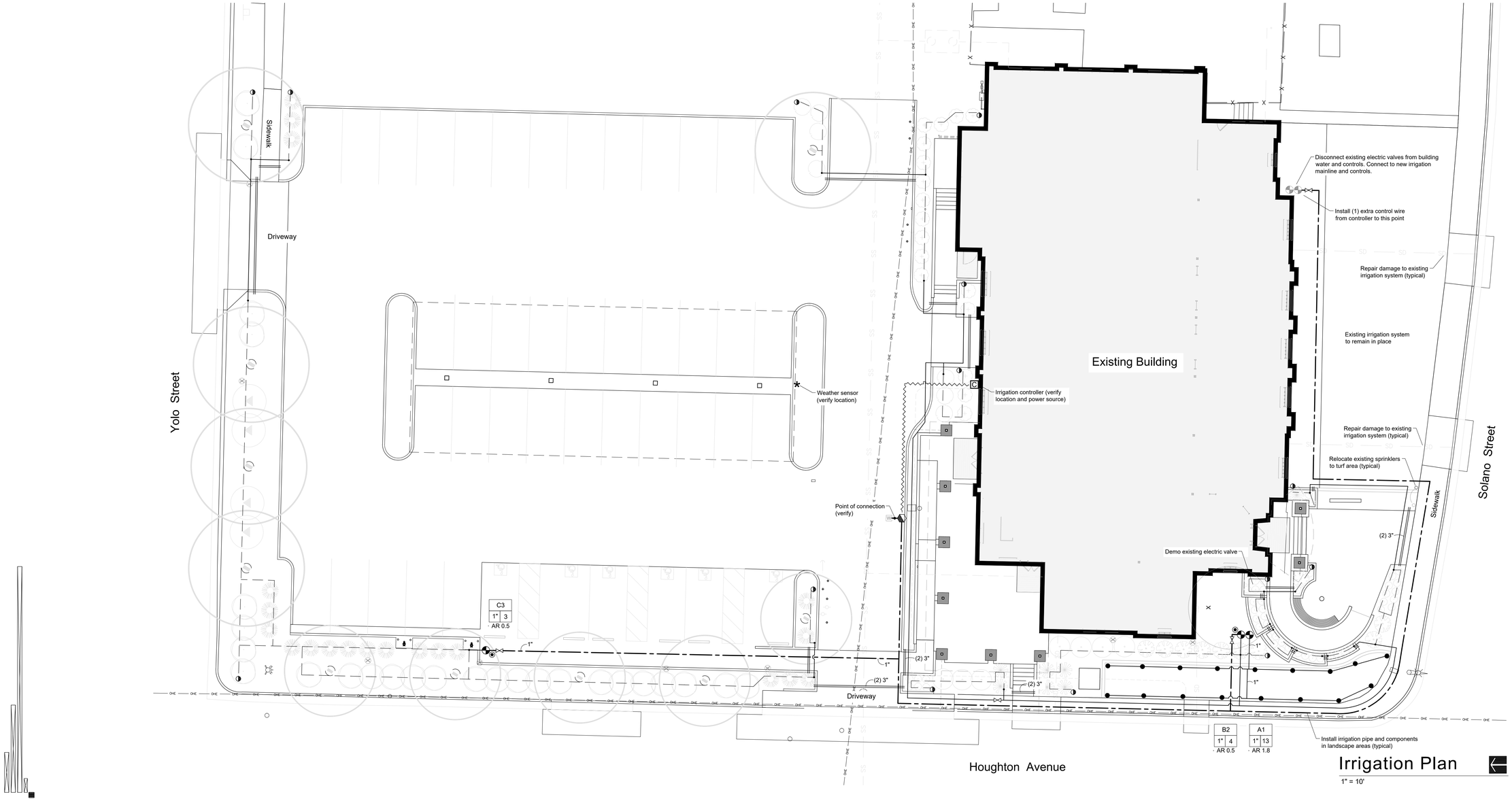

Irrigation Plan
1" = 10'

Copyright ©

All ideas, designs, arrangements and plans indicated or represented by this drawing are owned by, and the property of, NICHOLS, MELBURG and ROSSETTO and were created, evolved and developed for use on, and in conjunction with, the specified project. None of such ideas, designs, arrangements or plans shall be used by, or disclosed to any person, firm or corporation for any purpose whatsoever without the written permission of NICHOLS, MELBURG and ROSSETTO.

NICHOLS MELBURG ROSSETTO
ARCHITECTS + ENGINEERS
300 KNOLLCREST DRIVE
REDDING, CA. 96002
(530) 222-3300 (530) 222-3538 FAX
http://www.nmrdesign.com

CONSULTANTS

Michael Lander ASLA
Landscape Architecture
RLA 2399
20270 Lupine Drive Redding, California 96002
(530) 223-2488 mlander@shasta.com

LICENSE STAMPS

REGISTERED LANDSCAPE ARCHITECT
MICHAEL J. LANDER
No. 2399
2-13-25
Exp: 12/31/25
STATE OF CALIFORNIA

PROJECT NAME

TEHAMA COUNTY CORNING VETERAN'S HALL

1620 SOLANO ST.
CORNING, CA

SHEET TITLE

IRRIGATION PLAN

DRAWING STATUS

CONSTRUCTION DOCUMENTS

REVISIONS

Sym.	Description	Date

Drawn By	ML
Date Issued	2/13/2025
Scale	1"=10'
Project No.	21-6497

SHEET No.

L2

California Water Efficient Landscape Worksheet							
Reference Evapotransp		50.7	Project Type		Non-Residential		0.45
Hydrozone # / Planting Description[a]	Plant Factor (PF)	Irrigation Method[b]	Irrigation Efficiency (IE)[c]	ETAF (PF/IE)	Landscape Area (Sq. Ft.)	ETAF x Area	Estimated Total Water Use (ETWU)[d]
Regular Landscape Areas							
A1	0.7	Overhead	0.75	0.93	560	523	16430
B2	0.4	Drip	0.81	0.49	1110	548	17230
C3	0.2	Drip	0.81	0.25	1920	474	14902
			0.75	0.00		0	0
			0.75	0.00		0	0
			0.75	0.00		0	0
			0.75	0.00		0	0
			0.75	0.00		0	0
			0.75	0.00		0	0
			0.75	0.00		0	0
			0.75	0.00		0	0
			0.75	0.00		0	0
			0.75	0.00		0	0
			0.75	0.00		0	0
			0.75	0.00		0	0
			0.75	0.00		0	0
			0.75	0.00		0	0
			0.75	0.00		0	0
			0.75	0.00		0	0
			0.75	0.00		0	0
			Totals		3590	1545	48562
Special Landscape Areas							
	[redacted]		1			0	0
			1			0	0
			1			0	0
			1			0	0
			Totals		0	0	0
						ETWU Total	48562
						Maximum Allowed Water Allowance (MAWA)[e]	50782

ETAF Calculations

Regular Landscape Areas

Total ETAF x Area	1545
Total Area	3590
Average ETAF	0.43

Average ETAF for Regular Landscape Areas must be 0.55 or below for residential areas, and 0.45 or below for non-residential

All Landscape Areas

Total ETAF x Area	1545
Total Area	3590
Average ETAF	0.43

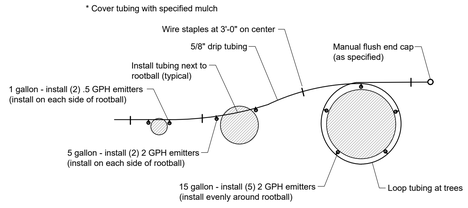

6 / L3 Drip Layout (Plug-in)
Not to Scale

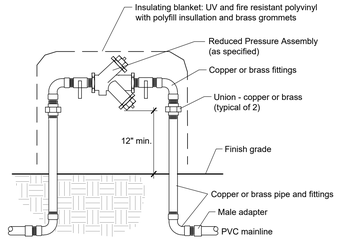

1 / L3 Reduced Pressure Assembly
Not to Scale

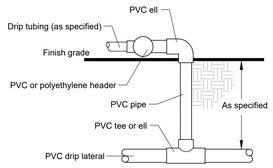

7 / L3 Drip Connection
Not to Scale

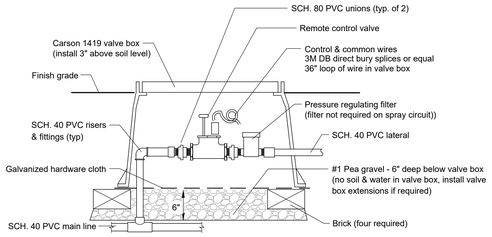

2 / L3 Valve Assembly
Not to Scale

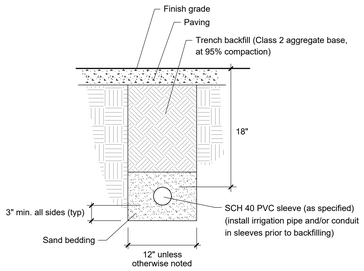

8 / L3 Sleeve
Not to Scale

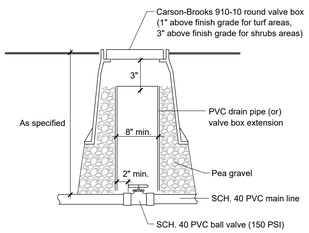

3 / L3 Ball Valve
Not to Scale

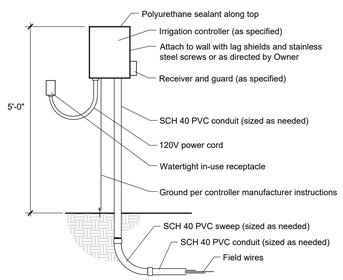

9 / L3 Irrigation Controller
Not to Scale

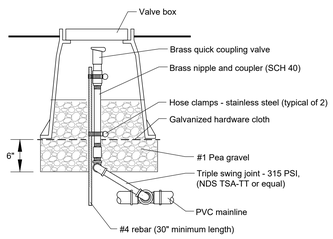

4 / L3 Quick Coupler Valve
Not to Scale

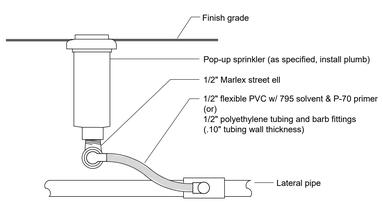

5 / L3 Pop-up Sprinkler
Not to Scale

Copyright ©

All ideas, designs, arrangements and plans indicated or represented by this drawing are owned by, and the property of, NICHOLS, MELBURG and ROSSETTO and were created, evolved and developed for use on, and in conjunction with, the specified project. None of such ideas, designs, arrangements and plans shall be used by or disclosed to any person, firm or corporation for any purpose whatsoever without the written permission of NICHOLS, MELBURG and ROSSETTO.

NICHOLS MELBURG ROSSETTO
ARCHITECTS + ENGINEERS
300 KNOLLCREST DRIVE
REDDING, CA. 96002
(530) 222-3300 (530) 222-3538 FAX
http://www.nmrdesign.com

CONSULTANTS

Michael Lander ASLA
Landscape Architecture
RLA 2399
20270 Lupine Drive Redding, California 96002
(530) 223-2488 mlander@shasta.com

LICENSE STAMPS

REGISTERED LANDSCAPE ARCHITECT
MICHAEL J. LANDER
2399
2-15-25
Exp. 12/31/25
STATE OF CALIFORNIA

PROJECT NAME

TEHAMA COUNTY
CORNING
VETERAN'S HALL

1620 SOLANO ST.
CORNING, CA

SHEET TITLE

IRRIGATION DETAILS

DRAWING STATUS

CONSTRUCTION DOCUMENTS

REVISIONS

Sym.	Description	Date

Drawn By	ML
Date Issued	2/13/2025
Scale	
Project No.	21-6497

SHEET No.

L3

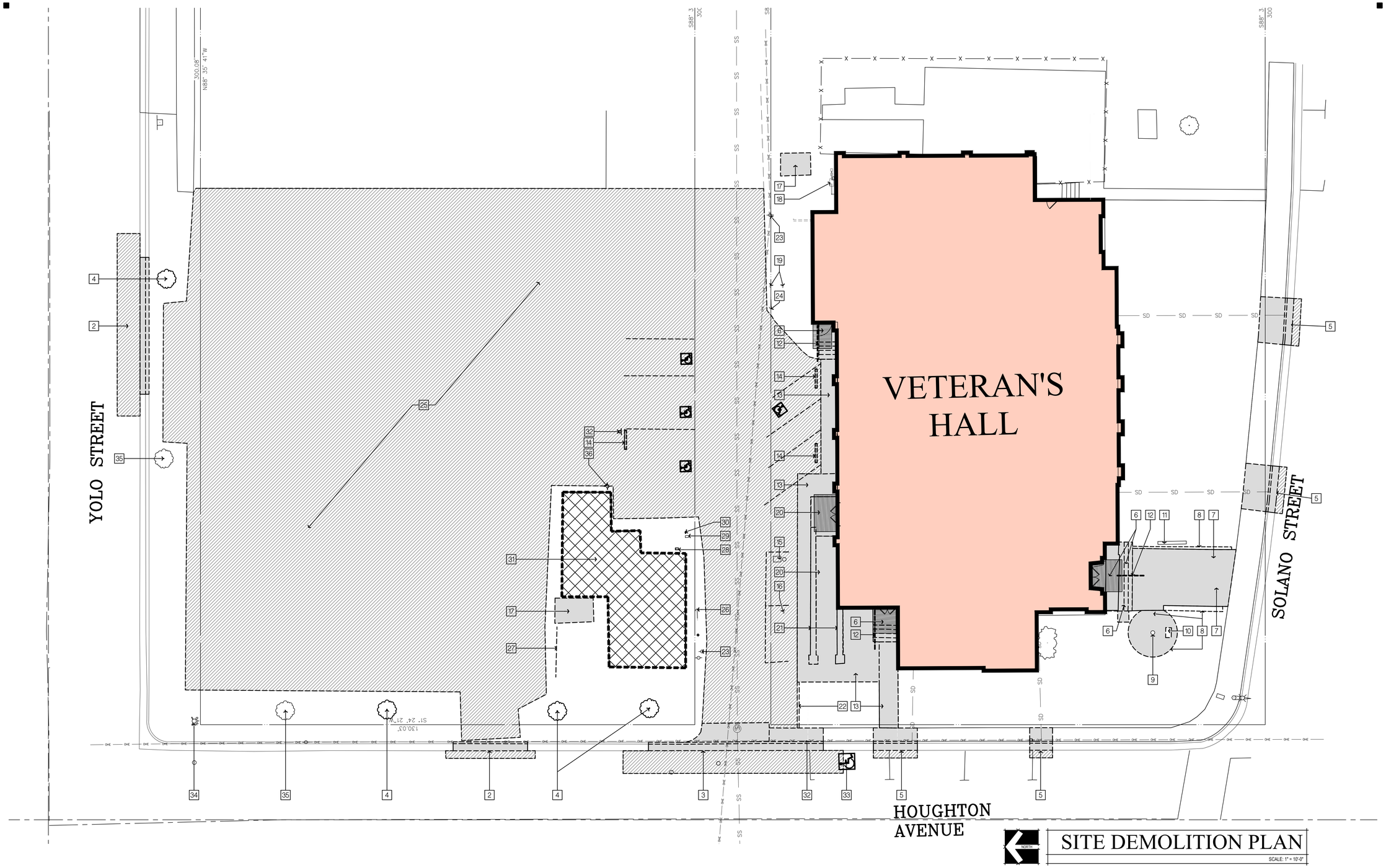

SITE DEMOLITION PLAN

SCALE: 1" = 10'-0"

GENERAL NOTES

1. PROVIDE SAFEGUARDS FOR CONSTRUCTION, ALTERATION AND DEMOLITION OPERATIONS TO PROVIDE REASONABLE SAFETY TO LIFE AND PROPERTY FROM FIRE DURING SUCH OPERATIONS PER COMPLIANCE WITH "FIRE SAFETY DURING CONSTRUCTION AND DEMOLITION" IN ACCORDANCE WITH CALIFORNIA FIRE CODE (CFC) CHAPTER 33, TITLE 19, DIVISION 1, CALIFORNIA CODE OF REGULATIONS (CCR)

SITE DEMOLITION SHEET NOTES

ALL ITEMS ARE EXISTING UNLESS MARKED AS NEW OR (N).

1. REMOVE DRIVEWAY CURB CUT: REMOVE CURB, GUTTER AND A.C. PAVING TO ACCOMMODATE NEW TYPICAL CURB AND GUTTER
2. REMOVE CURB, GUTTER AND A.C. PAVING TO ACCOMMODATE NEW DRIVEWAY CURB CUT
3. REMOVE CURB, GUTTER, SIDEWALK AND A.C. PAVING TO ACCOMMODATE NEW ALLEY INTERSECTION
4. REMOVE TREE AND ROOTS
5. REMOVE CURB, GUTTER, SIDEWALK AND A.C. PAVING TO ACCOMMODATE REPLACEMENT UNDER-SIDEWALK DRAIN
6. REMOVE BRICK STEPS AND LANDING AND SUBSTRUCTURE
7. REMOVE CONCRETE SIDEWALK
8. CUSTOM BRICK PAVERS WITH DONORS NAMES ENGRAVED: REMOVE AND RE-INSTALL PER IMPROVEMENTS SITE PLAN. REPLACE ALL BRICKS DAMAGED DURING DEMOLTION.
9. FLAG POLE AND DECORATIVE BASE TO REMAIN
10. DEDICATION MONUMENT: REMOVE AND RE-INSTALL PER IMPROVEMENTS PLAN.
11. ELECTRONIC SIGN TO REMAIN.
12. REMOVE HANDRAIL
13. REMOVE CONCRETE SIDEWALK
14. REMOVE CONCRETE BUMPER
15. WATER METER, RELOCATE
16. SEWER CLEAN-OUT, REMOVE LATERAL
17. REMOVE CONCRETE SLAB
18. GAS METER
19. SEWER CLEAN-OUT TO REMAIN
20. REMOVE RAISE CONCRETE LANDING, RAMP AND HANDRAILS
21. REMOVE BRICK SITE WALL
22. REMOVE CONCRETE CURB
23. POWER POLE TO REMAIN
24. GUY WIRE TO REMAIN
25. REMOVE A.C. PAVING.
26. GUY WIRE TO BE RELOCATED
27. REMOVE FENCE
28. REMOVE GAS METER
29. REMOVE WATER METER
30. REMOVE SEWER CLEAN-OUT
31. REMOVE STRUCTURE, COMPLETE.
32. REMOVE SIGN
33. REMOVE PAINTED ACCESSIBLE PARKING SYMBOL
34. FIRE HYDRANT TO REMAIN
35. TREE TO REMAIN
36. REMOVE LIGHT POLE

LEGEND

- REMOVE CONCRETE PAVING, RAMPS AND STAIRS
- REMOVE ASPHALT PAVING
- REMOVE BUILDING

Copyright © 2025

All ideas, designs, arrangements and plans indicated or represented by this drawing are owned by, and the property of, NICHOLS, MELBURG and ROSSETTO and were created, evolved and developed for use on, and in conjunction with, the specified project. None of such ideas, designs, arrangements or plans shall be used by, or disclosed to any person, firm or corporation for any purpose whatsoever without the written permission of NICHOLS, MELBURG and ROSSETTO.

NICHOLS MELBURG & ROSSETTO
ARCHITECTS + ENGINEERS
300 KNOLLCREST DRIVE
REDDING, CA. 96002
(530) 222-3300 (530) 222-3538 FAX
http://www.nmrdesign.com

CONSULTANTS

LICENSE STAMPS

LICENSED ARCHITECT
KYLE MATTI
C 27504
REN. 10/31/25
STATE OF CALIFORNIA

PROJECT NAME

TEHAMA COUNTY
CORNING
VETERAN'S HALL

1620 SOLANO ST.
CORNING, CA

SHEET TITLE

SITE DEMOLITION PLAN

DRAWING STATUS

CONSTRUCTION DOCUMENTS

REVISIONS

Sym.	Description	Date

Drawn By	KP
Date Issued	2/13/2025
Scale	1" = 10'-0"
Project No.	21-6497

SHEET No.

A001

Login Name: KlarenP
Plot Date: February 13, 2025 - 8:35 am
File Name: N:\Projects\6000\Civil\2021\21-6497 Tehama Co. Corning Vets Hall\Drawings\CVH SITE DEMO.dwg
XREFS: x-CVH-site 1 x-CVH Topo 1 x-CVH-fill 1 x-CVH-GRID 1 x-CVH_Title Block

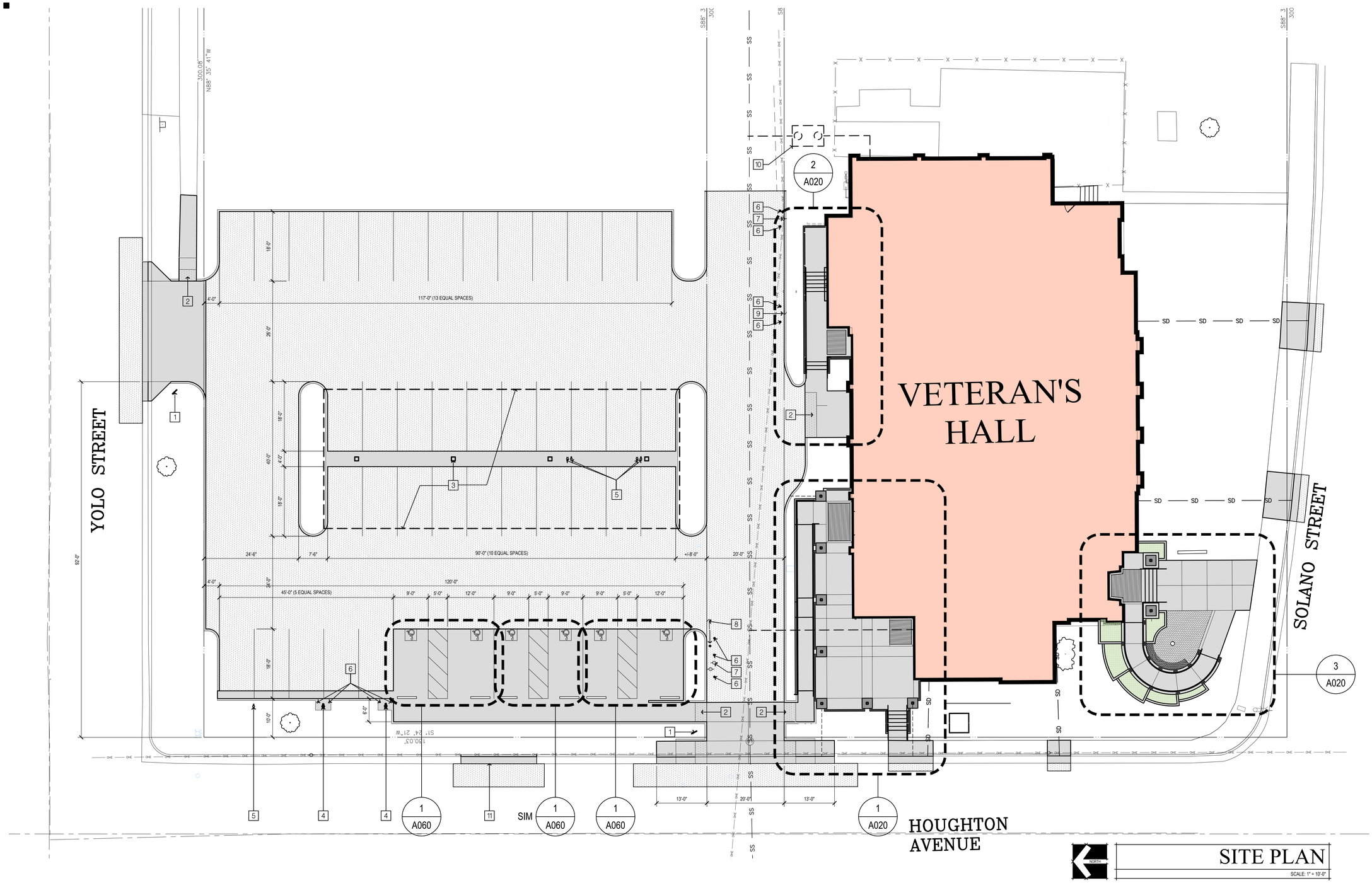

SITE PLAN

SCALE: 1" = 10'-0"

Copyright © 2025

All ideas, designs, arrangements and plans indicated or represented by this drawing are owned by, and the property of, NICHOLS, MELBURG and ROSSETTO and were created, evolved and developed for use on, and in conjunction with, the specified project. None of such ideas, designs, arrangements or plans shall be used by, or disclosed to any person, firm or corporation for any purpose whatsoever without the written permission of NICHOLS, MELBURG and ROSSETTO.

NICHOLS MELBURG & ROSSETTO
ARCHITECTS + ENGINEERS
300 KNOLLCREST DRIVE
REDDING, CA. 96002
(530) 222-3300 (530) 222-3538 FAX
http://www.nmrdesign.com

CONSULTANTS

LICENSE STAMPS

LICENSED ARCHITECT
KYLE MATTI
C 27504
REN. 10/31/25
STATE OF CALIFORNIA

PROJECT NAME

TEHAMA COUNTY CORNING VETERAN'S HALL

1620 SOLANO ST.
CORNING, CA

SHEET TITLE

SITE PLAN

DRAWING STATUS

CONSTRUCTION DOCUMENTS

REVISIONS

Sym.	Description	Date

Drawn By	KP
Date Issued	2/13/2025
Scale	1" = 10'-0"
Project No.	21-6497

SHEET No.

A010

GENERAL NOTES

1. PROVIDE SAFEGUARDS FOR CONSTRUCTION, ALTERATION AND DEMOLITION OPERATIONS TO PROVIDE REASONABLE SAFETY TO LIFE AND PROPERTY FROM FIRE DURING SUCH OPERATIONS PER COMPLIANCE WITH "FIRE SAFETY DURING CONSTRUCTION AND DEMOLITION" IN ACCORDANCE WITH CALIFORNIA FIRE CODE (CFC) CHAPTER 33, TITLE 19, DIVISION 1, CALIFORNIA CODE OF REGULATIONS (CCR)

SITE PLAN SHEET NOTES

ALL ITEMS ARE NEW UNLESS MARKED AS EXISTING OR (E).

1. TOW AWAY SIGN, SEE 4/060
2. CAST-IN-PLACE DETECTABLE WARNINGS, SEE 6/A060
3. PRE-ENGINEERED PHOTOVOLTAIC CANOPY SYSTEM.
4. E.V. CHARGING STATION, SEE ELECTRICAL DRAWINGS
5. FUTURE EV CHARGING STATION, SEE ELECTRICAL DRAWINGS
6. BOLLARD
7. (E) POWER POLE
8. (E) GUY WIRE TO BE RELOCATED
9. (E) GUY WIRE
10. GREASE INTERCEPTOR
11. REPLACE CURB AND GUTTER AT (E) DRIVEWAY TO BE REMOVED

LEGEND

- CONCRETE PAVING / SIDEWALK, SEE CIVIL DRAWINGS
- A.C. PAVING, SEE CIVIL DRAWINGS

Login Name: KarenP
Plot Date: February 13, 2025 - 8:39 am
File Name: N:\Projects\6000\Civil\2021\21-6497 Tehama Co. Corning Veta Hall\Drawings\CVH SITE.dwg
XREFS: x-CVH-site : x-CVH Topo : x-CVH-fill : x-CVH-GRID : x-CVH_Title Block

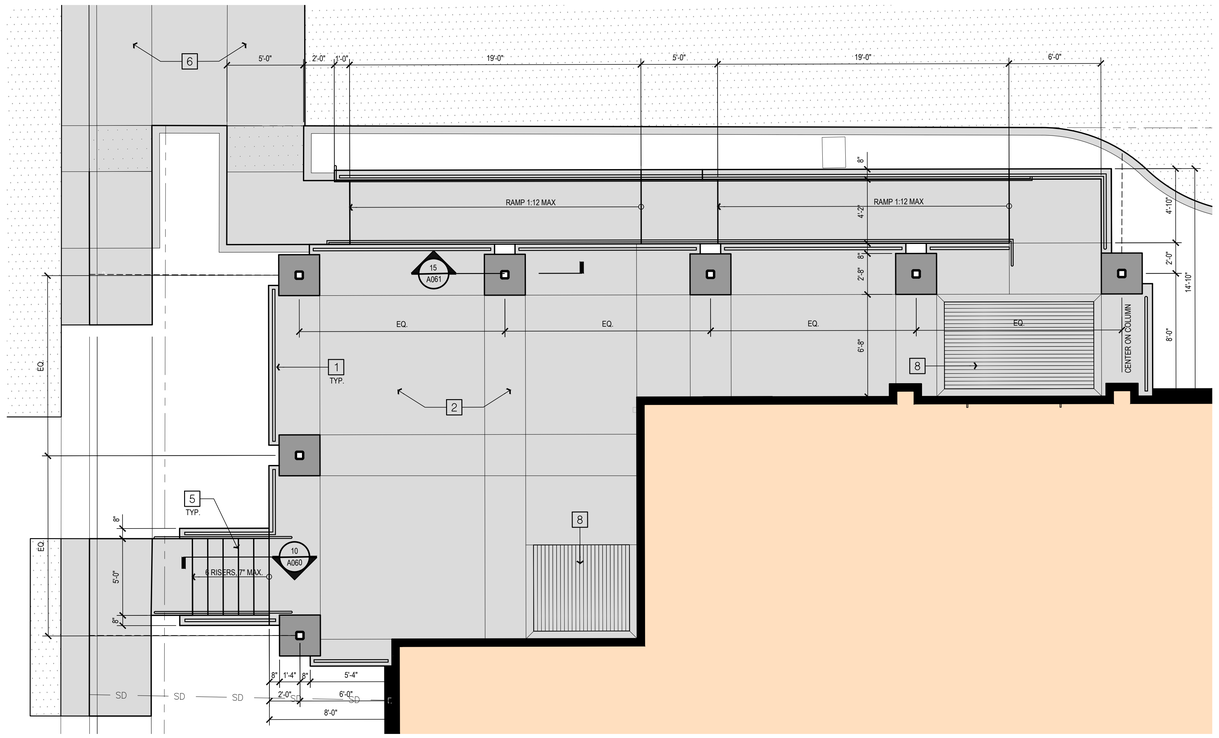

1 ENLARGED SITE PLAN
SCALE: 1/4" = 1'-0"

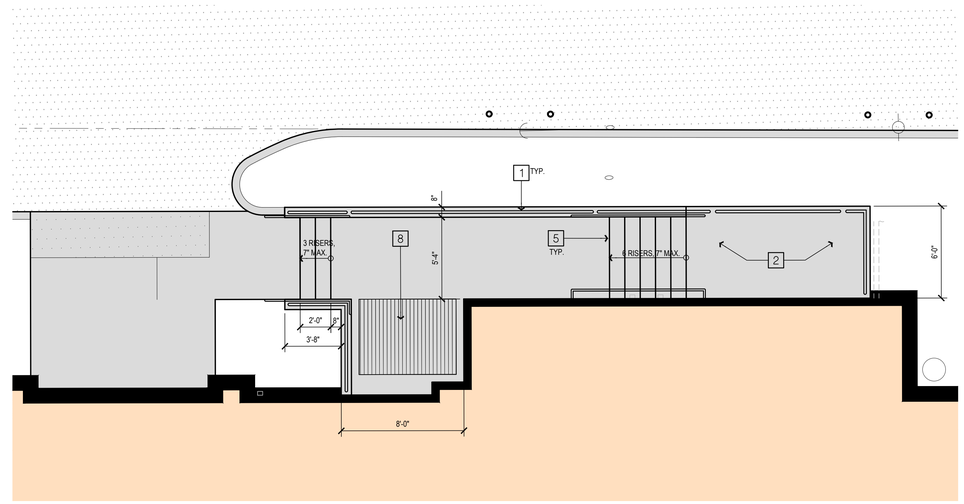

2 ENLARGED SITE PLAN
SCALE: 1/4" = 1'-0"

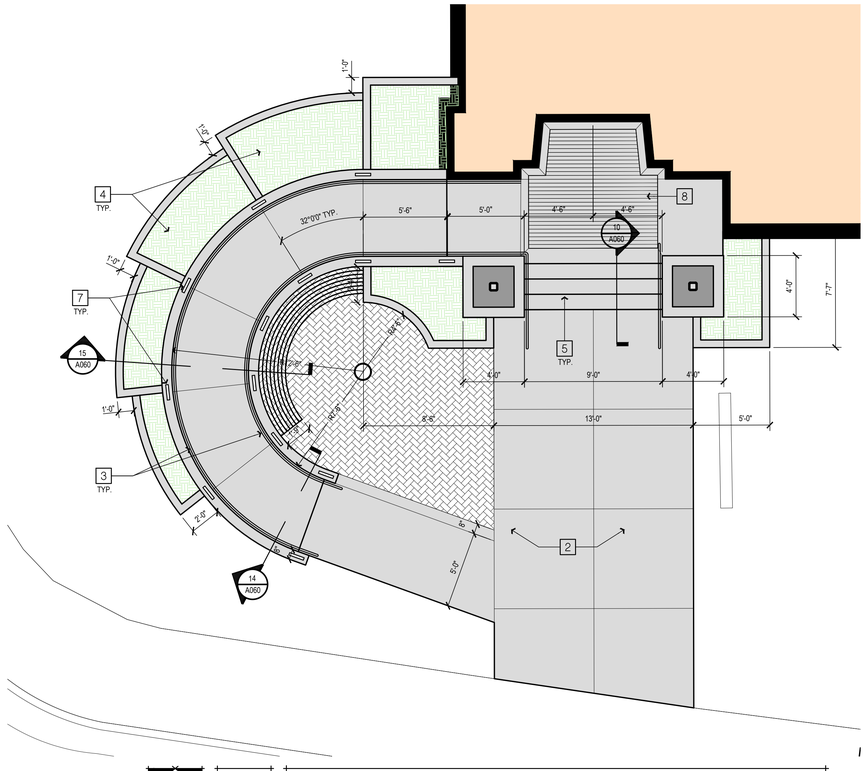

3 ENLARGED SITE PLAN
SCALE: 1/4" = 1'-0"

ENLARGED SITE PLAN GENERAL NOTES

1. PROVIDE SAFEGUARDS FOR CONSTRUCTION, ALTERATION AND DEMOLITION OPERATIONS TO PROVIDE REASONABLE SAFETY TO LIFE AND PROPERTY FROM FIRE DURING SUCH OPERATIONS PER COMPLIANCE WITH "FIRE SAFETY DURING CONSTRUCTION AND DEMOLITION" IN ACCORDANCE WITH CALIFORNIA FIRE CODE (CFC) CHAPTER 33, TITLE 19, DIVISION 1, CALIFORNIA CODE OF REGULATIONS (CCR)

SITE PLAN SHEET NOTES

ALL ITEMS ARE NEW UNLESS MARKED AS EXISTING OR (E).

1. GUARD RAIL, SEE 1/A061
2. CONC. WALK, SEE 8/A060
3. DOUBLE HANDRAIL, SEE 14/A060
4. RAISED PLANTER BEDS W/ CONCRETE WALLS WITH SELF ADHERED WATER PROOF MEMBRANE AND PROTECTION BOARD ON THE INSIDE FACE OF ALL WALLS.
5. CONCRETE STAIRS, SEE DETAIL 12/A060
6. CONCRETE PAVING, SEE DETAIL 9/A060
7. DECORATIVE HANDRAIL POST, SEE DETAIL 13/A060
8. RECESSED WALK-OFF MAT
9. RAISED PLANTER WITH SELF ADHERED WATER PROOF MEMBRANE AND PROTECTION BOARD ON THE INSIDE FACE OF ALL WALLS.

LEGEND

- CONCRETE PAVING / SIDEWALK, SEE CIVIL DRAWINGS
- A.C. PAVING, SEE CIVIL DRAWINGS
- MEMORIAL BRICK PAVER SYSTEM

Copyright © 2025

All ideas, designs, arrangements and plans indicated or represented by this drawing are owned by, and the property of, NICHOLS, MELBURG and ROSSETTO and were created, evolved and developed for use on, and in conjunction with, the specified project. None of such ideas, designs, arrangements or plans shall be used by, or disclosed to any person, firm or corporation for any purpose whatsoever without the written permission of NICHOLS, MELBURG and ROSSETTO.

NICHOLS MELBURG & ROSSETTO
ARCHITECTS + ENGINEERS
300 KNOLLCREST DRIVE
REDDING, CA. 96002
(530) 222-3300 (530) 222-3538 FAX
http://www.nmrdesign.com

CONSULTANTS

LICENSE STAMPS

LICENSED ARCHITECT
KYLE MATTI
C 27504
REN. 10/31/25
STATE OF CALIFORNIA

PROJECT NAME

TEHAMA COUNTY CORNING VETERAN'S HALL

1620 SOLANO ST.
CORNING, CA

SHEET TITLE

ENLARGED SITE RAMPS & STAIRS

DRAWING STATUS

CONSTRUCTION DOCUMENTS

REVISIONS

Sym.	Description	Date

Drawn By	KP
Date Issued	2/13/2025
Scale	1/4" = 1'-0"
Project No.	21-6497

SHEET No.

A020

Login Name: KarenP
Plot Date: February 13, 2025 - 8:43 am
File Name: N:\Projects\6000\Cad\C02\21-6497 Tehama Co. Corning Veta Hall\Drawings\CVH SITE enlarged.dwg
XREFS: x:\CVH_Title Block ; x:\CVH-site ; x:\CVH Topo ; x:\CVH-fr1 ; x:\CVH-GRID

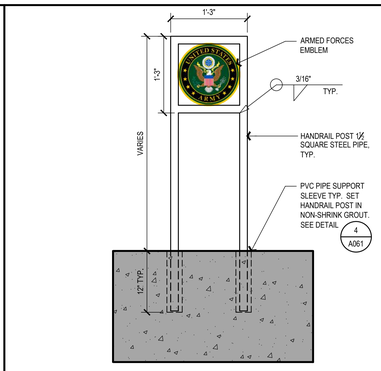

HANDRAIL POST (13)
SCALE: 1"=1'-0"

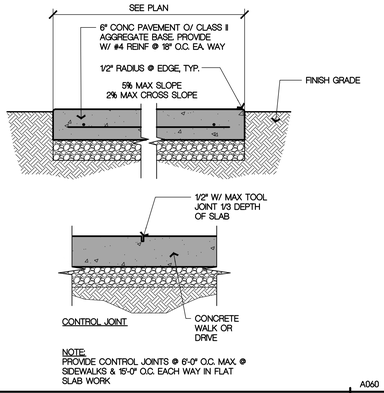

CONCRETE PAVING W/ REINFORCEMENT (9)
SCALE: 1"=1'-0"
A060

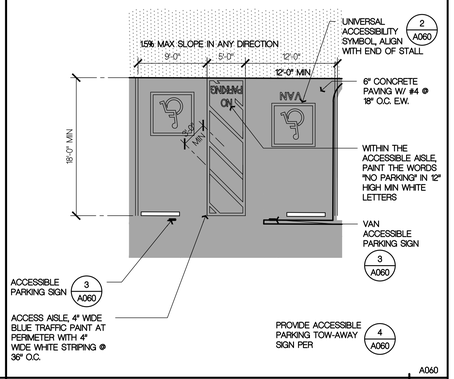

ENLARGED ACCESSIBLE PARKING PLAN (1)
SCALE: 1/8"=1'-0"
A060

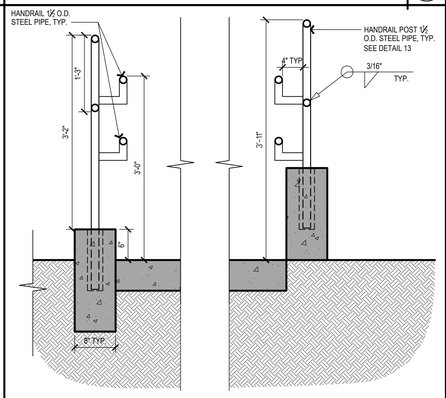

HANDRAIL AT RAMP (14)
SCALE: 1"=1'-0"

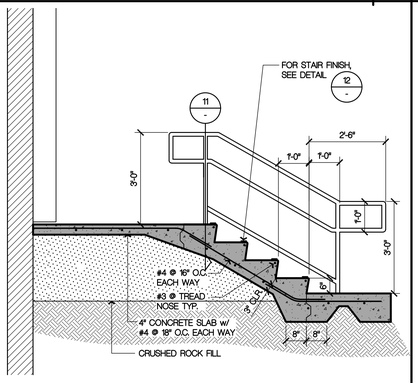

EXTERIOR STAIR & HANDRAIL (10)
SCALE: 1/2"=1'-0"

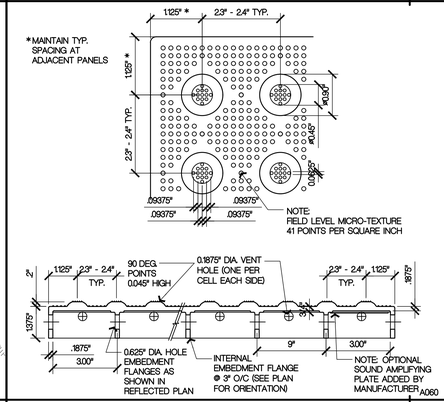

CAST-IN-PLACE DETECTABLE WARNING (6)
SCALE: N.T.S.
A060

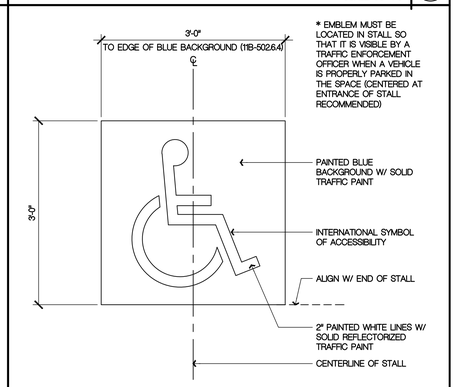

UNIVERSAL ACCESSIBILITY SYMBOL (2)
SCALE: 1"=1'-0"
A060

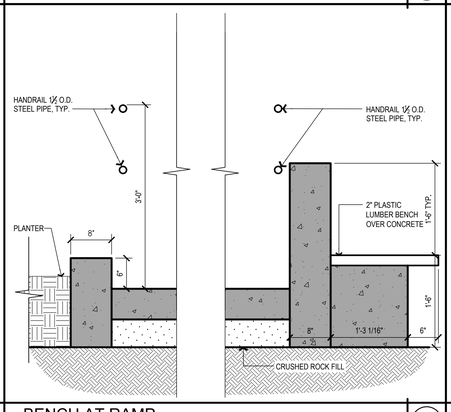

BENCH AT RAMP (15)
SCALE: 1"=1'-0"

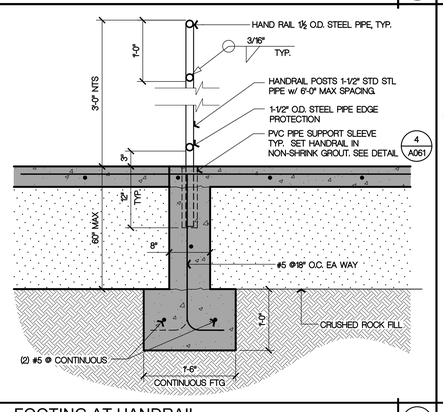

FOOTING AT HANDRAIL (11)
SCALE: 1"=1'-0"

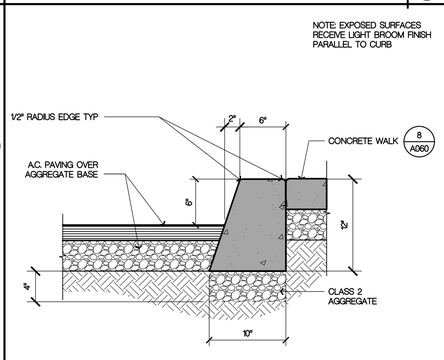

CONCRETE CURB AT SIDEWALK (7)
SCALE: 1-1/2"=1'-0"
A060

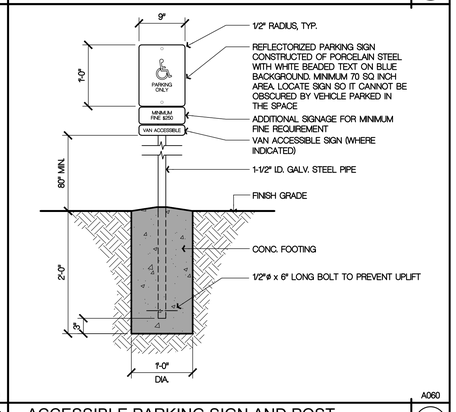

ACCESSIBLE PARKING SIGN AND POST (3)
SCALE: 1"=1'-0"
A060

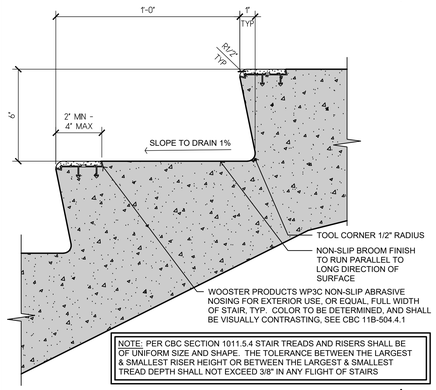

STAIR FINISH (12)
SCALE: 3" = 1'-0"

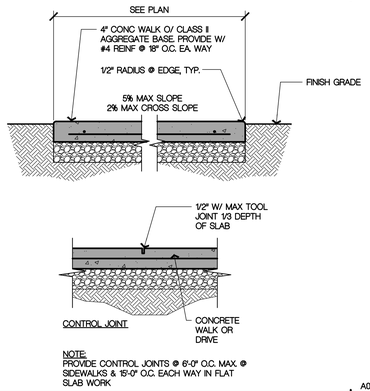

CONCRETE WALK AND TYP. PAVING JOINTS (8)
SCALE: 1"=1'-0"
A060

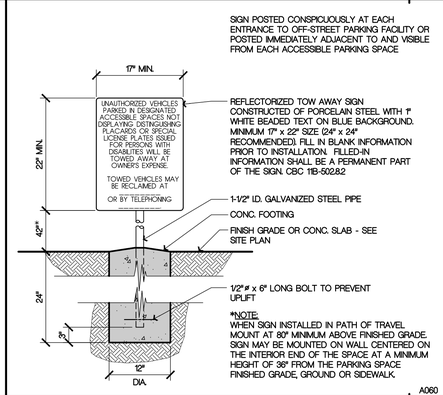

ACCESSIBLE PARKING TOW SIGN (4)
SCALE: 1"=1'-0"
A060

Copyright © 2025
All ideas, designs, arrangements and plans indicated or represented by this drawing are owned by, and the property of, NICHOLS, MELBURG and ROSSETTO and were created, evolved and developed for use on, and in conjunction with, the specified project. None of such ideas, designs, arrangements and plans shall be used by or disclosed to any person, firm or corporation for any purpose whatsoever without the written permission of NICHOLS, MELBURG and ROSSETTO.

NICHOLS MELBURG & ROSSETTO
ARCHITECTS + ENGINEERS
300 KNOLLCREST DRIVE
REDDING, CA. 96002
(530) 222-3300 (530) 222-3538 FAX
http://www.nmrdesign.com

CONSULTANTS

LICENSE STAMPS

LICENSED ARCHITECT
KYLE MATTHEWS
C 27504
REN. 10/31/25
STATE OF CALIFORNIA

PROJECT NAME

TEHAMA COUNTY
CORNING
VETERAN'S HALL

1620 SOLANO ST.
CORNING, CA

SHEET TITLE

SITE DETAILS

DRAWING STATUS

CONSTRUCTION DOCUMENTS

REVISIONS

Sym.	Description	Date

Drawn By	KP
Date Issued	2/13/2025
Scale	AS NOTED
Project No.	21-6497

SHEET No.

A060

Login Name: KevinP
Plot Date: February 13, 2025 - 8:47 am
File Name: N:\Projects\6000\Jobs\2021\21-6497 Tehama Co. Corning Vets Hall\Drawings\CKH-SITE DETAILS.dwg
XREFS: pwrap bw rgb | conc-walk-sidebar | pwrap-up-sidebar-ramp | pwrap-up-sidebar-ramp | pwrap-ex-stairs | conc-walk-pavers-meter | accp-package | conc-walk-plans | x-CKH_Title Block | x-CKH-Utils | site-stair-entry | site-stair-entry2 | Handrail at planter | Handrail post | Handrail at ramp | x-CKH Topo | x-CKH-Topo

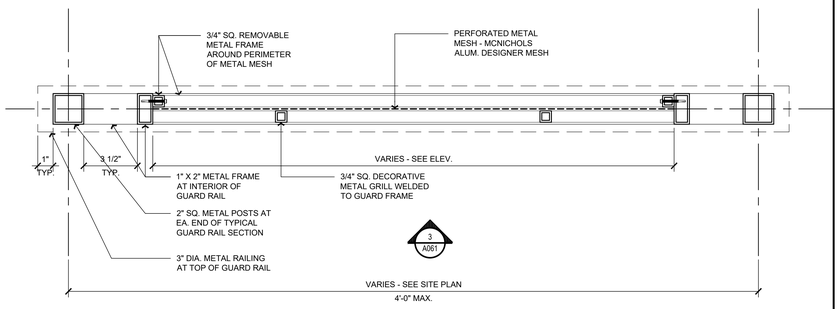

21-6497 A060

GUARD RAIL PLAN

SCALE: 3"=1'-0" 1

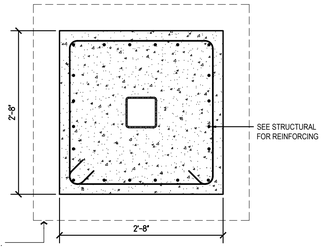

A PLAN VIEW

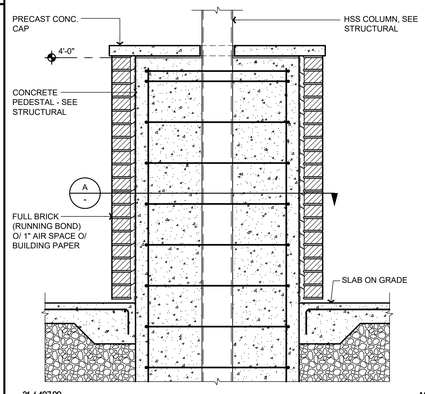

21-6497.00 A061

PATIO COLUMN

SCALE: 1"=1'-0" 15

NOTE:
PAINT ALL METAL SURFACES, TYP.
TYP. STEEL RAIL THICKNESS TO BE 1/8"

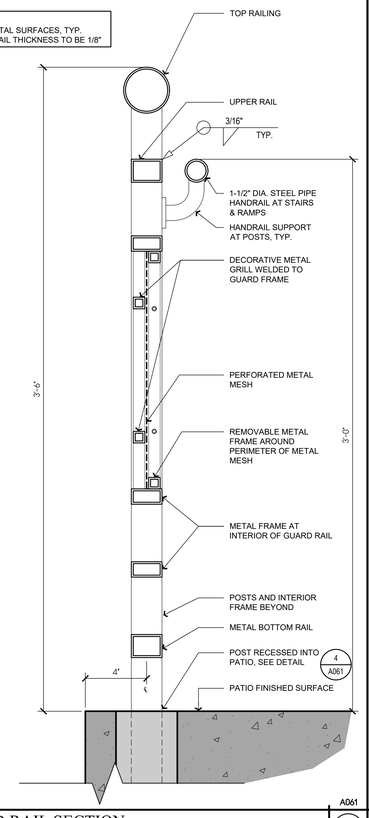

21-6497.00 A061

GUARD RAIL SECTION

SCALE: 3"=1'-0" 11

NOTE:
PAINT ALL METAL SURFACES, TYP.
TYP. STEEL RAIL THICKNESS TO BE 1/8"

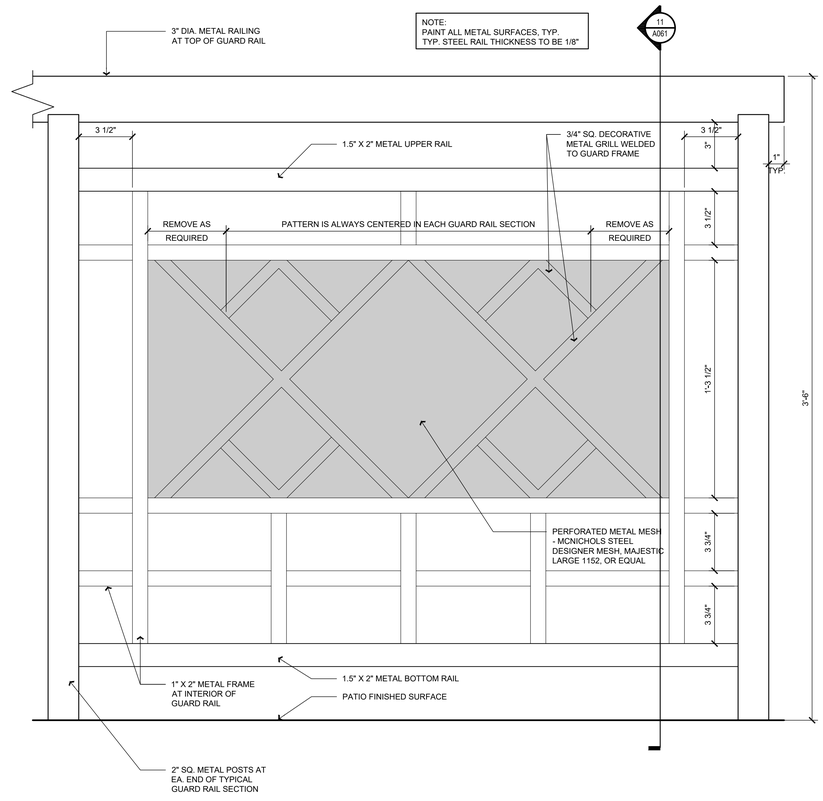

21-6497 A060

GUARD RAIL ELEVATION

SCALE: 3"=1'-0" 3

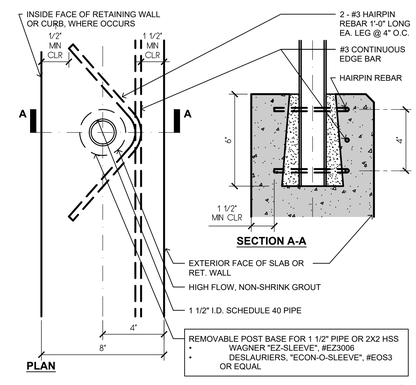

HANDRAIL / GUARDRAIL ANCHORAGE

SCALE: 3" = 1'-0" 4

Copyright © 2025

All ideas, designs, arrangements and plans indicated or represented by this drawing are owned by, and the property of, NICHOLS, MELBURG and ROSSETTO and were created, evolved and developed for use on, and in conjunction with, the specified project. None of such ideas, designs, arrangements and plans shall be used by or disclosed to any person, firm or corporation for any purpose whatsoever without the written permission of NICHOLS, MELBURG and ROSSETTO.

NICHOLS MELBURG & ROSSETTO
ARCHITECTS + ENGINEERS
300 KNOLLCREST DRIVE
REDDING, CA. 96002
(530) 222-3300 (530) 222-3538 FAX
http://www.nmrdesign.com

CONSULTANTS

LICENSE STAMPS

LICENSED ARCHITECT
KYLE MATTHEW ROSSETTO
C 27504
REN. 10/31/25
STATE OF CALIFORNIA

PROJECT NAME

TEHAMA COUNTY
CORNING
VETERAN'S HALL

1820 SOLANO ST.
CORNING, CA

SHEET TITLE

SITE DETAILS

DRAWING STATUS

CONSTRUCTION DOCUMENTS

REVISIONS

Sym.	Description	Date

Drawn By	KP
Date Issued	2/13/2025
Scale	AS NOTED
Project No.	21-6497

SHEET No.

A061

Login Name: KenerP
Plot Date: February 13, 2025 - 8:49 am
File Name: K:\Projects\6000\Cx\0202\21-6497 Tehama Co. Corning Vets Hall\Drawings\CVH-SITE DETAILS.dwg
xrefs: parking-base dwg | conc-wall-section | | parking-detail-nwmtg | parking-ex-header | concrete-pavers-nwmtg | conc-walk-pavers-nwmtg | | site-stair-entry | site-stair-entry2 | Handrail at stair | CVH-Trim | CVH-Rf1 | CVH-Rf2 | Handrail at planter | Handrail post | Handrail at ramp | CVH_Title Block | CVH-vets | site-stair-entry | site-stair-entry2 | Handrail at planter | Handrail post | Handrail at ramp | CVH-Trim | CVH-Rf1 | CVH-Rf2 | GRID | guardplan | guardview | guardsect | 06E-010_Handrail Guardrail Anchorage_dwg | 06E-004_Typ Ext Stair Flats_dwg | patiocolumn

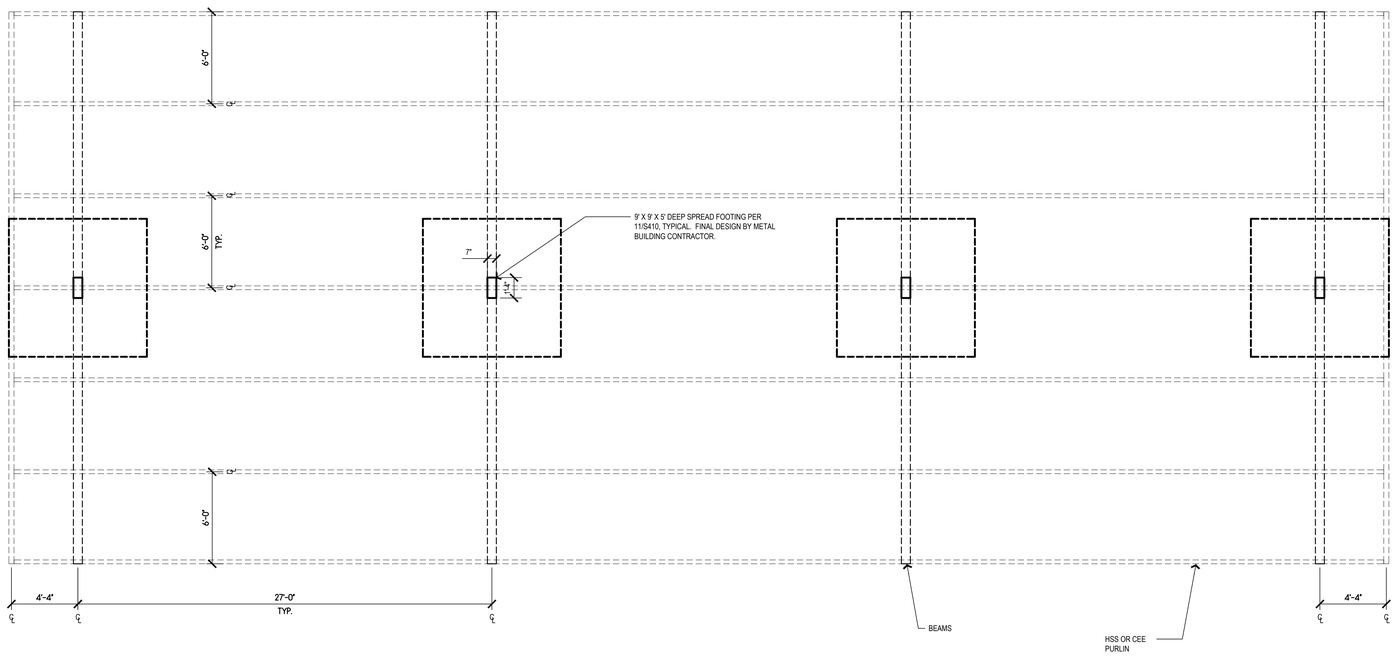

NORTH

FRAMING PLAN

SCALE: 1/4" = 1'-0"

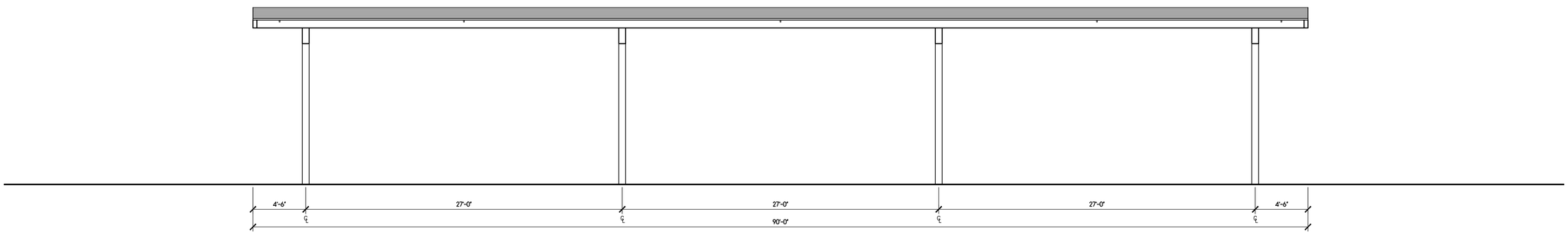

WEST ELEV.

SCALE: 1/4" = 1'-0"

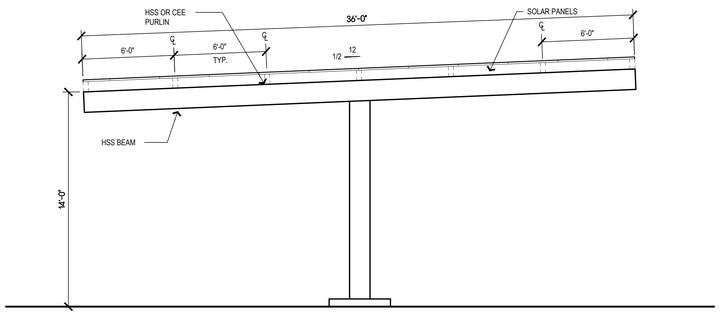

SOUTH ELEV.

SCALE: 1/4" = 1'-0"

Copyright © 2025

All ideas, designs, arrangements and plans indicated or represented by this drawing are owned by, and the property of, NICHOLS, MELBURG and ROSSETTO and were created, evolved and developed for use on, and in conjunction with, the specified project. None of such ideas, designs, arrangements or plans shall be used by or disclosed to any person, firm or corporation for any purpose whatsoever without the written permission of NICHOLS, MELBURG and ROSSETTO.

NICHOLS MELBURG & ROSSETTO
ARCHITECTS + ENGINEERS
300 KNOLLCREST DRIVE
REDDING, CA. 96002
(530) 222-3300 (530) 222-3538 FAX
http://www.nmrdesign.com

CONSULTANTS

LICENSE STAMPS

LICENSED ARCHITECT
KYLE MATTI
C 27504
REN. 10/31/25
STATE OF CALIFORNIA

PROJECT NAME

TEHAMA COUNTY
CORNING
VETERAN'S HALL

1620 SOLANO ST.
CORNING, CA

SHEET TITLE

SOLAR CARPORT FRAMING PLAN AND ELEVATIONS

DRAWING STATUS

CONSTRUCTION DOCUMENTS

REVISIONS

Sym.	Description	Date

Drawn By	KP
Date Issued	2/13/2025
Scale	1/4" = 1'-0"
Project No.	21-6497

SHEET No.

A062

Login Name: KenerP
Plot Date: February 13, 2025 - 8:51 am
File Name: N:\Projects\6000\Civil\2021\21-6497 Tehama Co. Corning Vets Hall\Drawings\CVH-Solar-elev.dwg
XREFS: x-CVH_Title Block

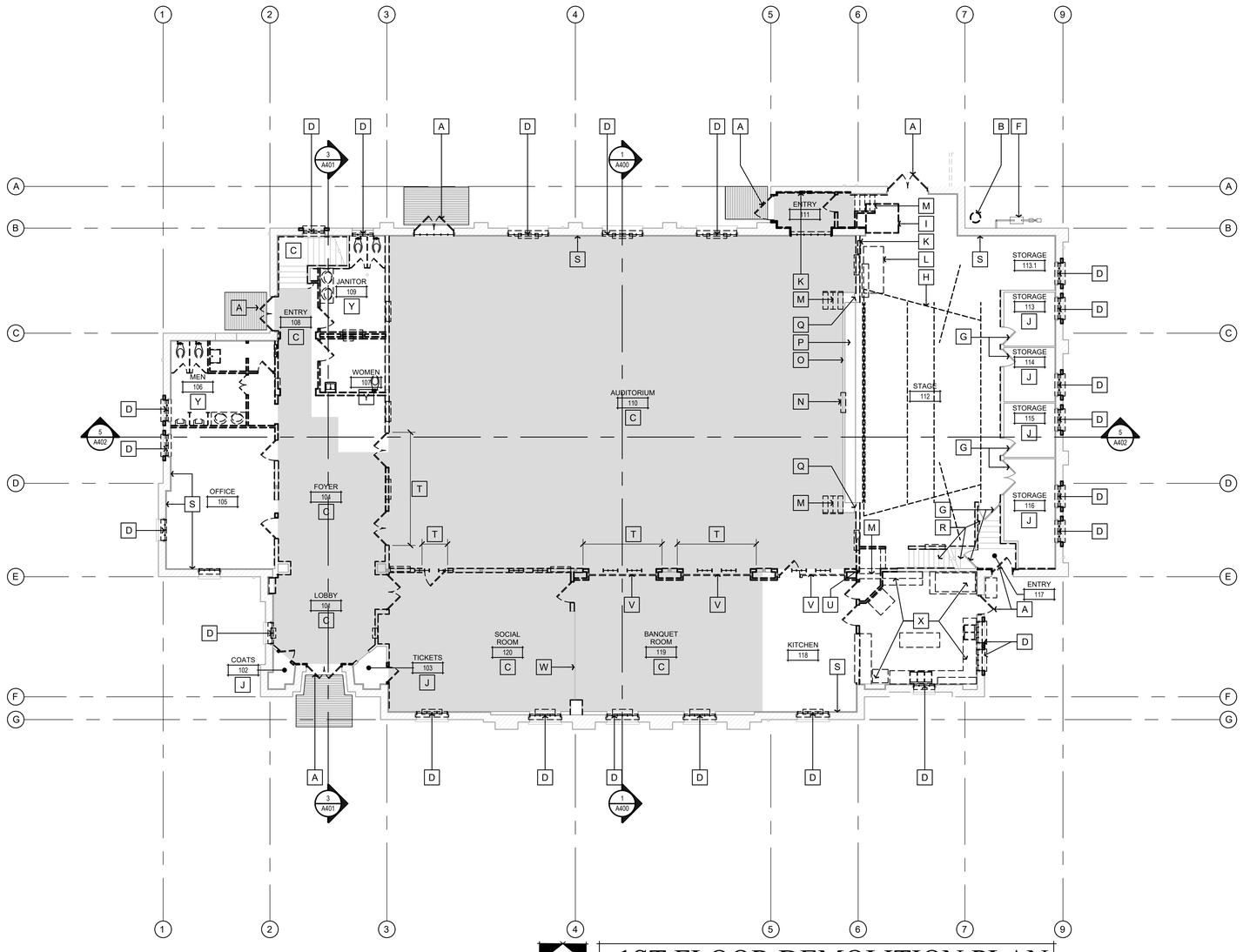

1ST FLOOR DEMOLITION PLAN

SCALE: 1/8" = 1'-0"

GENERAL NOTES

1. REMOVE ELECTRICAL SYSTEM, COMPLETE, U.N.O.
2. REMOVE MECHANICAL SYSTEM, COMPLETE, U.N.O.
3. EXTERIOR BRICK WALLS TO REMAIN, U.N.O.
4. INTERIOR WALL FRAMING TO REMAIN, U.N.O.
5. FLOOR AND ROOF FRAMING TO REMAIN, U.N.O.
6. REMOVE ALL INTERIOR FINISHES, U.N.O.
7. THE EXISTING BUILDING INCLUDES KNOWN HAZARDOUS MATERIALS. REFER TO SPECIFICATIONS FOR NESHAP SURVEY REPORT IDENTIFYING MATERIAL LOCATIONS AND ABATEMENT REQUIREMENTS.
8. FIELD-VERIFY EXISTING CONSTRUCTION DEPICTED IN THESE DRAWINGS AS IT IS UNCOVERED DURING CONSTRUCTION. NOTIFY THE COUNTY PROMPTLY IF EXISTING CONDITIONS ARE NOT AS INDICATED.
9. COORDINATE DEMOLITION WORK OF ALL DISCIPLINES WITH LOCATIONS AND DIMENSIONS OF NEW CONSTRUCTION INDICATED IN THESE DRAWINGS. PRIOR TO COMMENCING ANY DEMOLITION WORK, COORDINATE WITH APPROVED SHOP DRAWINGS AND MANUFACTURER'S DATA FOR NEW SYSTEMS, EQUIPMENT, FEATURES OF CONSTRUCTION AND TEMPORARY AND FINAL CONDITIONS AS INDICATED IN THESE DOCUMENTS.
10. DEMOLITION AND REMOVAL OF EXISTING CONSTRUCTION, FIXTURES, EQUIPMENT, AND FINISHES SHALL BE PERFORMED IN A NEAT, WORKMANLIKE MANNER, WITH CLEAN, STRAIGHT EDGES SUITABLE TO ACCOMMODATE NEW CONSTRUCTION, WHERE APPLICABLE.
11. ALL EXISTING CONSTRUCTION, FIXTURES, EQUIPMENT AND FINISHES TO REMAIN SHALL BE PROTECTED FROM DAMAGE DURING DEMOLITION AND NEW CONSTRUCTION.
12. AT WALLS TO BE REMOVED, WORK SHALL INCLUDE REMOVAL AND CAPPING OFF OF ALL MECHANICAL, PLUMBING, ELECTRICAL AND RELATED PIPING, FIXTURES, CONDUIT, CABLING AND ALL OTHER EQUIPMENT WITHIN WALLS.

SHEET NOTES

ALL ITEMS ARE EXISTING UNLESS NOTED AS NEW OR (N)

- A — REMOVE EXTERIOR, TYP.
- B — REMOVE BOILER AND FLUE
- C — HARDWOOD FLOORS TO BE REFINISHED, AREA SHOWN SHADED. PROTECT DURING DEMOLITION AND CONSTRUCTION
- D — REMOVE EXTERIOR WINDOWS, TYP.
- E — REMOVE INTERIOR DOORS, TYP. UNLESS NOTED OTHERWISE
- F — GAS METER TO REMAIN
- G — DOOR TO REMAIN
- H — REMOVE STAGE CURTAINS AND RIGGING
- I — REMOVE FLOOR FRAMING TO ACCOMMODATE NEW LIFT
- J — FINISHES TO REMAIN IN THIS ROOM
- K — REMOVE ELECTRICAL PANELS, TYP.
- L — REMOVE TANK
- M — REMOVE STAIRS
- N — REMOVE RADIANT HEATERS, TYP.
- O — TABLE STORAGE DOORS / SLIDES TO REMAIN
- P — FLIP UP STAGE LIGHTING TO REMAIN
- Q — STAGE OPENING TRIM TO REMAIN
- R — STAIRS TO REMAIN
- S — CONTRACTORS OPTION: WOOD FURRING AND INTERIOR STUCCO MAY REMAIN AT THIS WALL
- T — REMOVE SECTION OF WALL / DOOR TO ACCOMMODATE NEW DOORS
- U — POST TO REMAIN
- V — REMOVE ROLLING DOOR
- W — ROLLING DOOR TO REMAIN
- X — REMOVE KITCHEN EQUIPMENT AND CABINETS. REINSTALL EQUIPMENT IDENTIFIED ON EQUIPMENT SCHEDULE.
- Y — REMOVE RESTROOM FIXTURES, PARTITIONS, ACCESSORIES, FINISHES, COMPLETE

LEGEND

- WOOD FRAMED WALL TO REMAIN
- BRICK WALL TO REMAIN
- REMOVE WALL
- DOOR & FRAME TO BE REMOVED
- DOOR TO REMAIN
- PLUMBING FIXTURE TO BE REMOVED

Copyright © 2025
All ideas, designs, arrangements and plans indicated or represented by this drawing are owned by, and the property of, NICHOLS, MELBURG and ROSSETTO and were created, evolved and developed for use on, and in conjunction with, the specified project. None of such ideas, designs, arrangements and plans shall be used by or disclosed to any person, firm or corporation for any purpose whatsoever without the written permission of NICHOLS, MELBURG and ROSSETTO.

NICHOLS MELBURG & ROSSETTO
ARCHITECTS + ENGINEERS
300 KNOLLCREST DRIVE
REDDING, CA. 96002
(530) 222-3300 (530) 222-3538 FAX
http://www.nmrdesign.com

CONSULTANTS

LICENSE STAMPS

LICENSED ARCHITECT
KYLE MATTHEWS
C 27504
REN. 10/31/25
STATE OF CALIFORNIA

PROJECT NAME

TEHAMA COUNTY
CORNING
VETERAN'S HALL

1620 SOLANO ST.
CORNING, CA

SHEET TITLE

FIRST FLOOR
DEMOLITION PLAN

DRAWING STATUS

CONSTRUCTION
DOCUMENTS

REVISIONS

Sym.	Description	Date

Drawn By	NGG/KP
Date Issued	2/13/2025
Scale	1/8" = 1'-0"
Project No.	21-6497

SHEET No.

A101

Login Name: KenrP
Plot Date: February 13, 2025 - 8:55 am
File Name: N:\Projects\6000Cals\2021\21-6497 Tehama Co. Corning Vets Hall\Drawings\CVH - Demo Plans.dwg
Layers: A-CVH-01 / A-CVH-02 / A-CVH-03 / A-CVH-04 / Title Block

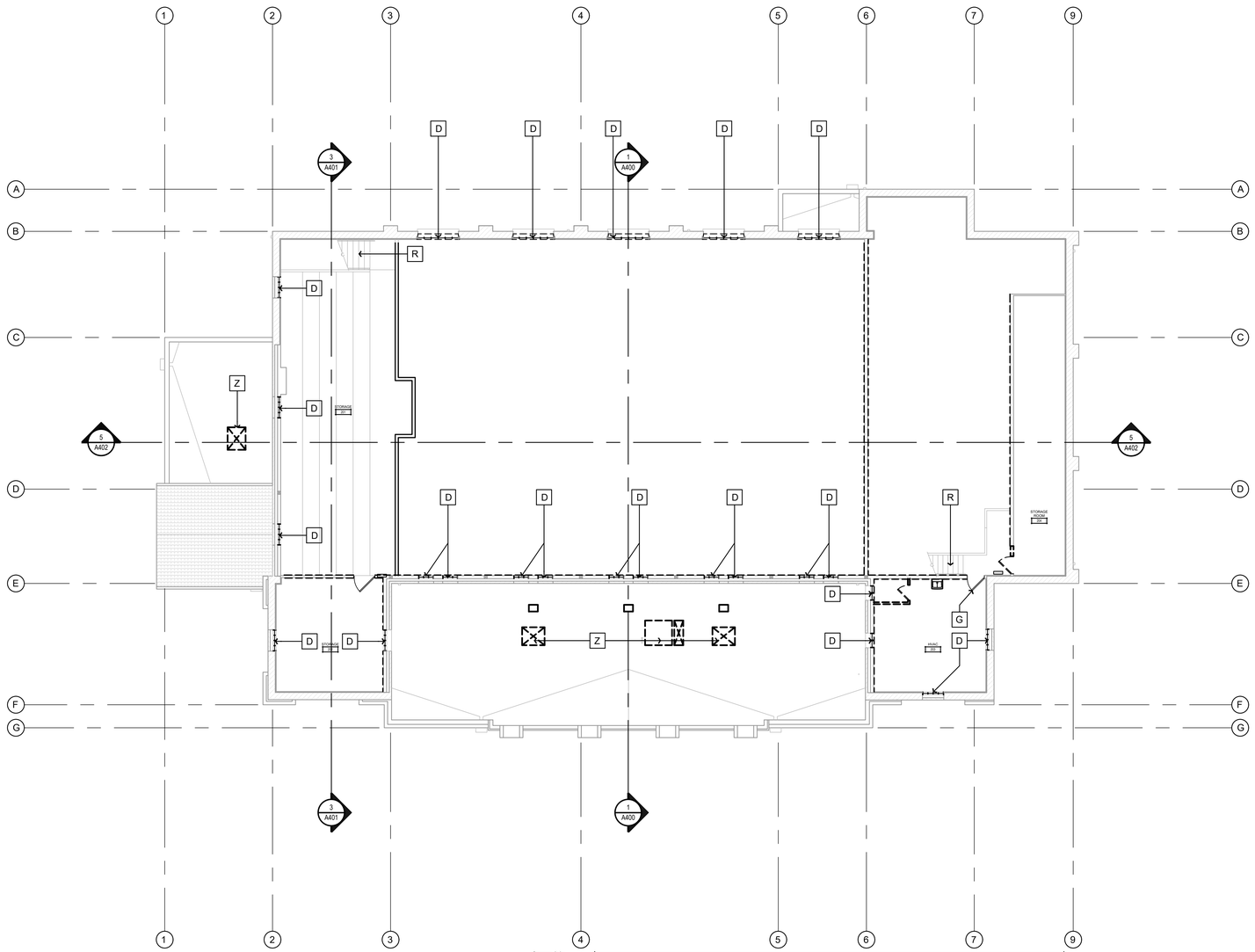

2ND FLOOR DEMOLITION PLAN

SCALE: 1/8" = 1'-0"

GENERAL NOTES

1. REMOVE ELECTRICAL SYSTEM, COMPLETE, U.N.O.
2. REMOVE MECHANICAL SYSTEM, COMPLETE, U.N.O.
3. EXTERIOR BRICK WALLS TO REMAIN, U.N.O.
4. INTERIOR WALL FRAMING TO REMAIN, U.N.O.
5. FLOOR AND ROOF FRAMING TO REMAIN, U.N.O.
6. REMOVE ALL INTERIOR FINISHES, U.N.O.
7. THE EXISTING BUILDING INCLUDES KNOWN HAZARDOUS MATERIALS. REFER TO SPECIFICATIONS FOR NESHAP SURVEY REPORT IDENTIFYING MATERIAL LOCATIONS AND ABATEMENT REQUIREMENTS.
8. FIELD-VERIFY EXISTING CONSTRUCTION DEPICTED IN THESE DRAWINGS AS IT IS UNCOVERED DURING CONSTRUCTION. NOTIFY THE COUNTY PROMPTLY IF EXISTING CONDITIONS ARE NOT AS INDICATED.
9. COORDINATE DEMOLITION WORK OF ALL DISCIPLINES WITH LOCATIONS AND DIMENSIONS OF NEW CONSTRUCTION INDICATED IN THESE DRAWINGS. PRIOR TO COMMENCING ANY DEMOLITION WORK, COORDINATE WITH APPROVED SHOP DRAWINGS AND MANUFACTURER'S DATA FOR NEW SYSTEMS, EQUIPMENT, FEATURES OF CONSTRUCTION AND TEMPORARY AND FINAL CONDITIONS AS INDICATED IN THESE DOCUMENTS.
10. DEMOLITION AND REMOVAL OF EXISTING CONSTRUCTION, FIXTURES, EQUIPMENT, AND FINISHES SHALL BE PERFORMED IN A NEAT, WORKMANLIKE MANNER, WITH CLEAN, STRAIGHT EDGES SUITABLE TO ACCOMMODATE NEW CONSTRUCTION, WHERE APPLICABLE.
11. ALL EXISTING CONSTRUCTION, FIXTURES, EQUIPMENT AND FINISHES TO REMAIN SHALL BE PROTECTED FROM DAMAGE DURING DEMOLITION AND NEW CONSTRUCTION.
12. AT WALLS TO BE REMOVED, WORK SHALL INCLUDE REMOVAL AND CAPPING OFF OF ALL MECHANICAL, PLUMBING, ELECTRICAL AND RELATED PIPING, FIXTURES, CONDUIT, CABLING AND ALL OTHER EQUIPMENT WITHIN WALLS.

SHEET NOTES

ALL ITEMS ARE EXISTING UNLESS NOTED AS NEW OR (N)

A	REMOVE EXTERIOR, TYP.
B	REMOVE BOILER AND FLUE
C	HARDWOOD FLOORS TO BE REFINISHED, AREA SHOWN SHADED. PROTECT DURING DEMOLITION AND CONSTRUCTION
D	REMOVE EXTERIOR WINDOWS, TYP.
E	REMOVE INTERIOR DOORS, TYP. UNLESS NOTED OTHERWISE
F	GAS METER TO REMAIN
G	DOOR TO REMAIN
H	REMOVE STAGE CURTAINS AND RIGGING
I	REMOVE FLOOR FRAMING TO ACCOMMODATE NEW LIFT
J	FINISHES TO REMAIN IN THIS ROOM
K	REMOVE ELECTRICAL PANELS, TYP.
L	REMOVE TANK
M	REMOVE STAIRS
N	REMOVE RADIANT HEATERS, TYP.
O	TABLE STORAGE DOORS / SLIDES TO REMAIN
P	FLIP UP STAGE LIGHTING TO REMAIN
Q	STAGE OPENING TRIM TO REMAIN
R	STAIRS TO REMAIN
S	CONTRACTORS OPTION: WOOD FURRING AND INTERIOR STUCCO MAY REMAIN AT THIS WALL
T	REMOVE SECTION OF WALL / DOOR TO ACCOMMODATE NEW DOORS
U	POST TO REMAIN
V	REMOVE ROLLING DOOR
W	ROLLING DOOR TO REMAIN
X	REMOVE KITCHEN EQUIPMENT AND CABINETS. REINSTALL EQUIPMENT IDENTIFIED ON EQUIPMENT SCHEDULE.
Y	REMOVE RESTROOM FIXTURES, PARTITIONS, ACCESSORIES, FINISHES, COMPLETE
Z	REMOVE HVAC EQUIPMENT, TYP.

LEGEND

- WOOD FRAMED WALL TO REMAIN
- BRICK WALL TO REMAIN
- REMOVE WALL
- DOOR & FRAME TO BE REMOVED
- DOOR TO REMAIN
- PLUMBING FIXTURE TO BE REMOVED

Copyright © 2025

All ideas, designs, arrangements and plans indicated or represented by this drawing are owned by, and the property of, NICHOLS, MELBURG and ROSSETTO and were created, evolved and developed for use on, and in conjunction with, the specified project. None of such ideas, designs, arrangements and plans shall be used by or disclosed to any person, firm or corporation for any purpose whatsoever without the written permission of NICHOLS, MELBURG and ROSSETTO.

NICHOLS MELBURG & ROSSETTO
ARCHITECTS + ENGINEERS
300 KNOLLCREST DRIVE
REDDING, CA. 96002
(530) 222-3300 (530) 222-3538 FAX
http://www.nmrdesign.com

CONSULTANTS

LICENSE STAMPS

LICENSED ARCHITECT
KYLE MATTHEWS
C 27504
REN. 10/31/25
STATE OF CALIFORNIA

PROJECT NAME

TEHAMA COUNTY
CORNING
VETERAN'S HALL

1620 SOLANO ST.
CORNING, CA

SHEET TITLE

SECOND FLOOR
DEMOLITION PLAN

DRAWING STATUS

CONSTRUCTION
DOCUMENTS

REVISIONS

Sym.	Description	Date

Drawn By	NGG/KP
Date Issued	2/13/2025
Scale	1/8" = 1'-0"
Project No.	21-6497

SHEET No.

A102

Login Name: KenerP
Plot Date: February 13, 2025 - 8:57 am
File Name: K:\Projects\6000Cals\2021\21-6497 Tehama Co. Corning Vets Hall\Drawings\CVH - Demo FP2.dwg
XREFS: XCVHFB2, XCVHFB3, XCVHGRID, XCVHCLB, title block

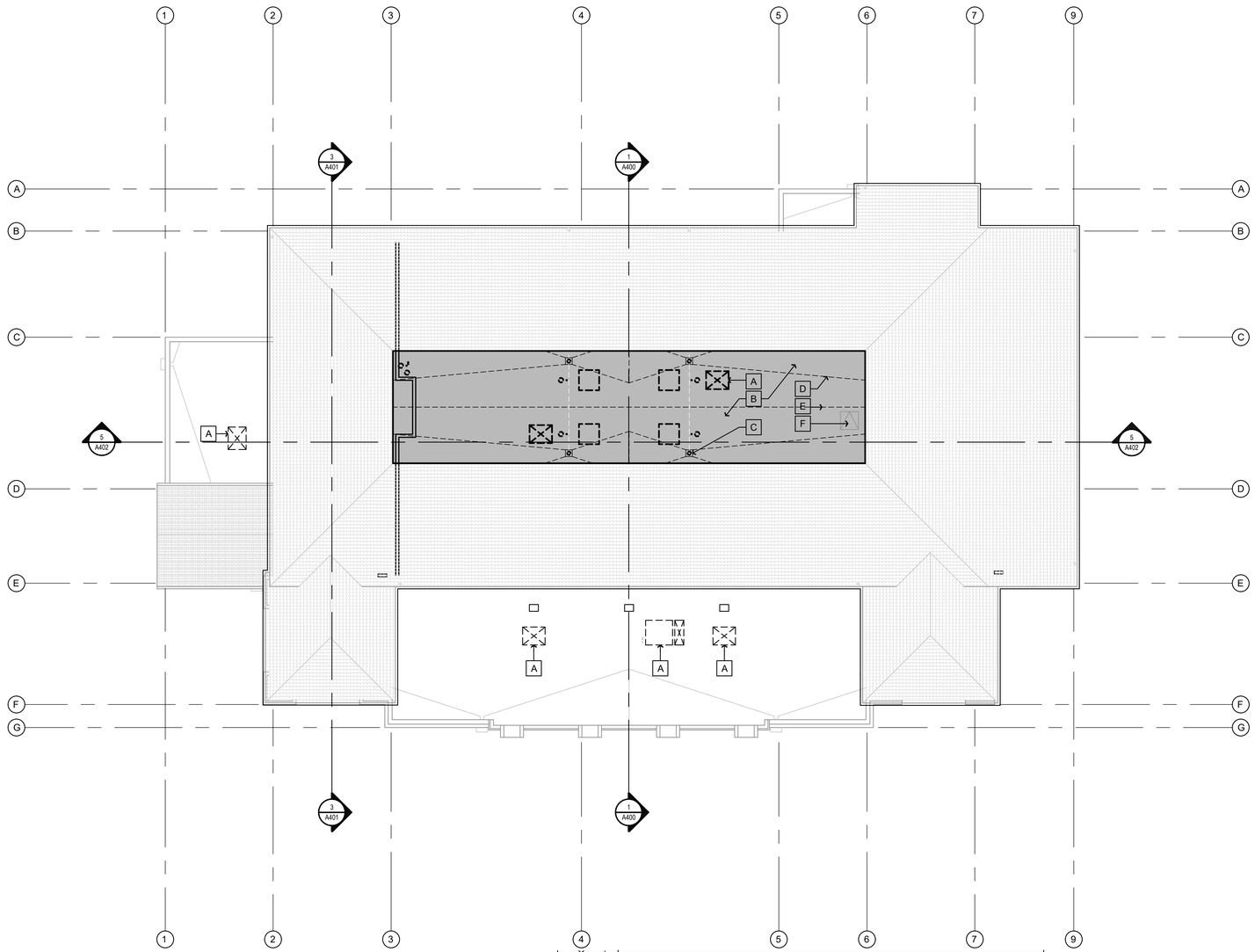

ROOF DEMOLITION PLAN

SCALE: 1/8" = 1'-0"

GENERAL NOTES

1. CONTRACTOR TO PROTECT AND PRESERVE EXISTING BUILDING STRUCTURE AND EXISTING FINISHES THAT ARE TO REMAIN IN PLACE.

SHEET NOTES

ALL ITEMS ARE EXISTING UNLESS NOTED AS NEW OR (N)

- A REMOVE HVAC UNIT, TYPICAL
- B REMOVE SINGLE PLY ROOFING AT UPPER ROOF, TYPICAL
- C REMOVE ROOF DRAIN
- D REMOVE CANT SYSTEM
- E EXISTING RIDGE
- F EXISTING ROOF HATCH TO REMAIN
- G
- H

LEGEND

SPANISH TILE ROOF TO REMAIN

Copyright © 2025

All ideas, designs, arrangements and plans indicated or represented by this drawing are owned by, and the property of, NICHOLS, MELBURG and ROSSETTO and were created, evolved and developed for use on, and in conjunction with, the specified project. None of such ideas, designs, arrangements and plans shall be used by or disclosed to any person, firm or corporation for any purpose whatsoever without the written permission of NICHOLS, MELBURG and ROSSETTO.

NICHOLS MELBURG ROSSETTO
ARCHITECTS + ENGINEERS
300 KNOLLCREST DRIVE
REDDING, CA. 96002
(530) 222-3300 (530) 222-3538 FAX
http://www.nmrdesign.com

CONSULTANTS

LICENSE STAMPS

LICENSED ARCHITECT
KYLE MATTHEWS
C 27504
REN. 10/31/25
STATE OF CALIFORNIA

PROJECT NAME

TEHAMA COUNTY
CORNING
VETERAN'S HALL

1620 SOLANO ST.
CORNING, CA

SHEET TITLE

OVERALL DEMO ROOF PLAN

DRAWING STATUS

CONSTRUCTION DOCUMENTS

REVISIONS

Sym.	Description	Date

Drawn By	NGG/KP
Date Issued	2/13/2025
Scale	1/8" = 1'-0"
Project No.	21-6497

SHEET No.

A120

Login Name: KeiryP
Plot Date: February 13, 2025 - 8:58 am
File Name: N:\Projects\6000-AA\2021\6497 Tehama Co. Corning Vets Hall\Drawings\CVH - Demo Roof.dwg
JOB\SB - ACAD_Title Block X-CVH.dwg\ - X-CVH-ARCH\ - X-CVH-ARCH

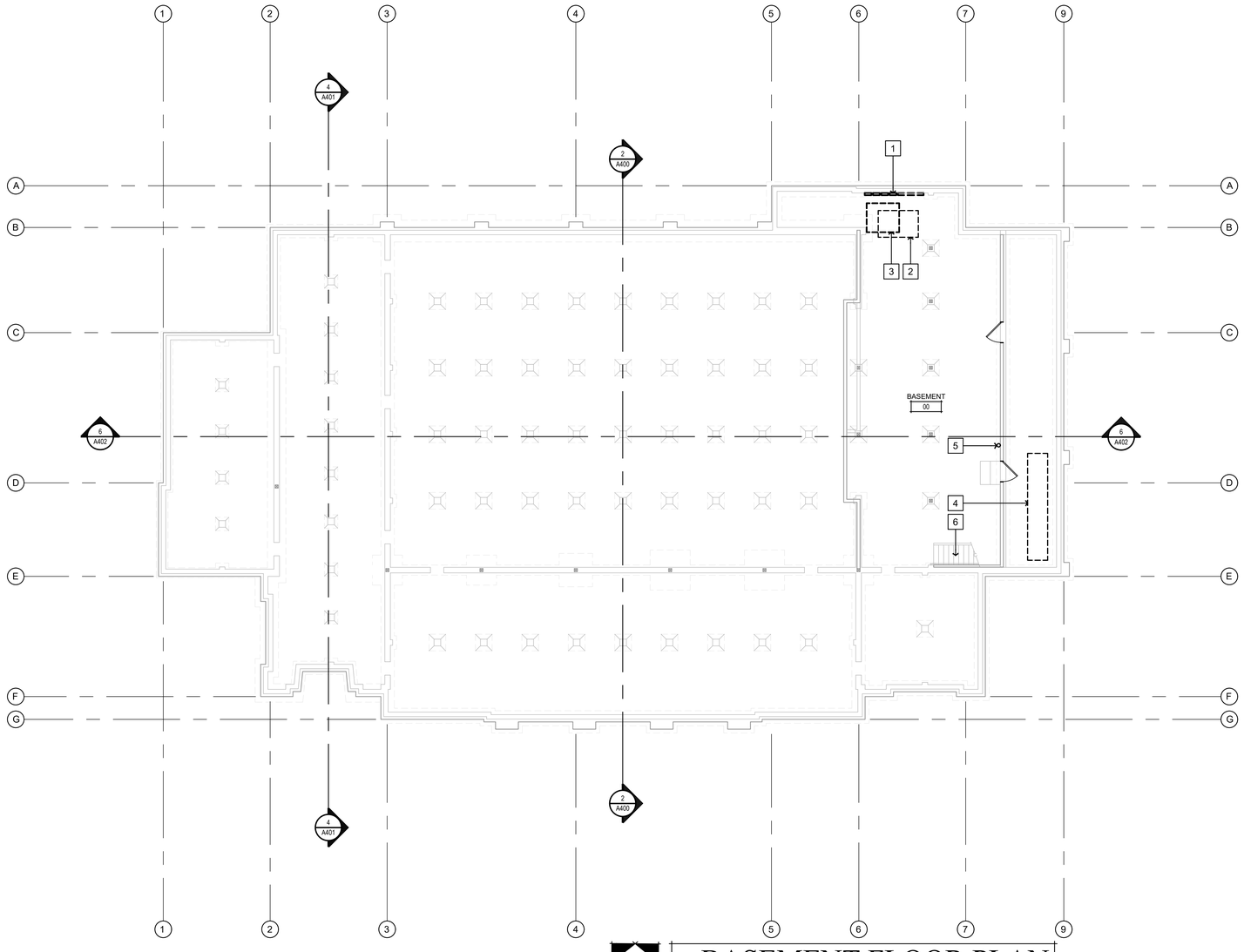

BASEMENT FLOOR PLAN

SCALE: 1/8" = 1'-0"

SHEET NOTES

ALL ITEMS ARE EXISTING UNLESS NOTED AS NEW OR (N)

1. MAIN SWITCH GEAR AND DISTRIBUTION PANELS. REMOVE ELECTRICAL SYSTEMS, COMPETE.
2. REMOVE BOILER SYSTEM, COMPETE.
3. REPLACE FLOOR FRAMING AT NEW LIFT
4. AREA OF STRUCTURAL RETROFIT.
5. (N) FIRE EXTINGUISHER ON WALL BRACKET
6. STAIRS TO REMAIN

Copyright © 2025

All ideas, designs, arrangements and plans indicated or represented by this drawing are owned by, and the property of, NICHOLS, MELBURG and ROSSETTO and were created, evolved and developed for use on, and in conjunction with, the specified project. None of such ideas, designs, arrangements and plans shall be used by or disclosed to any person, firm or corporation for any purpose whatsoever without the written permission of NICHOLS, MELBURG and ROSSETTO.

NICHOLS MELBURG & ROSSETTO
ARCHITECTS + ENGINEERS
300 KNOLLCREST DRIVE
REDDING, CA. 96002
(530) 222-3300 (530) 222-3538 FAX
http://www.nmrdesign.com

CONSULTANTS

LICENSE STAMPS

LICENSED ARCHITECT
KYLE MATTHEWS
C 27504
REN. 10/31/25
STATE OF CALIFORNIA

PROJECT NAME

TEHAMA COUNTY
CORNING
VETERAN'S HALL

1620 SOLANO ST.
CORNING, CA

SHEET TITLE

BASEMENT FLOOR PLAN

DRAWING STATUS

CONSTRUCTION DOCUMENTS

REVISIONS

Sym.	Description	Date

Drawn By	NGG/KP
Date Issued	2/13/2025
Scale	1/8" = 1'-0"
Project No.	21-6497

SHEET No.

A200

Login Name: KeithP
Plot Date: February 13, 2025 - 9:01 am
File Name: N:\Projects\6000Series\2021\6497 Tehama Co. Corning Vets Hall\Drawings\CKH - R\Dwg
Layout: A-CKH-R01 X-CKH-R01 X-CKH-R02 X-CKH-R03 X-CKH-L Title Block:

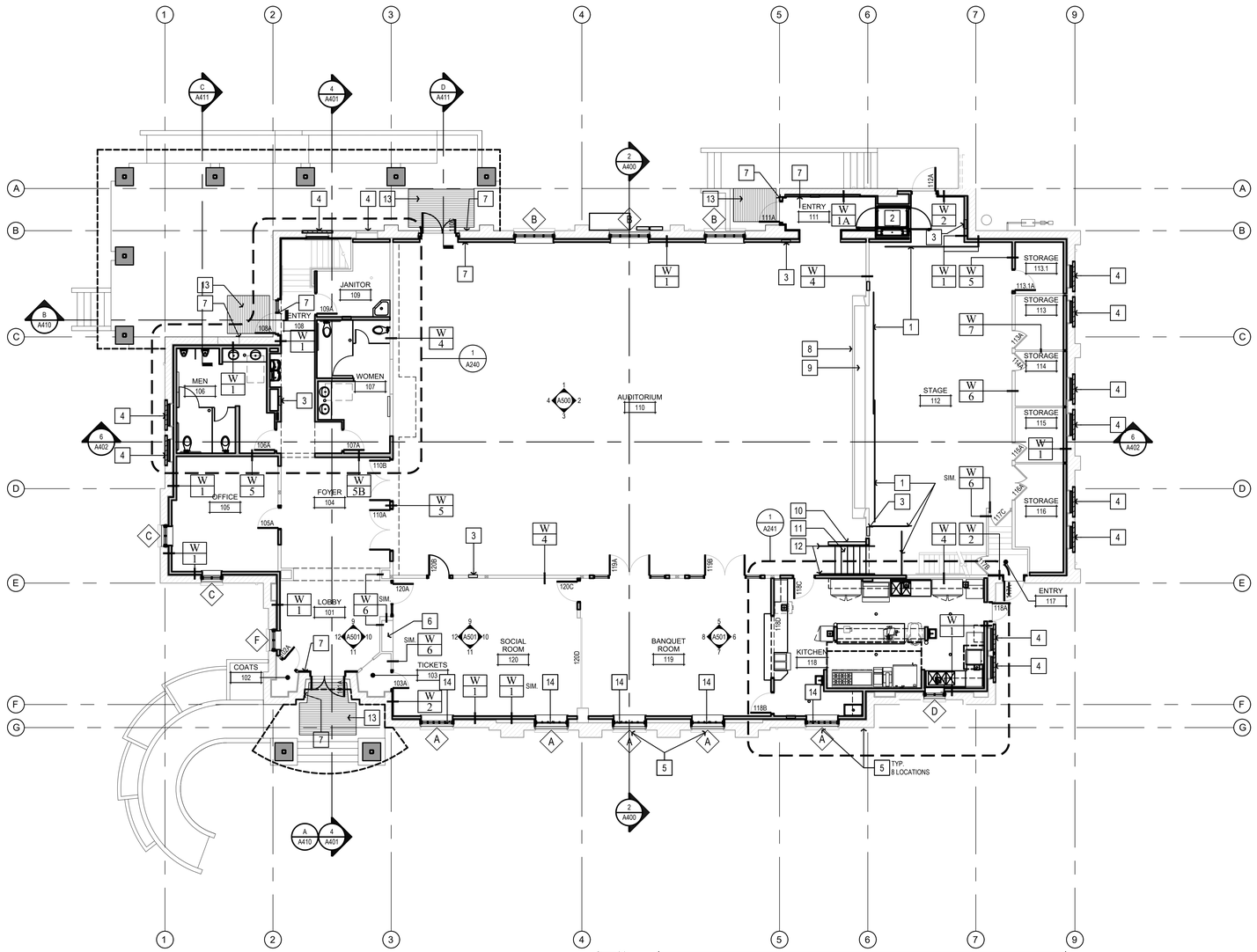

FIRST FLOOR PLAN

SCALE: 1/8" = 1'-0"

SHEET NOTES

ALL ITEMS ARE NEW UNLESS NOTED AS EXISTING OR (E)

1. STAGE CURTAINS
2. ACCESSIBLE LIFT
3. FIRE EXTINGUISHER CABINET
4. BRICK INFILL AT WINDOWS TO BE REMOVED
5. EXTERIOR WALL CRACK REPAIR, SEE DETAIL 3/S410 FOR ADDITIONAL INFORMATION
6. DISPLAY CASE
7. DOOR OPERATOR CONTROL, HIGH AND LOW ACTIVATORS
8. (E) UNDER STAGE STORAGE DOORS TO REMAIN
9. (E) FLIP UP STAGE LIGHTING SYSTEM TO REMAIN
10. LOW WALL WITH WOOD PANELING
11. STAIRS
12. 1 1/2" DIA. STEEL HANDRAIL
13. WALK-OFF MAT
14. 10" x 4" x 3/8" ANGLE SUPPORT AT HEAD AND JAMBS OF ARCH TOP WINDOWS, TYPICAL. 1/2" EPOXY ANCHORS AT 24" O.C. TO EXISTING BRICK.

LEGEND

NOTE:

1. REFER TO DRAWING A720 FOR TYPICAL CONSTRUCTION ASSEMBLIES.
2. REFER TO THE LEGEND BELOW FOR TYPICAL GRAPHIC DESIGNATIONS
3. ALL INTERIOR WALLS WHICH SEPARATE ROOMS / AREAS HAVING ROOM NUMBERS WHICH DIFFER FROM OTHER ROOMS / AREAS HAVING ROOM NUMBERS SHALL RECEIVE 3-1/2" THICK PREFORMED MINERAL FIBER ACOUSTICAL INSULATION IN STUD CAVITIES.

(E) WOOD FRAMED WALL TO REMAIN

(E) BRICK WALL TO REMAIN

NEW WOOD WALL OR FURRING — W/X WALL ASSEMBLY DESIGNATION

DOOR TO REMAIN

DOOR AND FRAME WITH DOOR TAG (SEE DOOR SCHEDULE)

WINDOW (SEE WINDOW SCHEDULE)

PLUMBING FIXTURE

DRINKING FOUNTAIN

Copyright © 2025

All ideas, designs, arrangements and plans indicated or represented by this drawing are owned by, and the property of, NICHOLS, MELBURG and ROSSETTO and were created, evolved and developed for use on, and in conjunction with, the specified project. None of such ideas, designs, arrangements and plans shall be used by or disclosed to any person, firm or corporation for any purpose whatsoever without the written permission of NICHOLS, MELBURG and ROSSETTO.

NICHOLS MELBURG & ROSSETTO
ARCHITECTS + ENGINEERS
300 KNOLLCREST DRIVE
REDDING, CA. 96002
(530) 222-3300 (530) 222-3538 FAX
http://www.nmrdesign.com

CONSULTANTS

LICENSE STAMPS

LICENSED ARCHITECT KYLE MATTHEWS C 27504 REN. 10/31/25 STATE OF CALIFORNIA

PROJECT NAME

TEHAMA COUNTY CORNING VETERAN'S HALL

1620 SOLANO ST.
CORNING, CA

SHEET TITLE

FIRST FLOOR PLAN

DRAWING STATUS

CONSTRUCTION DOCUMENTS

REVISIONS

Sym.	Description	Date

Drawn By	NGG/KP
Date Issued	2/13/2025
Scale	1/8" = 1'-0"
Project No.	21-6497

SHEET No.

A201

Login Name: Kyle M.
Plot Date: February 13, 2025 - 10:24 am
File Name: N:\Projects\60000Due\60270-21-6497 Tehama Co. Corning Vets Hall\Drawings\CH1 - 1F.dwg
PSNFS: C:\CAD_Lib\Plot Styles\ - 1-Floor Plan - CONFORM.ctb

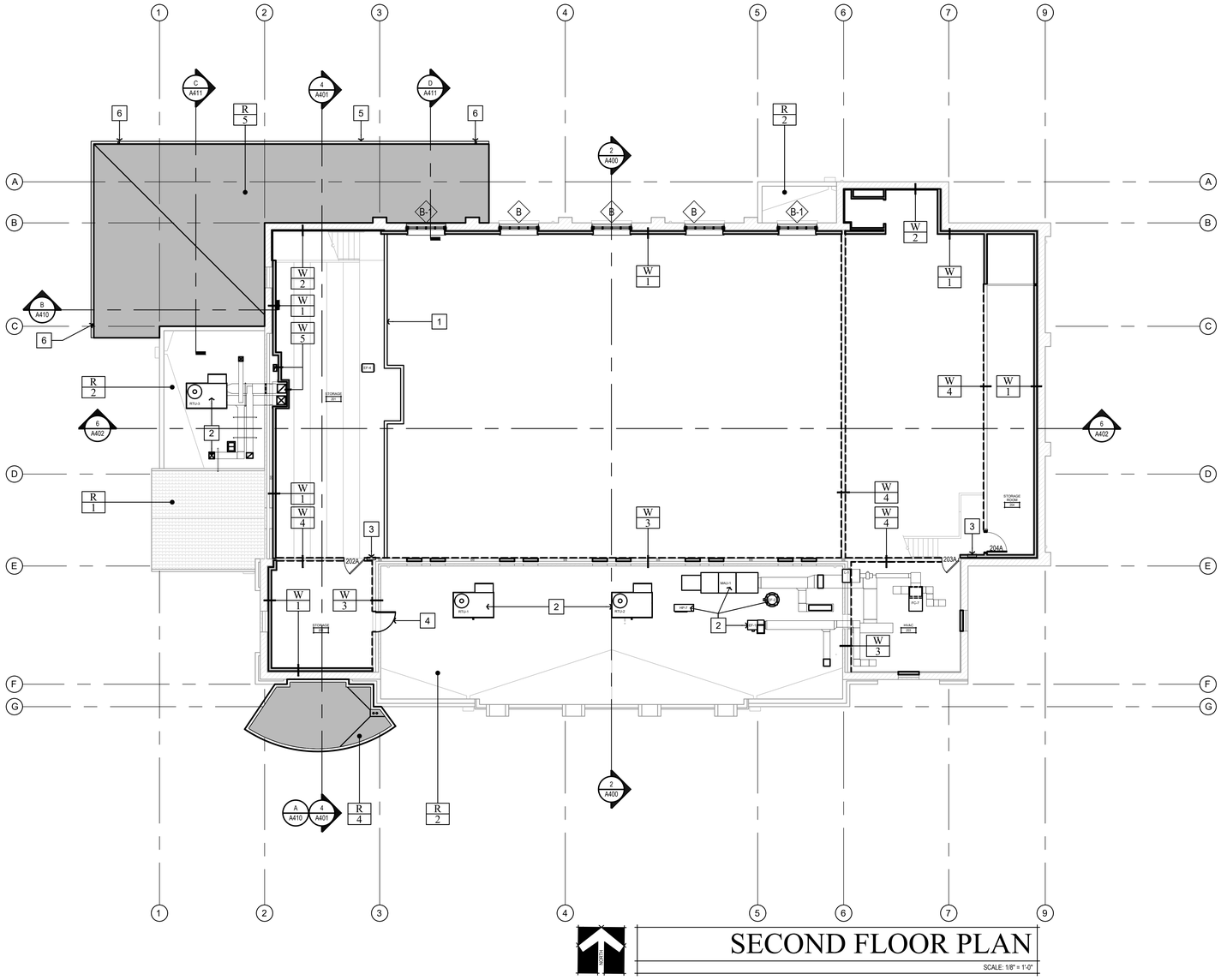

SECOND FLOOR PLAN

SCALE: 1/8" = 1'-0"

SHEET NOTES

ALL ITEMS ARE NEW UNLESS NOTED AS EXISTING OR (E)

1. WOOD WALL CAP TO ALIGN WITH TRIM AT ACOUSTICAL PANELS
2. ROOF MOUNTED HVAC EQUIPMENT. ADD FOAM CRICKETS AND PATCH ROOFING.
3. FIRE EXTINGUISHER CABINET
4. ROOF ACCESS DOOR
5. GUTTER SYSTEM
6. 3" GALV. PIPE RAINWATER LEADER

LEGEND

NOTE:

1. REFER TO DRAWING A720 FOR TYPICAL CONSTRUCTION ASSEMBLIES.
2. REFER TO THE LEGEND BELOW FOR TYPICAL GRAPHIC DESIGNATIONS
3. ALL INTERIOR WALLS WHICH SEPARATE ROOMS / AREAS HAVING ROOM NUMBERS WHICH DIFFER FROM OTHER ROOMS / AREAS HAVING ROOM NUMBERS SHALL RECEIVE 3-1/2" THICK PREFORMED MINERAL FIBER ACOUSTICAL INSULATION IN STUD CAVITIES.

(E) WOOD FRAMED WALL TO REMAIN

(E) BRICK WALL TO REMAIN

NEW WOOD WALL OR FURRING — W/X WALL ASSEMBLY DESIGNATION

DOOR TO REMAIN

110A DOOR AND FRAME WITH DOOR TAG (SEE DOOR SCHEDULE)

B WINDOW (SEE WINDOW SCHEDULE)

PLUMBING FIXTURE

DRINKING FOUNTAIN

Copyright © 2025

All ideas, designs, arrangements and plans indicated or represented by this drawing are owned by, and the property of, NICHOLS, MELBURG and ROSSETTO and were created, evolved and developed for use on, and in conjunction with, the specified project. None of such ideas, designs, arrangements and plans shall be used by or disclosed to any person, firm or corporation for any purpose whatsoever without the written permission of NICHOLS, MELBURG and ROSSETTO.

NICHOLS MELBURG & ROSSETTO
ARCHITECTS + ENGINEERS
300 KNOLLCREST DRIVE
REDDING, CA. 96002
(530) 222-3300 (530) 222-3538 FAX
http://www.nmrdesign.com

CONSULTANTS

LICENSE STAMPS

LICENSED ARCHITECT KYLE MATTHEWS C 27504 REN. 10/31/25 STATE OF CALIFORNIA

PROJECT NAME

TEHAMA COUNTY
CORNING
VETERAN'S HALL

1620 SOLANO ST.
CORNING, CA

SHEET TITLE

SECOND FLOOR PLAN AND LOWER ROOF PLAN

DRAWING STATUS

CONSTRUCTION DOCUMENTS

REVISIONS

Sym.	Description	Date

Drawn By	NGG/KP
Date Issued	2/13/2025
Scale	1/8" = 1'-0"
Project No.	21-6497

SHEET No.

A202

Login Name: KenrP
Plot Date: February 13, 2025 - 9:04 am
File Name: N:\Projects\2000\Cwk\2021\6497 Tehama Co. Corning Vets Hall\Drawings\CVH - 1620Ag
Plotted In: KCVH.PMP - KCVH.CTB - KCVH_Title Block

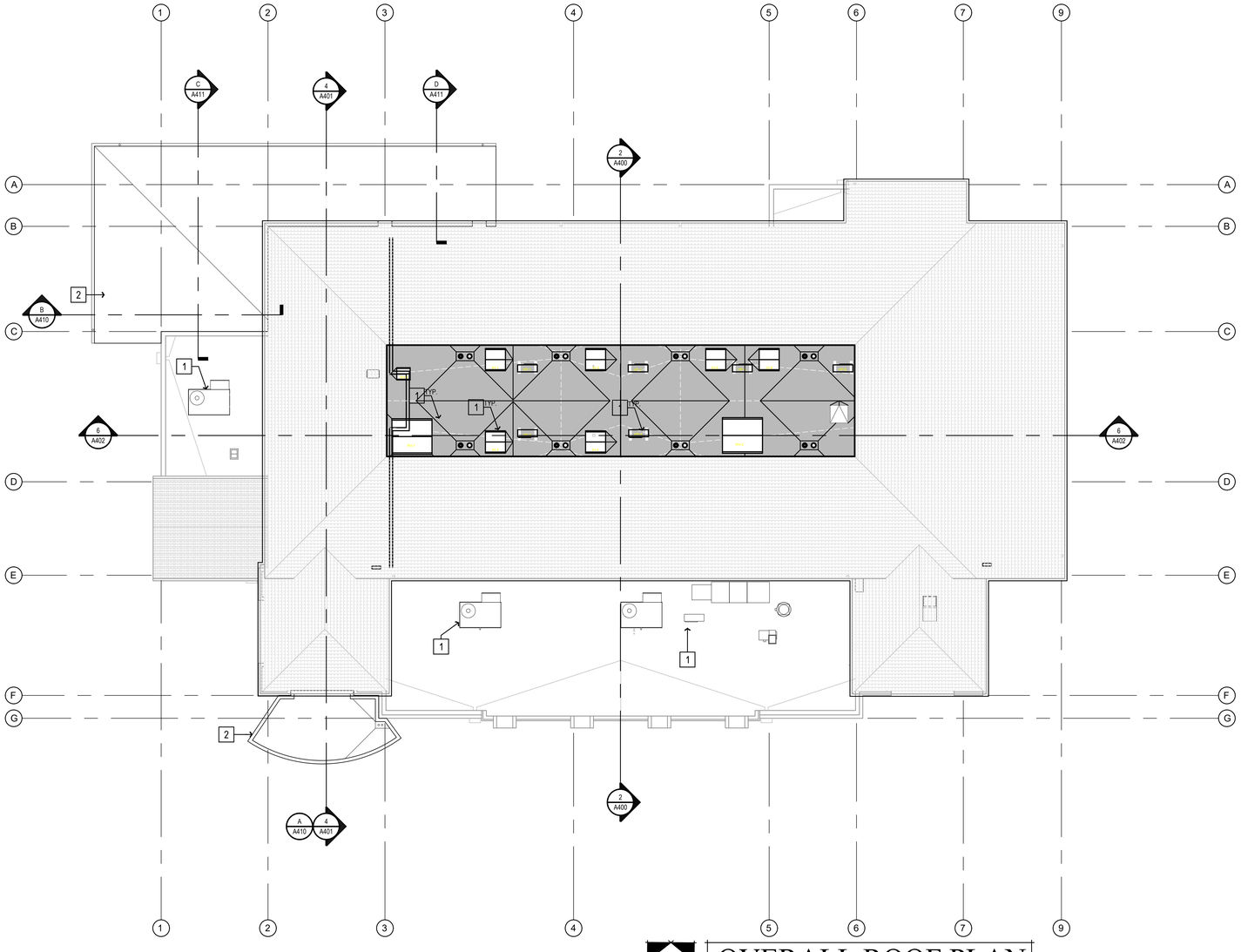

NORTH

OVERALL ROOF PLAN

SCALE: 1/8" = 1'-0"

SHEET NOTES

ALL ITEMS ARE NEW UNLESS NOTED AS EXISTING OR (E)

1 (N) HVAC UNIT. SEE MECHANICAL DRAWINGS FOR ADDITIONAL INFORMATION.

2 (N) PARAPET.

LEGEND

(E) ROOF

(N) ROOF

Copyright © 2025

All ideas, designs, arrangements and plans indicated or represented by this drawing are owned by, and the property of, NICHOLS, MELBURG and ROSSETTO and were created, evolved and developed for use on, and in conjunction with, the specified project. None of such ideas, designs, arrangements and plans shall be used by or disclosed to any person, firm or corporation for any purpose whatsoever without the written permission of NICHOLS, MELBURG and ROSSETTO.

NICHOLS MELBURG & ROSSETTO
ARCHITECTS + ENGINEERS
300 KNOLLCREST DRIVE
REDDING, CA. 96002
(530) 222-3300 (530) 222-3538 FAX
http://www.nmrdesign.com

CONSULTANTS

LICENSE STAMPS

LICENSED ARCHITECT
KYLE MATTHEWS
C 27504
REN. 10/31/25
STATE OF CALIFORNIA

PROJECT NAME

TEHAMA COUNTY
CORNING
VETERAN'S HALL

1620 SOLANO ST.
CORNING, CA

SHEET TITLE

ROOF PLAN

DRAWING STATUS

CONSTRUCTION DOCUMENTS

REVISIONS

Sym.	Description	Date

Drawn By	NGG/KP
Date Issued	2/13/2025
Scale	1/8" = 1'-0"
Project No.	21-6497

SHEET No.

A220

Login Name: KeithP
Plot Date: February 13, 2025 - 9:05 am
File Name: N:\Projects\6000\Active\2021\6497 Tehama Co. Corning Vets Hall\Drawings\CVH ROOF.dwg
Layout: A-CVH-Roof 1-CVH-R2 1-CVH-L1 Title Block 1-CVH-R2

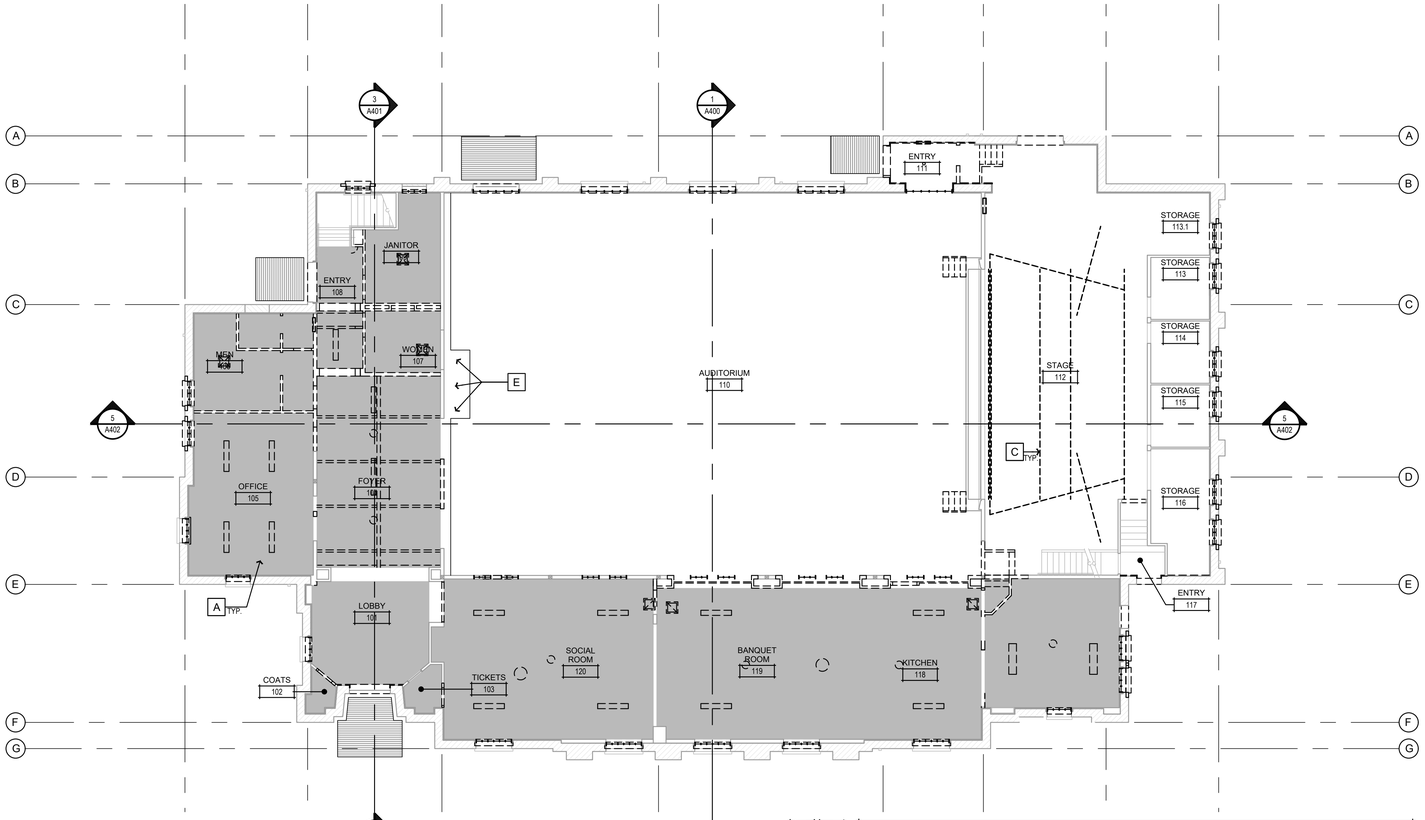

1ST FLOOR DEMOLITION RCP

SCALE: 1/8" = 1'-0"

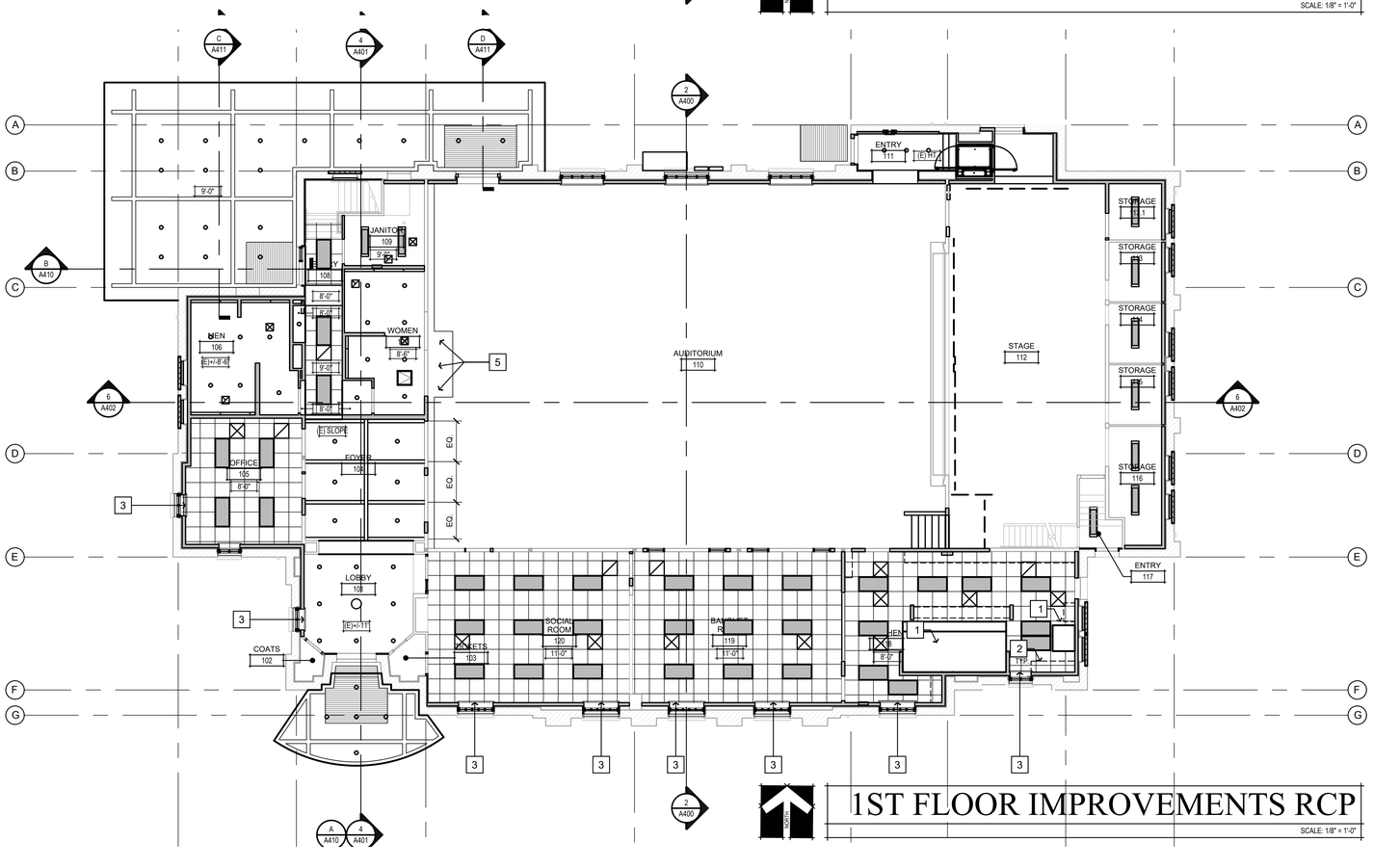

1ST FLOOR IMPROVEMENTS RCP

SCALE: 1/8" = 1'-0"

GENERAL NOTES

1. REMOVE ELECTRICAL SYSTEM, COMPLETE, U.N.O.
2. REMOVE MECHANICAL SYSTEM, COMPLETE, U.N.O.
3. REMOVE ALL CEILINGS, U.N.O.

DEMOLITION SHEET NOTES

ALL ITEMS ARE EXISTING UNLESS NOTED AS NEW OR (N)

- A — REMOVE GYP. CEILING
- B — REMOVE CELOTEX CEILING
- C — REMOVE STAGE CURTAIN
- D — REMOVE AND REINSTALL CHANDELIER
- E — CORBELS TO REMAIN

DEMOLITION PLAN LEGEND

- DEMO (E) HVAC EQUIPMENT
- DEMO (E) LIGHT FIXTURE
- (E) CEILING TO REMAIN

SHEET NOTES

ALL ITEMS ARE NEW, UNLESS NOTED AS (E) OR EXISTING

1. KITCHEN HOOD
2. UPPER CABINETS
3. MANUAL ROLLER SHADE - SEE DETAIL 2 / A910.
4. MOTORIZED ROLLER SHADE - SEE DETAIL 1 / A910.
5. EXISTING CORBELS

LEGEND

ALL ITEMS ARE NEW, UNLESS NOTED AS (E) OR EXISTING

- 5/8" GYPSUM BOARD CEILING SYSTEM
- 2 x 2 SUSPENDED ACOUSTICAL TILE CEILING SYSTEM, SEE DETAIL 3/A902
- 2 x 4 RECESSED LED LIGHT FIXTURE
- 1 x 4 SUSPENDED LED LIGHT FIXTURE
- CAN LIGHT FIXTURE
- RELOCATED (E) CHANDELIER
- NEW FAN

Copyright © 2025
All ideas, designs, arrangements and plans indicated or represented by this drawing are owned by, and the property of, NICHOLS, MELBURG and ROSSETTO and were created, evolved and developed for use on, and in conjunction with, the specified project. None of such ideas, designs, arrangements and plans shall be used by or disclosed to any person, firm or corporation for any purpose whatsoever without the written permission of NICHOLS, MELBURG and ROSSETTO.

NICHOLS MELBURG & ROSSETTO
ARCHITECTS + ENGINEERS
300 KNOLLCREST DRIVE
REDDING, CA. 96002
(530) 222-3300 (530) 222-3538 FAX
http://www.nmrdesign.com

CONSULTANTS

LICENSE STAMPS

LICENSED ARCHITECT
KYLE MATTHEWS
C 27504
REN. 10/31/25
STATE OF CALIFORNIA

PROJECT NAME

TEHAMA COUNTY
CORNING
VETERAN'S HALL

1620 SOLANO ST.
CORNING, CA

SHEET TITLE

FIRST FLOOR
REFLECTED CEILING
PLANS

DRAWING STATUS

CONSTRUCTION
DOCUMENTS

REVISIONS

Sym.	Description	Date

Drawn By	KP
Date Issued	2/13/2025
Scale	1/8" = 1'-0"
Project No.	21-6497

SHEET No.

A231

Login Name: KelvinP
Plot Date: February 13, 2025 - 9:07 am
File Name: N:\Projects\6000Series\6207\21-6497 Tehama Co. Corning Vets Hall\Drawings\CAH-RCP.dwg
Layers: A-CH-FLL, Title Block, I-New RCP 1, I-CH-HK, I-New RCP 2, I-CH-Fixtures, I-CH-RCP 1, I-CH-GRID 1 Demo RCP 1, I-Demo RCP 2

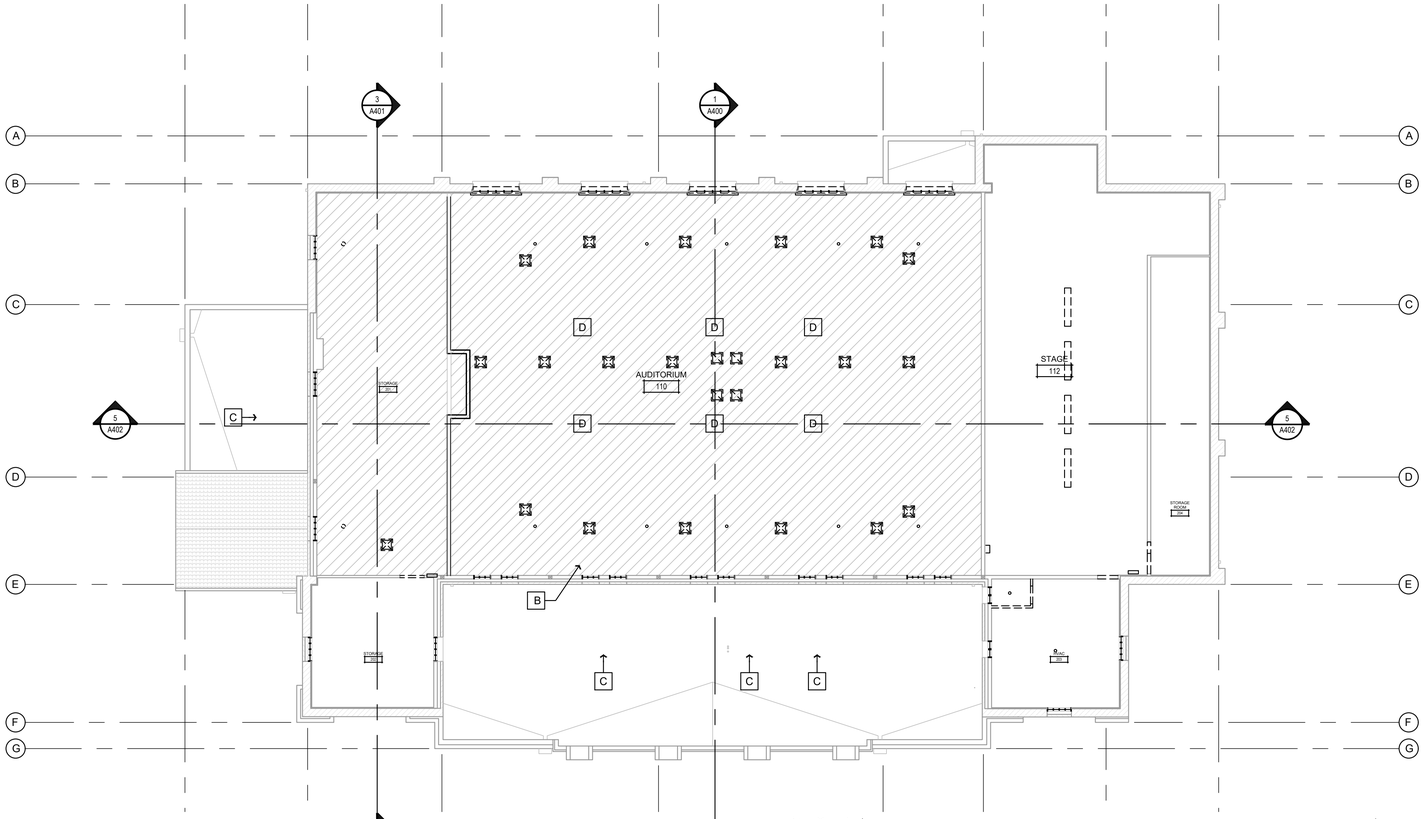

2ND FLOOR DEMOLITION RCP

SCALE: 1/8" = 1'-0"

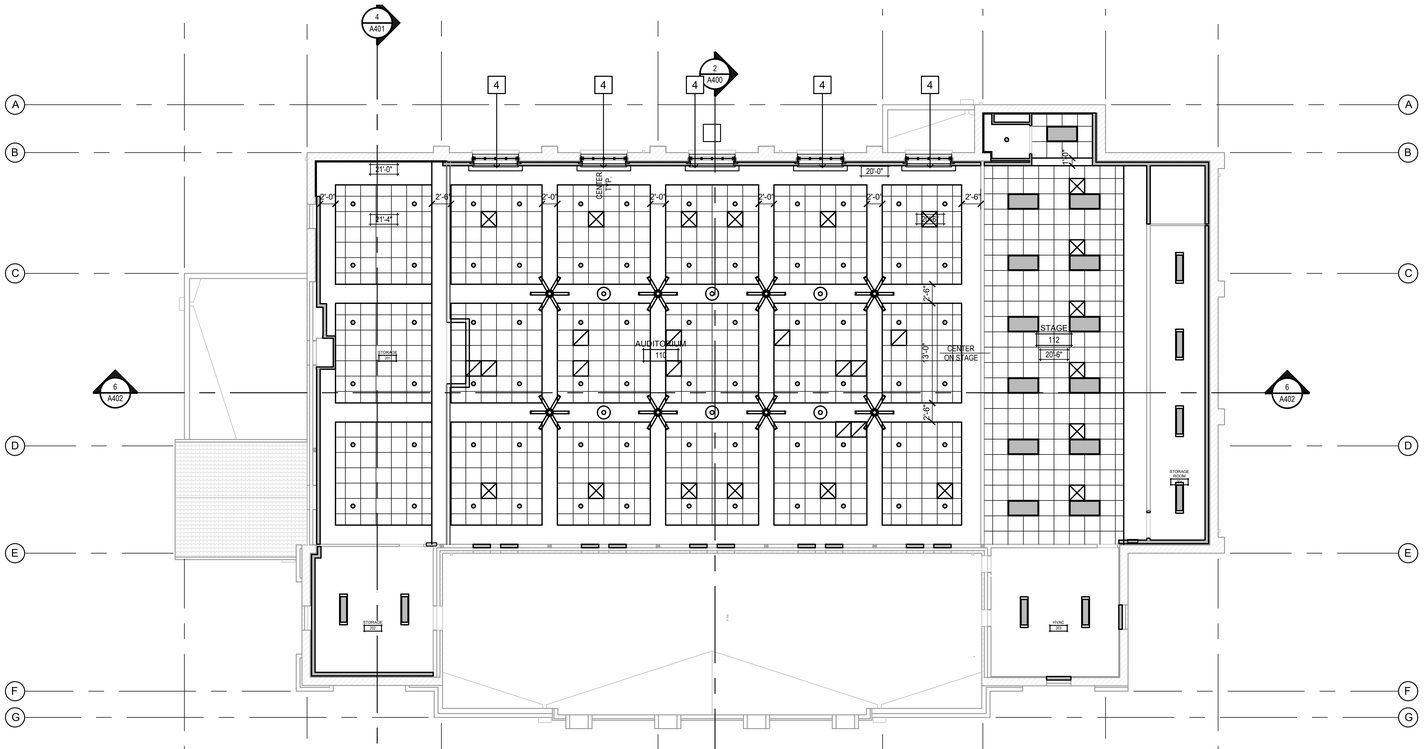

2ND FLOOR IMPROVEMENTS RCP

SCALE: 1/8" = 1'-0"

GENERAL NOTES

1. REMOVE ELECTRICAL SYSTEM, COMPLETE, U.N.O.
2. REMOVE MECHANICAL SYSTEM, COMPLETE, U.N.O.
3. REMOVE ALL CEILINGS, U.N.O.

DEMOLITION SHEET NOTES

ALL ITEMS ARE EXISTING UNLESS NOTED AS NEW OR (N)

- A — REMOVE GYP. CEILING
- B — REMOVE CELOTEX CEILING
- C — REMOVE STAGE CURTAIN
- D — REMOVE AND REINSTALL CHANDELIER

DEMOLITION PLAN LEGEND

- DEMO (E) HVAC EQUIPMENT
- DEMO (E) LIGHT FIXTURE
- (E) CEILING TO REMAIN

SHEET NOTES

ALL ITEMS ARE NEW, UNLESS NOTED AS (E) OR EXISTING

1. KITCHEN HOOD
2. UPPER CABINETS
3. MANUAL ROLLER SHADE - SEE DETAIL 2 / A910.
4. MOTORIZED ROLLER SHADE - SEE DETAIL 1 / A910.

LEGEND

ALL ITEMS ARE NEW, UNLESS NOTED AS (E) OR EXISTING

- 5/8" GYPSUM BOARD CEILING SYSTEM
- 2 x 2 SUSPENDED ACOUSTICAL TILE CEILING SYSTEM
- 2 x 4 RECESSED LED LIGHT FIXTURE
- 1 x 4 SUSPENDED LED LIGHT FIXTURE
- CAN LIGHT FIXTURE
- RELOCATED (E) CHANDELIER
- NEW FAN

Copyright © 2025

All ideas, designs, arrangements and plans indicated or represented by this drawing are owned by, and the property of, NICHOLS, MELBURG and ROSSETTO and were created, evolved and developed for use on, and in conjunction with, the specified project. None of such ideas, designs, arrangements and plans shall be used by or disclosed to any person, firm or corporation for any purpose whatsoever without the written permission of NICHOLS, MELBURG and ROSSETTO.

NICHOLS MELBURG & ROSSETTO
ARCHITECTS + ENGINEERS
300 KNOLLCREST DRIVE
REDDING, CA. 96002
(530) 222-3300 (530) 222-3538 FAX
http://www.nmrdesign.com

CONSULTANTS

LICENSE STAMPS

LICENSED ARCHITECT
KYLE MATTHEWS
C 27504
REN. 10/31/25
STATE OF CALIFORNIA

PROJECT NAME

TEHAMA COUNTY
CORNING
VETERAN'S HALL

1820 SOLANO ST.
CORNING, CA

SHEET TITLE

SECOND FLOOR
REFLECTED CEILING
PLANS

DRAWING STATUS

CONSTRUCTION
DOCUMENTS

REVISIONS

Sym.	Description	Date

Drawn By	KP
Date Issued	2/13/2025
Scale	1/8" = 1'-0"
Project No.	21-6497

SHEET No.

A232

Login Name: KelvinP
Plot Date: February 13, 2025 - 9:09 am
File Name: N:\Projects\6000Series\6200\21-6497 Tehama Co. Corning Vets Hall\Drawings\CAH-RCP.dwg
XREFS: XCAD_Title Block, Xlem RCP-1, XCAH-FP-1, Xlem RCP-2, XCAH-Fixtures-1, XCAH-RP-1, XCAH-GRID 1 Demo RCP 1 1 Demo RCP 2

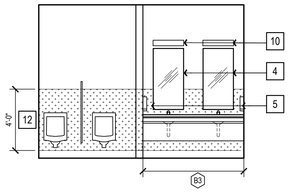

1 106 MEN - NORTH
1/4" = 1'-0"

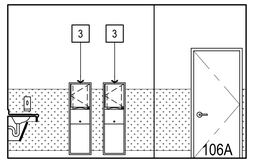

2 106 MEN - EAST
1/4" = 1'-0"

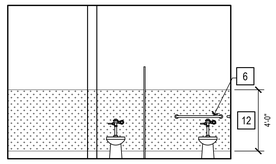

3 106 MEN - SOUTH
1/4" = 1'-0"

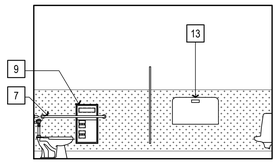

4 106 MEN - WEST
1/4" = 1'-0"

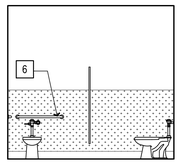

5 107 WOMEN - NORTH
1/4" = 1'-0"

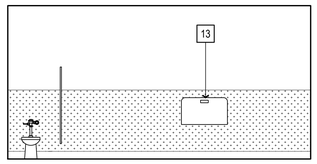

6 107 WOMEN - EAST
1/4" = 1'-0"

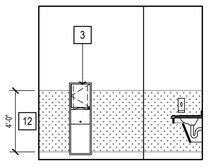

7 107 WOMEN - SOUTH
1/4" = 1'-0"

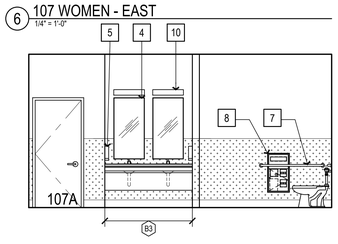

8 107 WOMEN - WEST
1/4" = 1'-0"

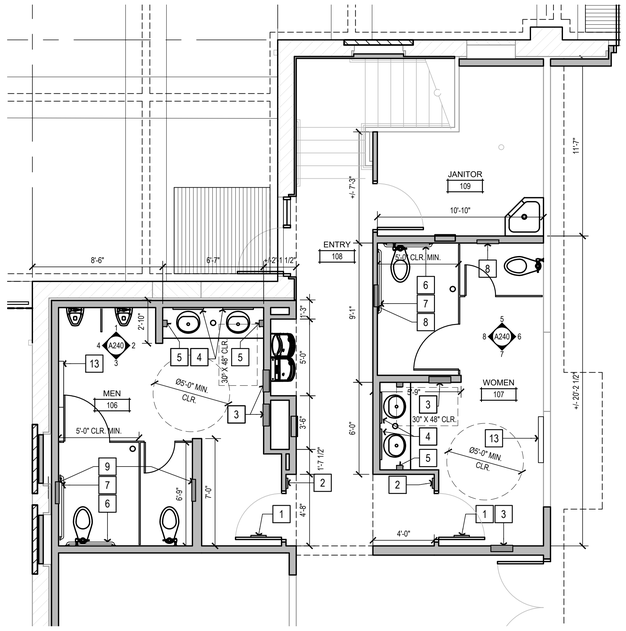

ENLARGED RESTROOM FLOOR PLAN

SCALE: 1/4" = 1'-0"

SHEET NOTES

ALL ITEMS ARE NEW, UNLESS NOTED AS (E) OR EXISTING

1	ACCESSIBLE TOILET ROOM DOOR SIGN PER A/A960
2	ACCESSIBLE TOILET ROOM SIGN PER B/A960
3	RECESS PAPER TOWEL DISPENSER/TRASH RECEPTACLE
4	MIRROR 24"W X 48"T
5	SURFACE MOUNTED SOAP DISPENSER
6	42" GRAB BAR
7	48" GRAB BAR
8	RECESSED SANITARY NAPKIN DISPOSAL & TOILET TISSUE DISPENSER
9	RECESSED SEAT-COVER DISPENSER & TOILET TISSUE DISPENSER
10	VANITY LIGHT
11	FIRE EXTINGUISHER CABINET
12	FIBER REINFORCED LAMINATE
13	BABY CHANGING STATION

LEGEND

- (E) WALL
- (N) WALL
- (N) DOOR & FRAME
- DOOR TO REMAIN
- (N) PLUMBING FIXTURE

Copyright © 2025
All ideas, designs, arrangements and plans indicated or represented by this drawing are owned by, and the property of, NICHOLS, MELBURG and ROSSETTO and were created, evolved and developed for use on, and in conjunction with, the specified project. None of such ideas, designs, arrangements and plans shall be used by or disclosed to any person, firm or corporation for any purpose whatsoever without the written permission of NICHOLS, MELBURG and ROSSETTO.

NICHOLS MELBURG ROSSETTO
ARCHITECTS + ENGINEERS
300 KNOLLCREST DRIVE
REDDING, CA. 96002
(530) 222-3300 (530) 222-3538 FAX
http://www.nmrdesign.com

CONSULTANTS

LICENSE STAMPS

LICENSED ARCHITECT
KYLE MATTHEWS
C 27504
REN. 10/31/25
STATE OF CALIFORNIA

PROJECT NAME

TEHAMA COUNTY
CORNING
VETERAN'S HALL

1620 SOLANO ST.
CORNING, CA

SHEET TITLE

ENLARGED RESTROOM FLOOR PLAN & INTERIOR ELEVATIONS

DRAWING STATUS

CONSTRUCTION DOCUMENTS

REVISIONS

Sym.	Description	Date

Drawn By	KP
Date Issued	2/13/2025
Scale	1/4" = 1'-0"
Project No.	21-6497

SHEET No.

A240

Login Name: KenwP
Plot Date: February 13, 2025 - 9:11 am
File Name: N:\Projects\6000\Job\2021\6497 Tehama Co. Corning Vets Hall\Drawings\CCH ENLG FLR.dwg
PAPER: 24"X36"(1:1) CHL: File Size: 1.4 CHF:0.82

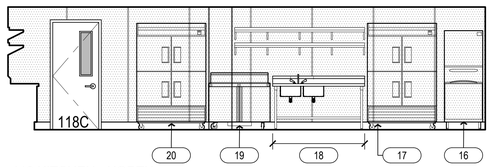

9 118 KITCHEN - NORTH
1/4" = 1'-0"

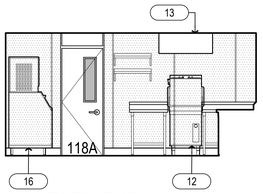

10 118 KITCHEN - EAST
1/4" = 1'-0"

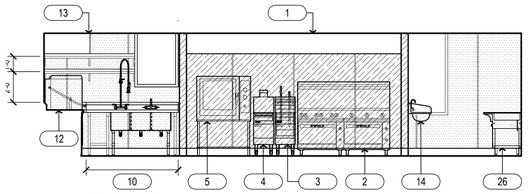

11 118 KITCHEN - SOUTH
1/4" = 1'-0"

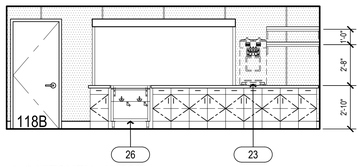

12 118 KITCHEN - WEST
1/4" = 1'-0"

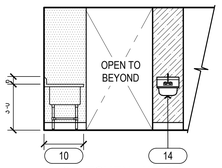

13 118 KITCHEN - WEST
1/4" = 1'-0"

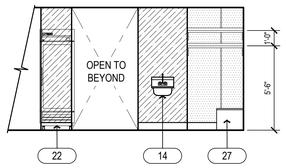

14 118 KITCHEN - EAST
1/4" = 1'-0"

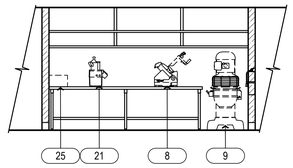

15 118 KITCHEN - NORTH
1/4" = 1'-0"

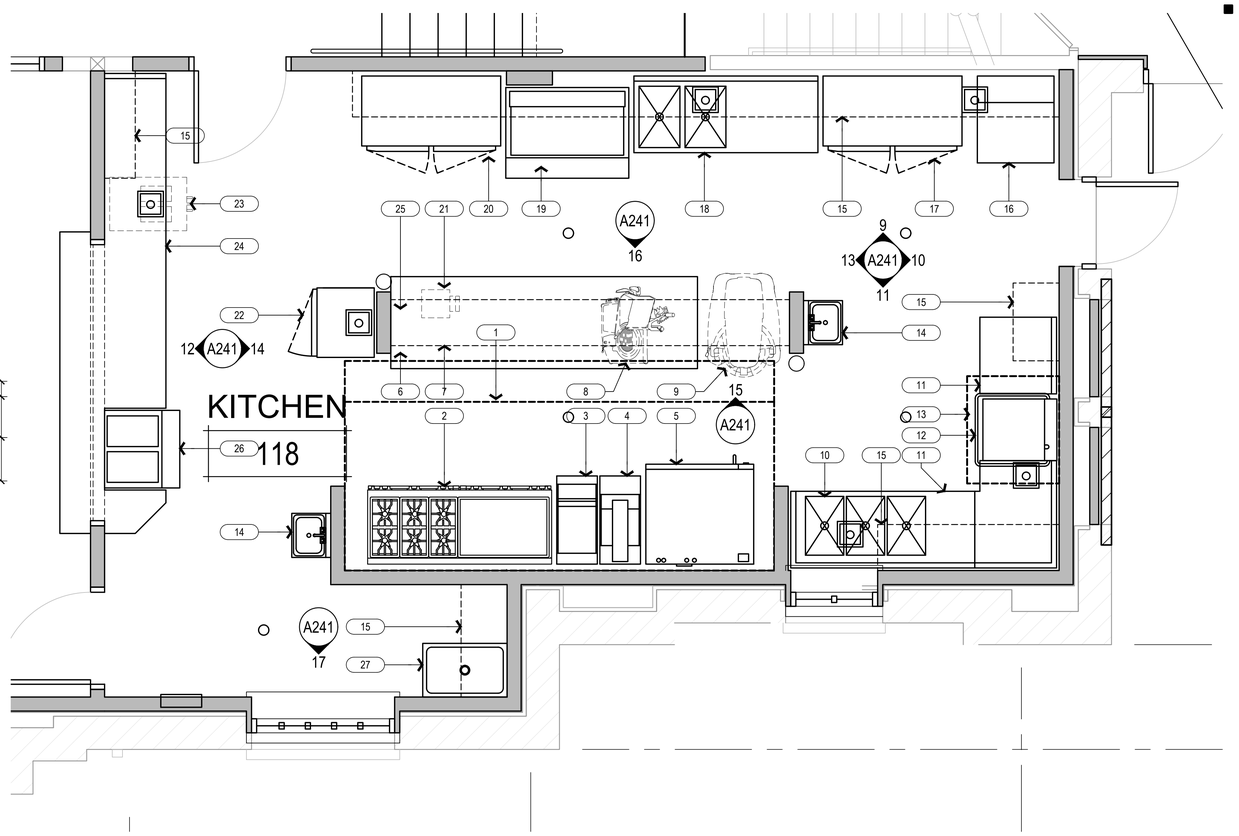

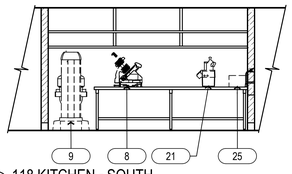

16 118 KITCHEN - SOUTH
1/4" = 1'-0"

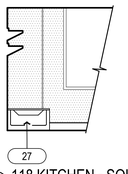

17 118 KITCHEN - SOUTH
1/4" = 1'-0"

ENLARGED KITCHEN FLOOR PLAN

SCALE: 1/2" = 1'-0"

EQUIPMENT SCHEDULE

ITEM	QTY	DESCRIPTION	MANUFACTURER	MODEL NUMBER	NOTES	UTILITY REQUIREMENTS			
						ELECTRIC	GAS	WATER	WASTE
1	1	HOOD, 12' LONG WITH INTEGRAL ANSUL SYSTEM	SEE MECHANICAL DRAWINGS	SEE MECHANICAL DRAWINGS		●			
2	1	RANGE (E)	WOLF	C72SS-6B36GN	OFCI	●	●		
3	1	FRYER	PITCO	SE148		●			
4	1	FRY DUMPSTATION	PITCO	BNB-SE14		●			
5	1	COMBI OVEN	VULCAN	ABC7G-NAT	OFCI	●	●		
6	1	10' x 3' STAINLESS STEEL TABLE (SHELF BELOW)	CUSTOM FABRICATED	SEE ELEVATIONS					
7	1	13' x 18" STAINLESS STEEL SHELVES	CUSTOM FABRICATED	SEE ELEVATIONS					
8	1	MEAT SLICER	HOBART	HS9	NIC	●			
9	1	STAND MIXER	HOBART	LEGACY HL600 MIXER	NIC	●			
10	1	3 COMPARTMENT SINK	ADVANCE TABCO	FC-3-2424				●	●
11	2	30" DEEP STAINLESS STEEL COUNTER	CUSTOM FABRICATED	SEE ELEVATIONS					
12	1	DISHWASHER	HOBART	CDL-1	OFCI	●		●	●
13	1	TYPE II HOOD	SEE MECHANICAL DRAWINGS	SEE MECHANICAL DRAWINGS		●			
14	2	HAND WASHING SINK	EAGLE	HSAN-10-F-LRS				●	●
15	5	18" DEEP STAINLESS STEEL SHELVES, WALL MOUNTED	CUSTOM FABRICATED	SEE ELEVATIONS					
16	1	ICE MAKER W/ BIN (NUGGET)	MANITOWOC	RNF-1100A/D570		●		●	●
17	1	FREEZER	TRUE	TS-49F-4-HC		●			
18	1	PREP SINK	CUSTOM FABRICATED	SEE ELEVATIONS				●	●
19	1	DELI STATION	DELFIELD	4448NP-18M		●			
20	1	REFRIGERATOR	TRUE	TS-49-A-HC		●			
21	1	FOOD PROCESSOR	ROBOT COUPE	R602	NIC	●			
22	1	BEVERAGE REFRIGERATOR	TRUE	T-19G-HC~FGD01		●			
23	1	ICE CREAM MACHINE	SPACEMAN	6235-C	NIC	●			●
24	1	STAINLESS STEEL COUNTERTOP	CUSTOM FABRICATED	SEE ELEVATIONS					
25	1	WARMING STATION	AVANTCO	177W50	NIC	●			
26	1	HOT FOOD SERVING COUNTER	DUKE	E302SW	OFCI	●			
27	1	JANITOR SINK	SEE PLUMBING DRAWINGS	SEE PLUMBING DRAWINGS				●	●

Copyright © 2025

All ideas, designs, arrangements and plans indicated or represented by this drawing are owned by, and the property of, NICHOLS, MELBURG and ROSSETTO and were created, evolved and developed for use on, and in conjunction with, the specified project. None of such ideas, designs, arrangements and plans shall be used, by or disclosed to any person, firm or corporation for any purpose whatsoever without the written permission of NICHOLS, MELBURG and ROSSETTO.

NICHOLS MELBURG ROSSETTO
ARCHITECTS + ENGINEERS
300 KNOLLCREST DRIVE
REDDING, CA. 96002
(530) 222-3300 (530) 222-3538 FAX
http://www.nmrdesign.com

CONSULTANTS

LICENSE STAMPS

LICENSED ARCHITECT
KYLE MATTHEWS
C 27504
REN. 10/31/25
STATE OF CALIFORNIA

PROJECT NAME

TEHAMA COUNTY
CORNING
VETERAN'S HALL

1620 SOLANO ST.
CORNING, CA

SHEET TITLE

ENLARGED KITCHEN FLOOR PLAN & INTERIOR ELEVATIONS

DRAWING STATUS

CONSTRUCTION DOCUMENTS

REVISIONS

Sym.	Description	Date

Drawn By	KP
Date Issued	2/13/2025
Scale	AS NOTED
Project No.	21-6497

SHEET No.

A241

Login Name: KenneP
Plot Date: February 13, 2025 - 9:12 am
File Name: N:\Projects\6000Jobs\22\21-6497 Tehama Co. Corning Vets Hall\Drawings\CVH ENLG FLP.dwg
Plotted by KCVH161 | CVH_Title Block X-CVH.DWG

SHEET NOTES

1. INFILL (E) WINDOW
2. INFILL PORTION OF (E) DOOR
3. ACCESSIBLE RAMP
4. GUARDRAIL NOT SHOWN FOR CLARITY, SEE PARTIAL ELEVATION

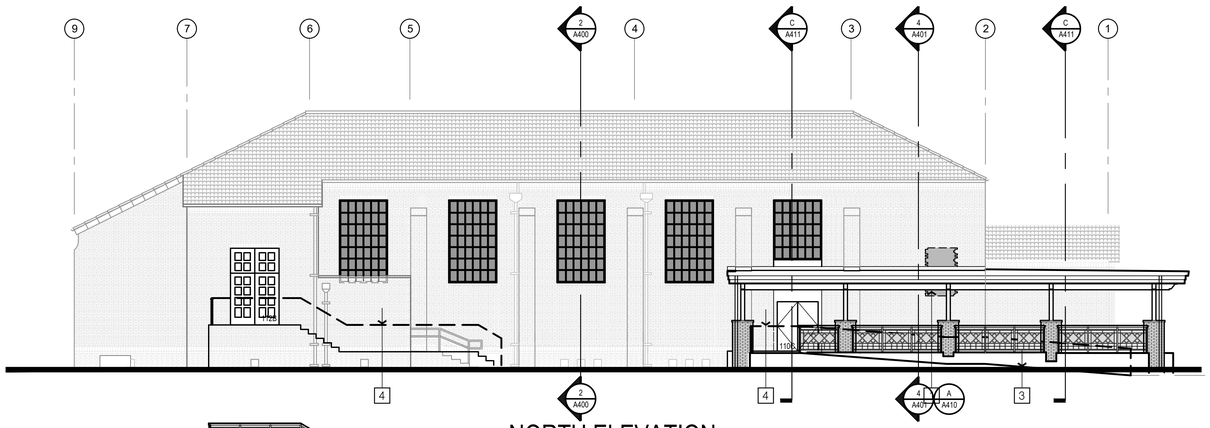

NORTH ELEVATION

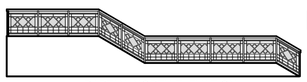

PARTIAL NORTH ELEVATION

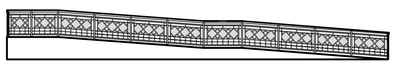

PARTIAL NORTH ELEVATION

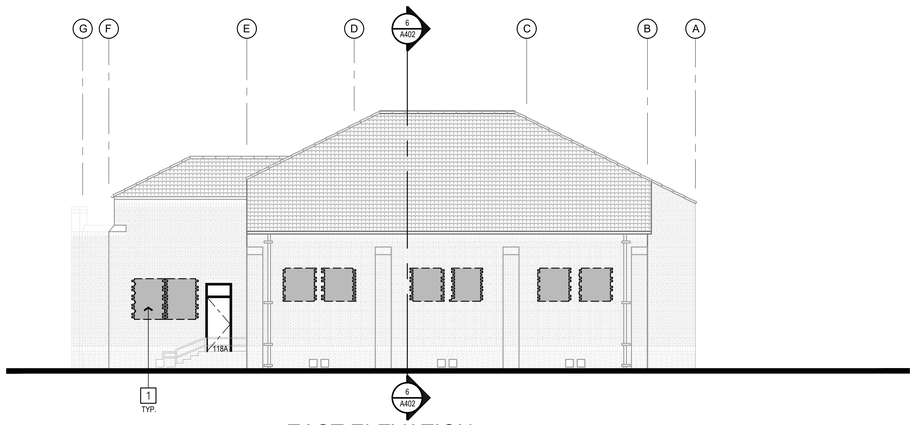

EAST ELEVATION

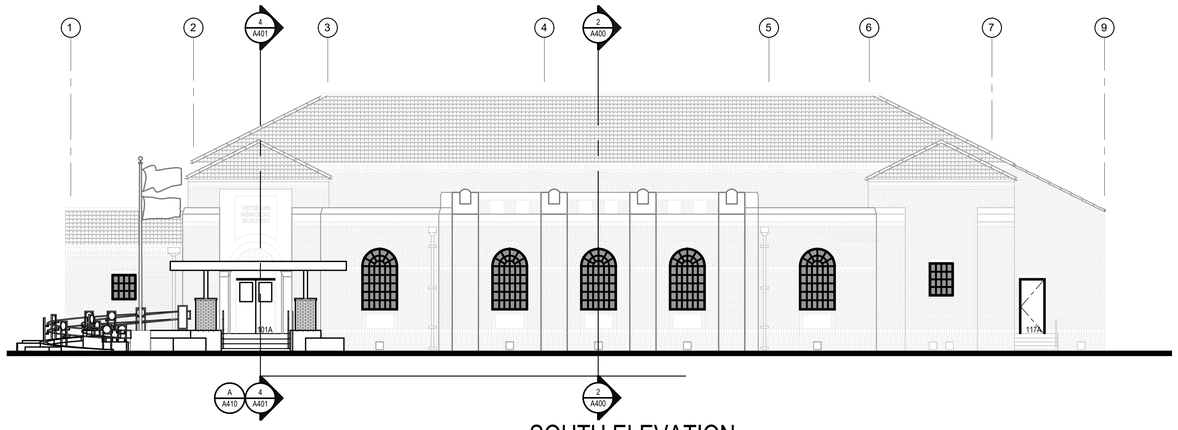

SOUTH ELEVATION

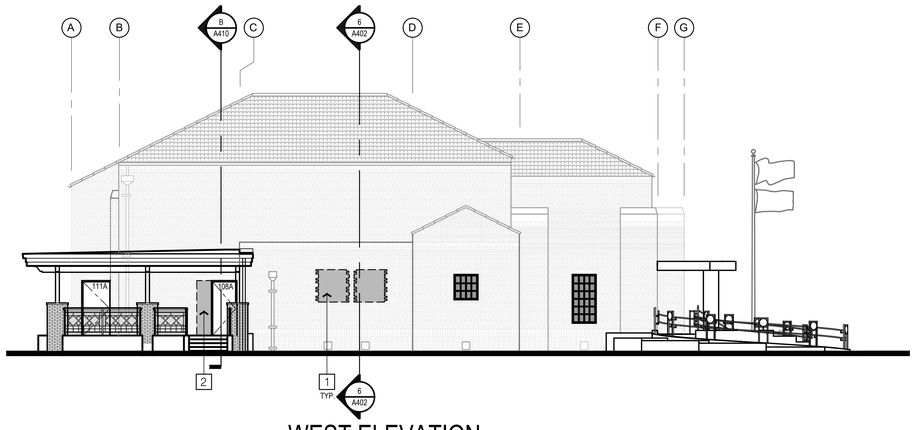

WEST ELEVATION

Copyright © 2025

All ideas, designs, arrangements and plans indicated or represented by this drawing are owned by, and the property of, NICHOLS, MELBURG and ROSSETTO and were created, evolved and developed for use on, and in conjunction with, the specified project. None of such ideas, designs, arrangements and plans shall be used by or disclosed to any person, firm or corporation for any purpose whatsoever without the written permission of NICHOLS, MELBURG and ROSSETTO.

NICHOLS MELBURG & ROSSETTO
ARCHITECTS + ENGINEERS
300 KNOLLCREST DRIVE
REDDING, CA. 96002
(530) 222-3300 (530) 222-3538 FAX
http://www.nmrdesign.com

CONSULTANTS

LICENSE STAMPS

LICENSED ARCHITECT
KYLE MATTHEWS
C 27504
REN. 10/31/25
STATE OF CALIFORNIA

PROJECT NAME

TEHAMA COUNTY CORNING VETERAN'S HALL

1620 SOLANO ST.
CORNING, CA

SHEET TITLE

EXTERIOR ELEVATIONS

DRAWING STATUS

CONSTRUCTION DOCUMENTS

REVISIONS

Sym.	Description	Date

Drawn By	NGG
Date Issued	2/13/2025
Scale	1/8" = 1'-0"
Project No.	21-6497

SHEET No.

A300

Login Name: KaleyP
Plot Date: February 13, 2025 - 9:13 am
File Name: N:\Projects\6000s\6000s-A\6250\21-6497 Tehama Co. Corning Vets Hall\Drawings\CVH-exterior elevations.dwg
XREFS: x-CVH_Title Block, x-CVH-elev, x-CVH-Tags, x-CVH-R11, x-CVH-DEM

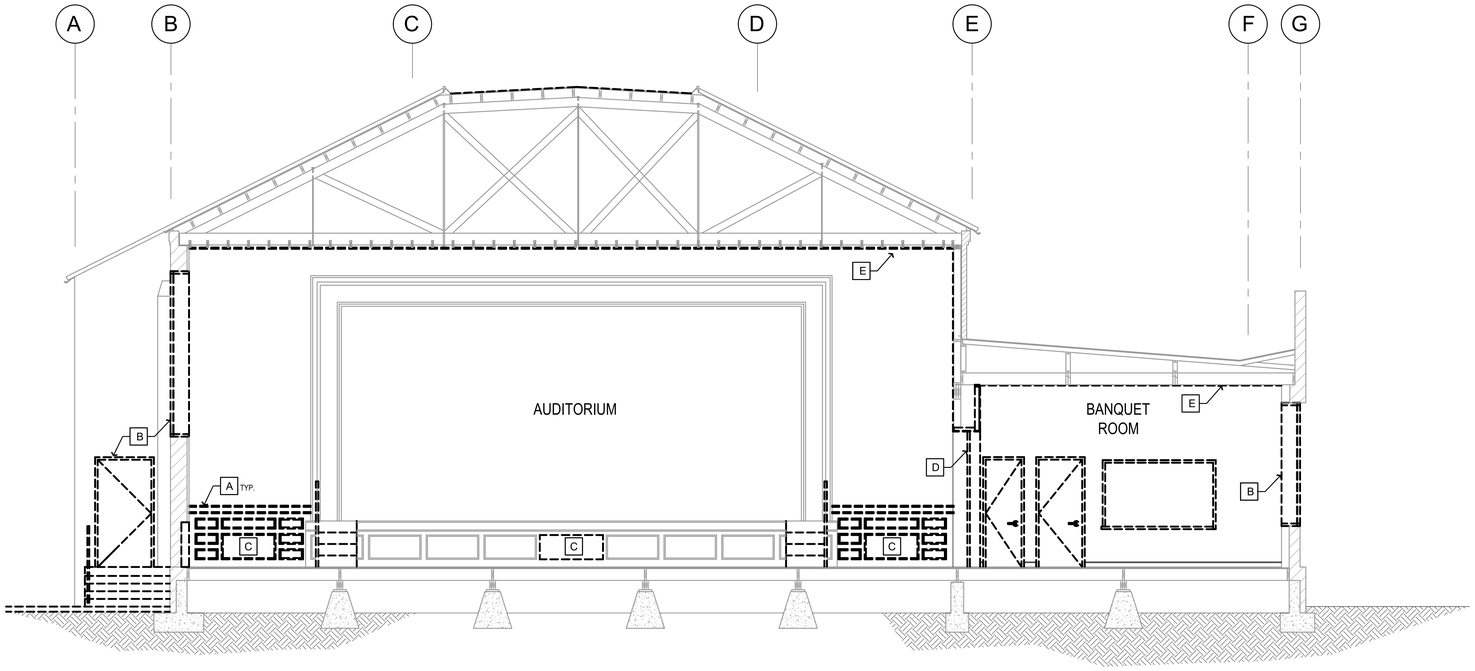

1 DEMOLITION SECTION

SCALE: 1/4" = 1'-0"

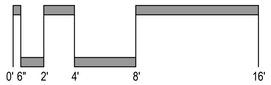

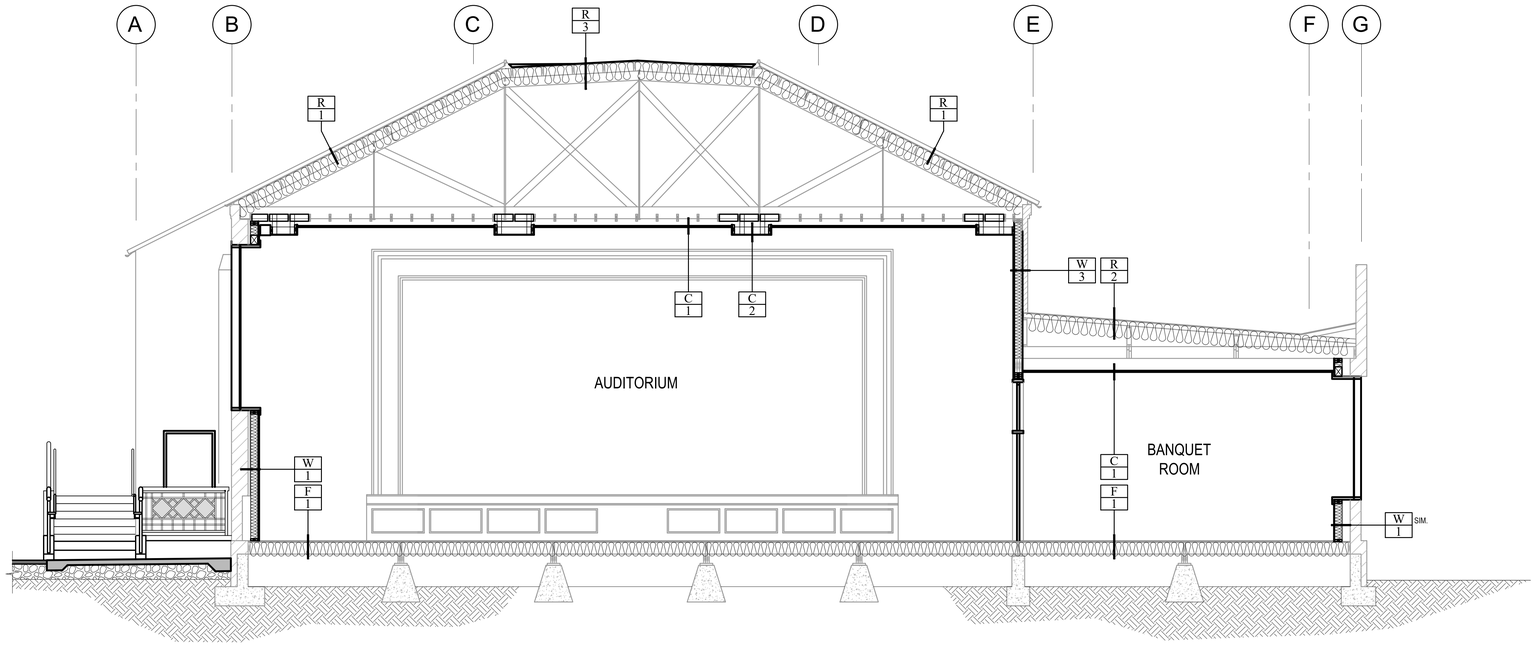

2 IMPROVEMENTS SECTION

SCALE: 1/4" = 1'-0"

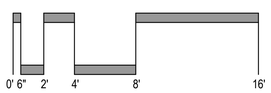

DEMO SHEET NOTES

- A REMOVE ALL INTERIOR FINISHES
- B REMOVE ALL EXTERIOR DOORS AND WINDOWS
- C REMOVE ALL MECHANICAL SYSTEMS
- D REMOVE FOLDING PARTITION
- E REMOVE CEILING
- F REMOVE STAIRS AND HANDRAILS, COMPLETE

IMPROVEMENTS SHEET NOTES

- 1 NEW EXTERIOR DOORS AND WINDOWS
- 2 NEW GLASS DOORS
- 3 NEW CEILING

Copyright © 2025

All ideas, designs, arrangements and plans indicated or represented by this drawing are owned by, and the property of, NICHOLS, MELBURG and ROSSETTO and were created, evolved and developed for use on, and in conjunction with, the specified project. None of such ideas, designs, arrangements and plans shall be used by or disclosed to any person, firm or corporation for any purpose whatsoever without the written permission of NICHOLS, MELBURG and ROSSETTO.

NICHOLS MELBURG & ROSSETTO
ARCHITECTS + ENGINEERS
300 KNOLLCREST DRIVE
REDDING, CA. 96002
(530) 222-3300 (530) 222-3538 FAX
http://www.nmrdesign.com

CONSULTANTS

LICENSE STAMPS

LICENSED ARCHITECT
KYLE MATTHEWS
C 27504
REN. 10/31/25
STATE OF CALIFORNIA

PROJECT NAME

TEHAMA COUNTY
CORNING
VETERAN'S HALL

1620 SOLANO ST.
CORNING, CA

SHEET TITLE

BUILDING SECTIONS

DRAWING STATUS

CONSTRUCTION DOCUMENTS

REVISIONS

Sym.	Description	Date

Drawn By	KP
Date Issued	2/13/2025
Scale	1/4" = 1'-0"
Project No.	21-6497

SHEET No.

A400

Login Name: KaleyP
Plot Date: February 13, 2025 - 9:56 am
File Name: N:\Projects\6000-AA\2021\6497 Tehama Co. Corning Vets Hall\Drawings\CAH - SECTIONS.dwg
XREFS: xCAH_Title Block : xCAH-181 : xCAH-182 : xCAH-183 : xCAH-184 : xCAH-185 : xCAH-186 : xCAH-187 : xCAH-188 : xCAH-mpp1 : xCAH-mpp2 : xCAH-mezzanine fr : xFloor Plan

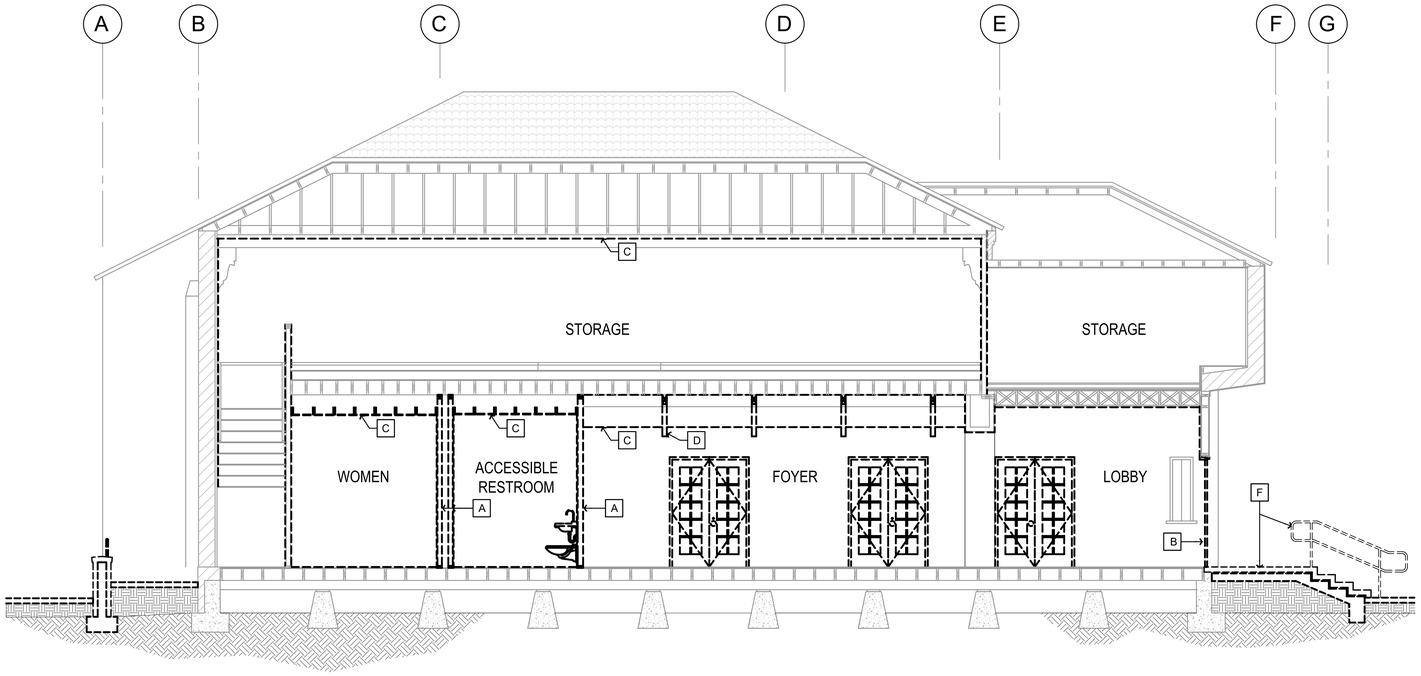

3 DEMOLITION SECTION

SCALE: 1/4" = 1'-0"

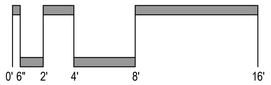

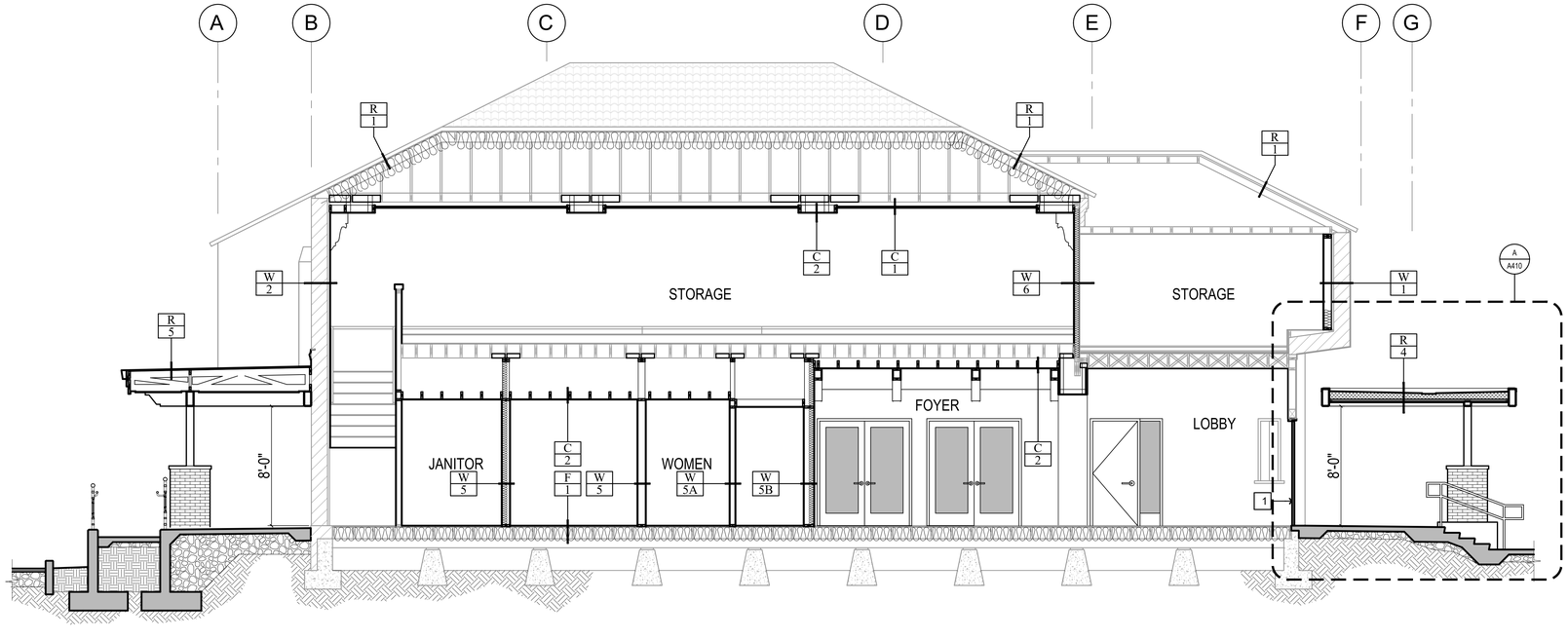

4 IMPROVEMENTS SECTION

SCALE: 1/4" = 1'-0"

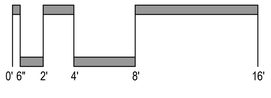

DEMO SHEET NOTES

A	DEMO (E) WALL
B	REPLACE EXTERIOR DOORS AND WINDOWS
C	DEMO (E) CEILING
D	DEMO (E) JOIST

IMPROVEMENTS SHEET NOTES

1	NEW EXTERIOR DOORS AND WINDOWS
2	NEW DOOR
3	NEW WALL
4	NEW CEILING
5	NEW PARTITION

Copyright © 2025

All ideas, designs, arrangements and plans indicated or represented by this drawing are owned by, and the property of, NICHOLS, MELBURG and ROSSETTO and were created, evolved and developed for use on, and in conjunction with, the specified project. None of such ideas, designs, arrangements or plans shall be used by, or disclosed to any person, firm or corporation for any purpose whatsoever without the written permission of NICHOLS, MELBURG and ROSSETTO.

NICHOLS MELBURG & ROSSETTO
ARCHITECTS + ENGINEERS
300 KNOLLCREST DRIVE
REDDING, CA. 96002
(530) 222-3300 (530) 222-3538 FAX
http://www.nmrdesign.com

CONSULTANTS

LICENSE STAMPS

PROJECT NAME

TEHAMA COUNTY
CORNING
VETERAN'S HALL

1620 SOLANO ST.
CORNING, CA

SHEET TITLE

BUILDING SECTIONS

DRAWING STATUS

CONSTRUCTION DOCUMENTS

REVISIONS

Sym.	Description	Date

Drawn By	KP
Date Issued	2/13/2025
Scale	1/4" = 1'-0"
Project No.	21-6497

SHEET No.

A401

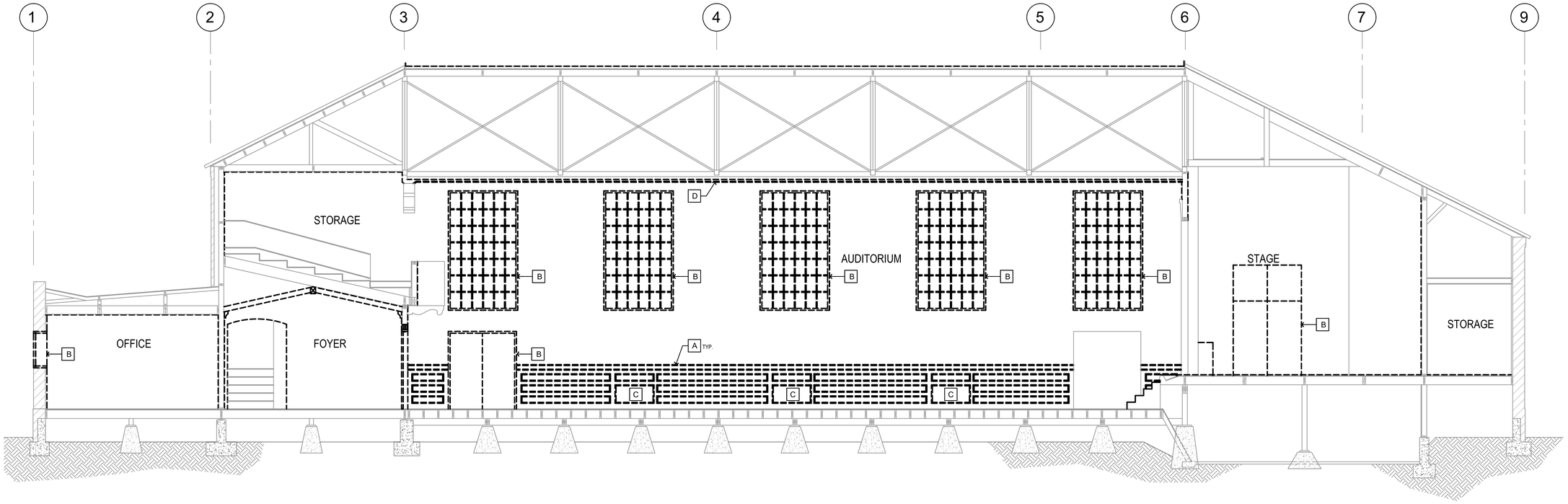

5 DEMOLITION SECTION

SCALE: 1/4" = 1'-0"

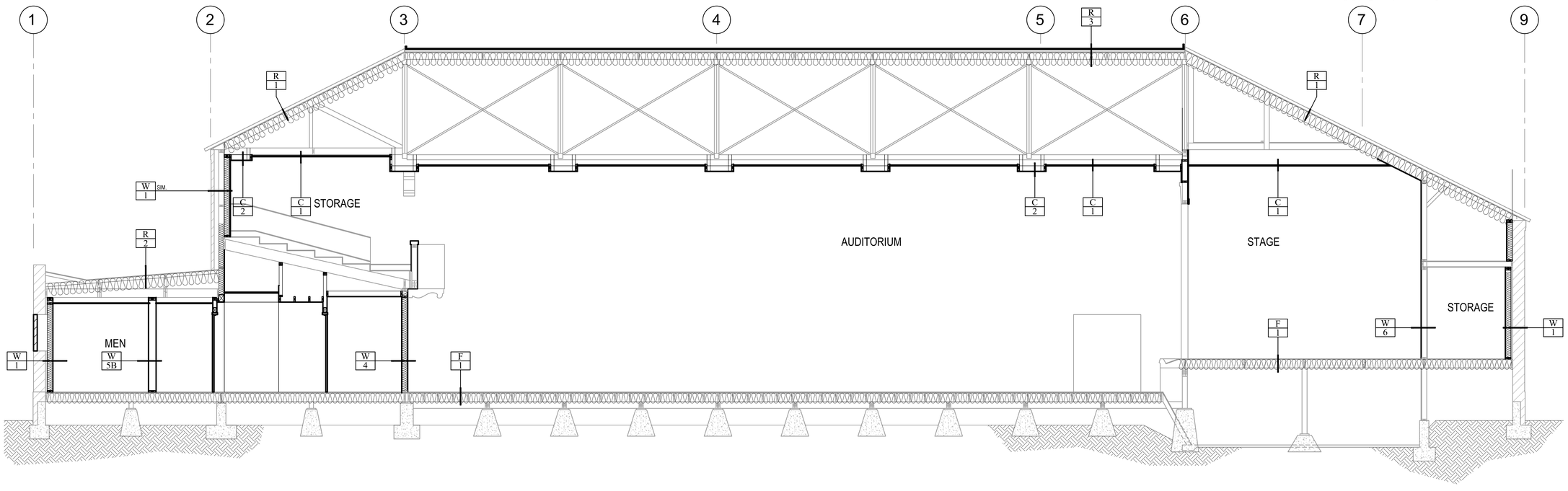

6 IMPROVEMENTS SECTION

SCALE: 1/4" = 1'-0"

DEMO SHEET NOTES	
A	REMOVE AND REPLACE ALL INTERIOR FINISHES
B	REPLACE EXTERIOR DOORS AND WINDOWS
C	REPLACE MECHANICAL EQUIPMENT
D	DEMO (E) CEILING

IMPROVEMENTS SHEET NOTES	
1	NEW EXTERIOR DOORS AND WINDOWS
2	NEW CEILING

Copyright © 2025

All ideas, designs, arrangements and plans indicated or represented by this drawing are owned by, and the property of, NICHOLS, MELBURG and ROSSETTO and were created, evolved and developed for use on, and in conjunction with, the specified project. None of such ideas, designs, arrangements and plans shall be used, or disclosed to any person, firm or corporation for any purpose whatsoever without the written permission of NICHOLS, MELBURG and ROSSETTO.

NICHOLS MELBURG & ROSSETTO
ARCHITECTS + ENGINEERS
300 KNOLLCREST DRIVE
REDDING, CA. 96002
(530) 222-3300 (530) 222-3538 FAX
http://www.nmrdesign.com

CONSULTANTS

LICENSE STAMPS

LICENSED ARCHITECT
KYLE MATTHEW ROSSETTO
C 27504
REN. 10/31/25
STATE OF CALIFORNIA

PROJECT NAME

TEHAMA COUNTY
CORNING
VETERAN'S HALL

1620 SOLANO ST.
CORNING, CA

SHEET TITLE

BUILDING SECTIONS

DRAWING STATUS

CONSTRUCTION DOCUMENTS

REVISIONS

Sym.	Description	Date

Drawn By	KP
Date Issued	2/13/2025
Scale	1/4" = 1'-0"
Project No.	21-6497

SHEET No.

A402

Login Name: KenenP
Plot Date: February 13, 2025 - 9:17 am
File Name: N:\Projects\90000\Oct-02\0712-6497 Tehama Co. Corning Vets Hall\Drawings\CVH - SECTIONS.dwg
HS\PS: CVH_Title Block - CVH1:1 - CVH1:PD - CVH1:FP - CVH1:ME - CVH1:ED - CVH1:ST - CVH1:Roof - CVH1:Mezz - CVH1:Hvac1 - CVH1:Hvac2 - CVH1:Elev Pit - CVH1:Floor Plan

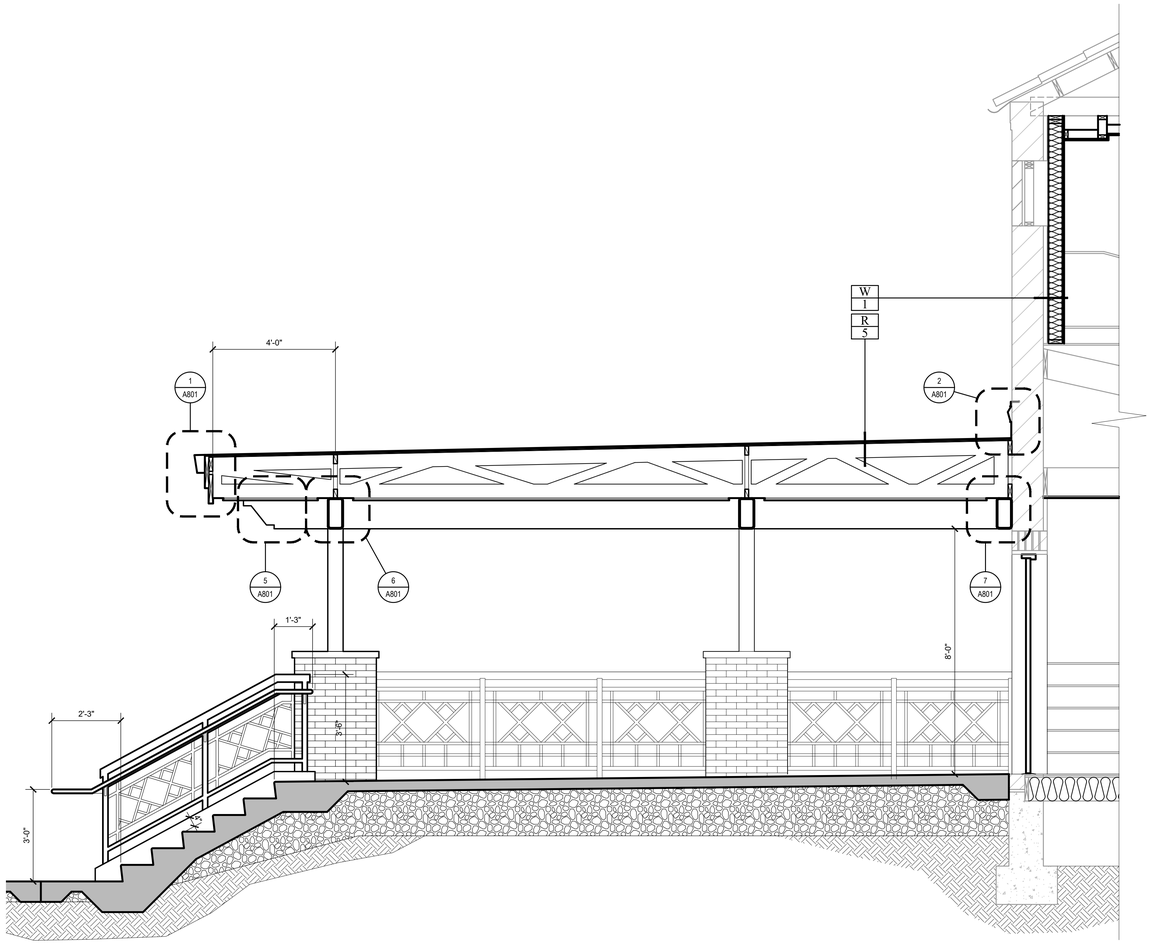

B WALL SECTION

SCALE: 1/2" = 1'-0"

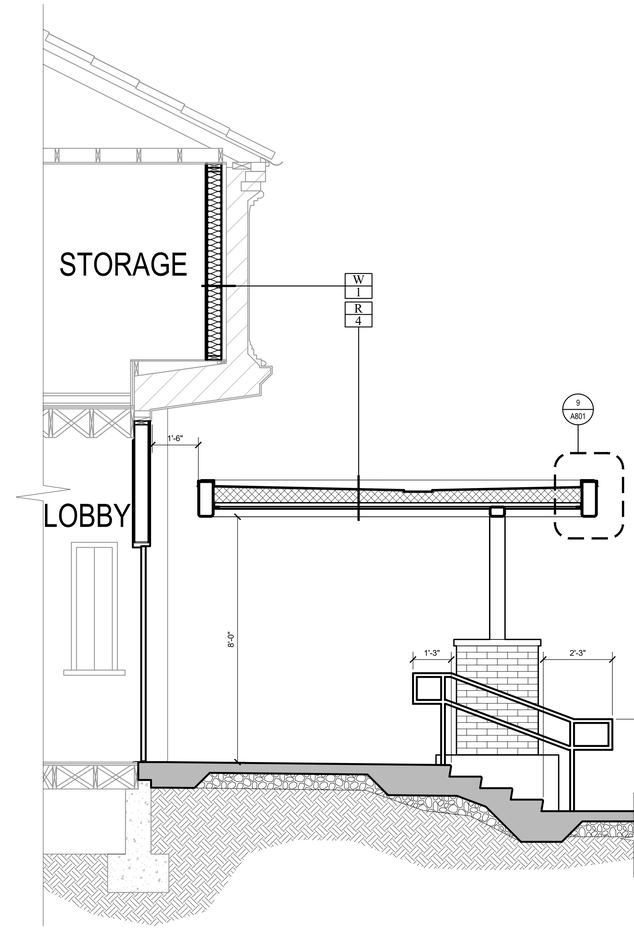

A WALL SECTION

SCALE: 1/2" = 1'-0"

Copyright © 2025

All ideas, designs, arrangements and plans indicated or represented by this drawing are owned by, and the property of, NICHOLS, MELBURG and ROSSETTO and were created, evolved and developed for use on, and in conjunction with, the specified project. None of such ideas, designs, arrangements or plans shall be used by, or disclosed to any person, firm or corporation for any purpose whatsoever without the written permission of NICHOLS, MELBURG and ROSSETTO.

NICHOLS MELBURG & ROSSETTO
ARCHITECTS + ENGINEERS
300 KNOLLCREST DRIVE
REDDING, CA. 96002
(530) 222-3300 (530) 222-3538 FAX
http://www.nmrdesign.com

CONSULTANTS

LICENSE STAMPS

PROJECT NAME

TEHAMA COUNTY
CORNING
VETERAN'S HALL

1620 SOLANO ST.
CORNING, CA

SHEET TITLE

ENLARGED SECTIONS

DRAWING STATUS

CONSTRUCTION DOCUMENTS

REVISIONS

Sym.	Description	Date

Drawn By	KP
Date Issued	2/13/2025
Scale	1/2" = 1'-0"
Project No.	21-6497

SHEET No.

A410

Login Name: KlarenP
Plot Date: February 13, 2025 - 9:19 am
File Name: N:\Projects\6000\Cad\2021\21-6497 Tehama Co. Corning Vets Hall\Drawings\CVH - Enlarged Sections.dwg
XREFS: x-CVH-Hl1 | x-CVH-GRID | x-CVH_Title Block | x-CVH-Hl0

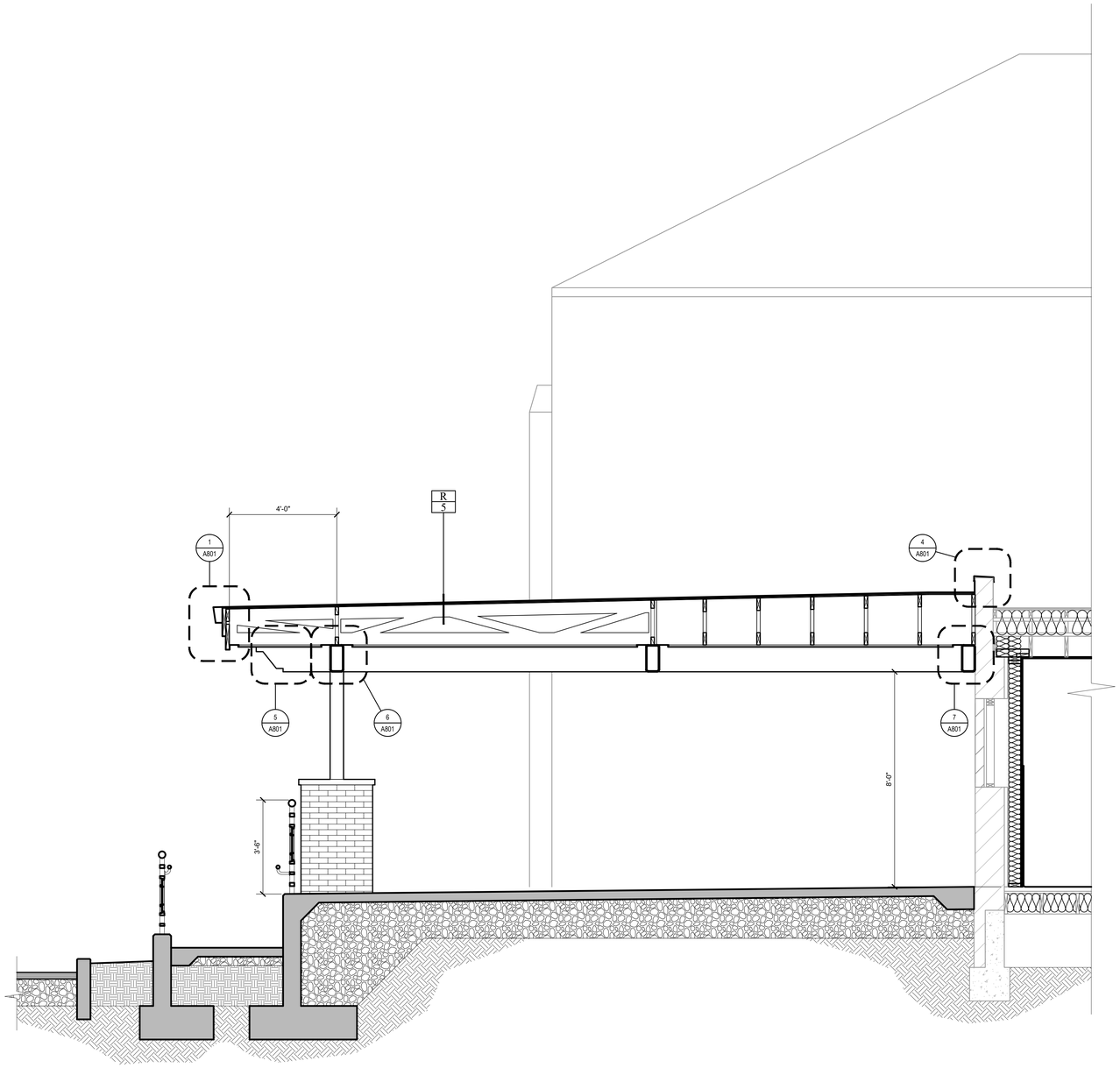

C WALL SECTION

SCALE: 1/2" = 1'-0"

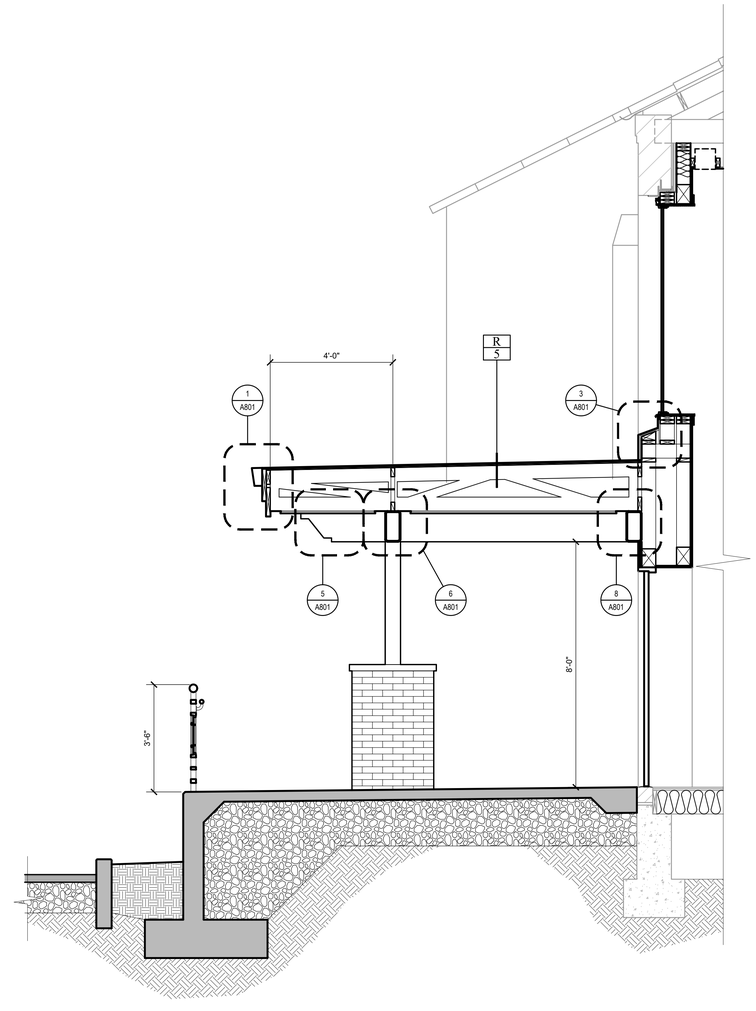

D WALL SECTION

SCALE: 1/2" = 1'-0"

Copyright © 2025

All ideas, designs, arrangements and plans indicated or represented by this drawing are owned by, and the property of, NICHOLS, MELBURG and ROSSETTO and were created, evolved and developed for use on, and in conjunction with, the specified project. None of such ideas, designs, arrangements or plans shall be used by, or disclosed to any person, firm or corporation for any purpose whatsoever without the written permission of NICHOLS, MELBURG and ROSSETTO.

NICHOLS MELBURG & ROSSETTO
ARCHITECTS + ENGINEERS
300 KNOLLCREST DRIVE
REDDING, CA. 96002
(530) 222-3300 (530) 222-3538 FAX
http://www.nmrdesign.com

CONSULTANTS

LICENSE STAMPS

PROJECT NAME

TEHAMA COUNTY
CORNING
VETERAN'S HALL

1620 SOLANO ST.
CORNING, CA

SHEET TITLE

ENLARGED SECTIONS

DRAWING STATUS

CONSTRUCTION DOCUMENTS

REVISIONS

Sym.	Description	Date

Drawn By	KP
Date Issued	2/13/2025
Scale	1/2" = 1'-0"
Project No.	21-6497

SHEET No.

A411

Login Name: KarenP
Plot Date: February 13, 2025 - 9:20 am
File Name: N:\Projects\6000\Civic\2021\21-6497 Tehama Co. Corning Veta Hall\Drawings\CVH - Enlarged Sections.dwg
XREFS: x-CVH-H11 | x-CVH-GRID | x-CVH_Title Block | x-CVH-H10

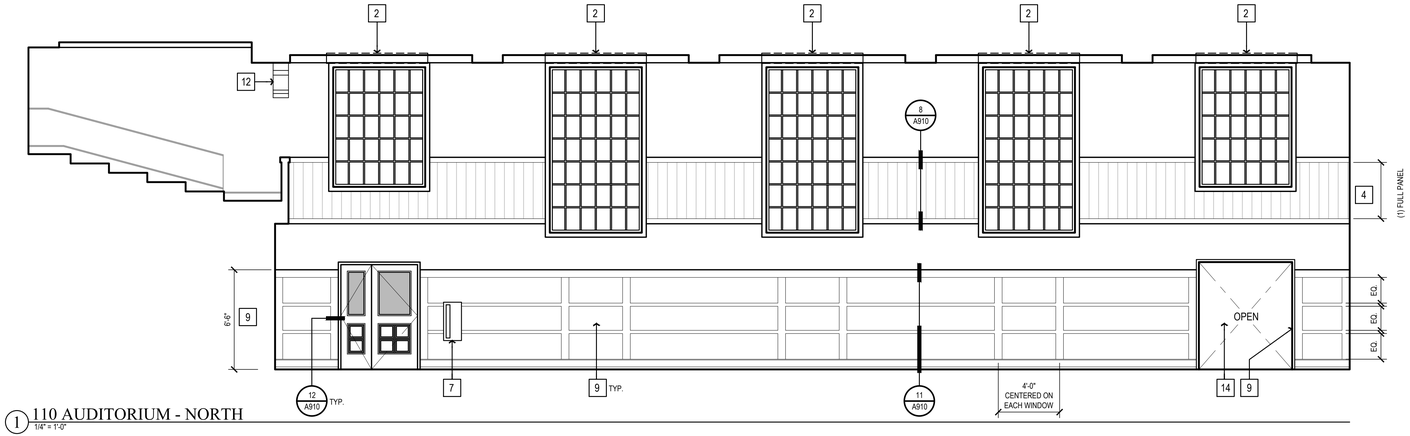

1 110 AUDITORIUM - NORTH
1/4" = 1'-0"

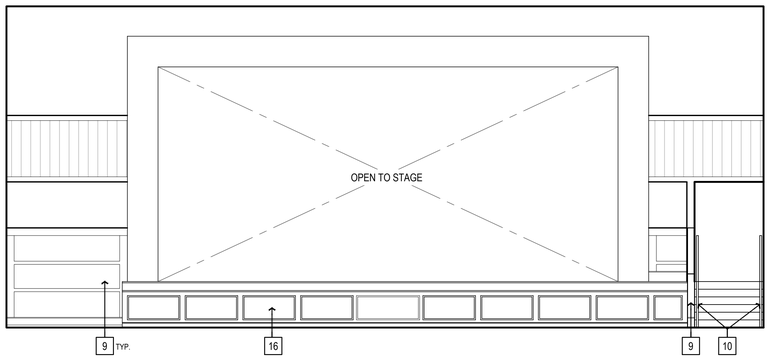

2 110 AUDITORIUM - EAST
1/4" = 1'-0"

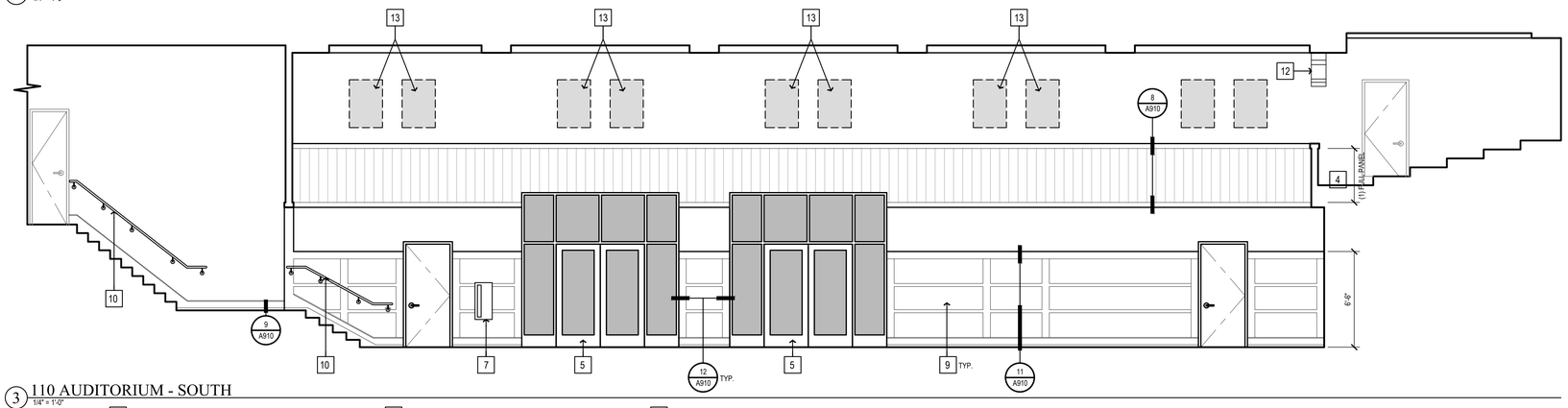

3 110 AUDITORIUM - SOUTH
1/4" = 1'-0"

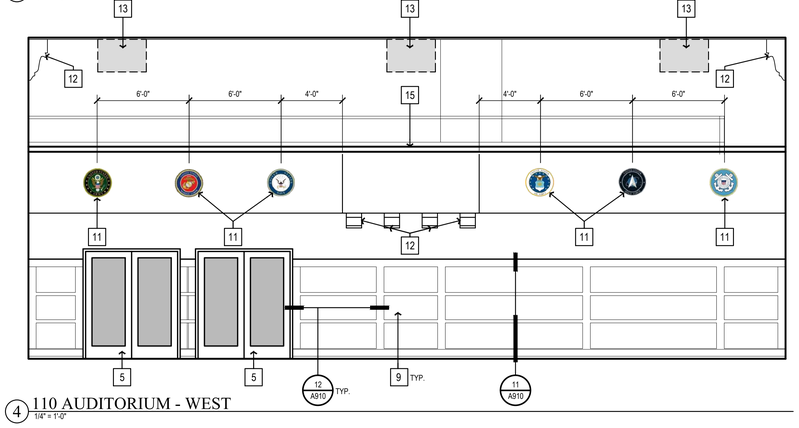

4 110 AUDITORIUM - WEST
1/4" = 1'-0"

KEYNOTES

1	WALL PROTECTION. SEE DETAIL 7 / A910.
2	MOTORIZED ROLLER SHADE. SEE DETAIL 1 / A910.
3	MANUAL ROLLER SHADE. SEE DETAIL 2 / A910.
4	ACOUSTICAL WALL PANEL. SEE DETAIL 8 / A910.
5	NEW DOOR SYSTEM W/ GLASS GL-1 (SHOWN SHADED).
6	EXISTING BI-FOLD DOOR TO REMAIN PAINT TO MATCH DOOR & FRAME.
7	RECESSED FIRE EXTINGUISHER CABINET. SEE DETAIL 9 / A910.
8	PAINT (E) BUILT-IN BOOKCASE, P-2 TO MATCH ADJACENT DOOR FRAMES.
9	DECORATIVE WOOD TRIM AND MOLDING.
10	1 1/2" DIA. STL HANDRAIL
11	24" DIAMETER BRONZE PLAQUE
12	(E) CORBEL TO REMAIN, REFINISH
13	INFILL EXISTING WINDOW TO BE REMOVED
14	CONTINUE WALL PANELING THROUGHOUT ENTRY
15	NEW WOOD CAP AT TOP OF BALCONY WALL
16	(E) WOOD PANELING AT FACE OF STAGE. REFINISH TYPICAL. REPLACE DAMAGED PANELS AND INFILL PANELS AT HEATERS TO BE REMOVED

Copyright © 2025
All ideas, designs, arrangements and plans indicated or represented by this drawing are owned by, and the property of, NICHOLS, MELBURG and ROSSETTO and were created, evolved and developed for use on, and in conjunction with, the specified project. None of such ideas, designs, arrangements and plans shall be used by or disclosed to any person, firm or corporation for any purpose whatsoever without the written permission of NICHOLS, MELBURG and ROSSETTO.

NICHOLS MELBURG & ROSSETTO
ARCHITECTS + ENGINEERS
300 KNOLLCREST DRIVE
REDDING, CA. 96002
(530) 222-3300 (530) 222-3538 FAX
http://www.nmrdesign.com

CONSULTANTS

LICENSE STAMPS

LICENSED ARCHITECT
KYLE MATTHEWS
C 27504
REN. 10/31/25
STATE OF CALIFORNIA

PROJECT NAME

TEHAMA COUNTY
CORNING
VETERAN'S HALL

1620 SOLANO ST.
CORNING, CA

SHEET TITLE

INTERIOR ELEVATIONS

DRAWING STATUS

CONSTRUCTION DOCUMENTS

REVISIONS

Sym.	Description	Date

Drawn By	KP
Date Issued	2/13/2025
Scale	1/4" = 1'-0"
Project No.	21-6497

SHEET No.

A500

Login Name: Kyle M
Plot Date: February 13, 2025 - 5:10 pm
File Name: N:\Projects\6000\Jobs\2021\6497 Tehama Co. Corning Vets Hall\Drawings\CH - INT ELEV.dwg
Xrefs: b:CH_Title Block | x:CH-M1 | x:CH-E0 | x:CH-E1 | x:CH-E2 | x:CH-E3 | x:CH-Hatch | x:CH-M1 | x:CH-Hatch | x:CH-mezzanine fr

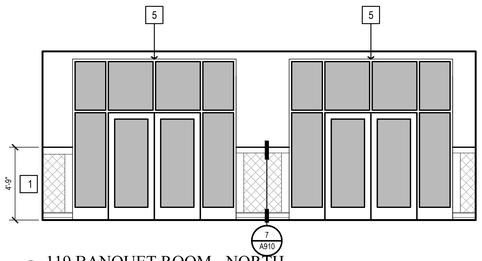

5 119 BANQUET ROOM - NORTH
1/4" = 1'-0"

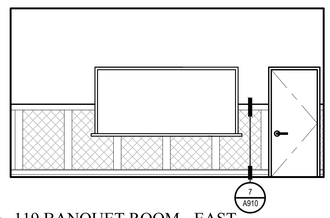

6 119 BANQUET ROOM - EAST
1/4" = 1'-0"

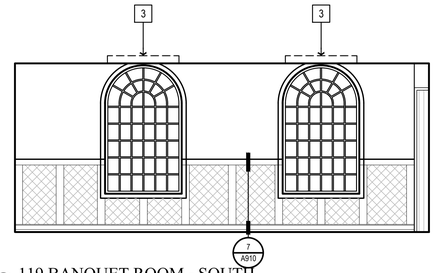

7 119 BANQUET ROOM - SOUTH
1/4" = 1'-0"

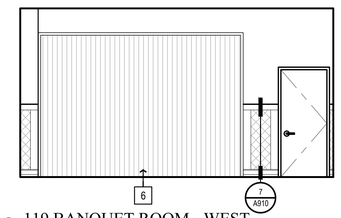

8 119 BANQUET ROOM - WEST
1/4" = 1'-0"

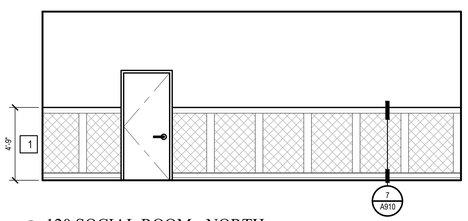

9 120 SOCIAL ROOM - NORTH
1/4" = 1'-0"

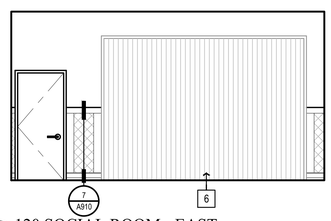

10 120 SOCIAL ROOM - EAST
1/4" = 1'-0"

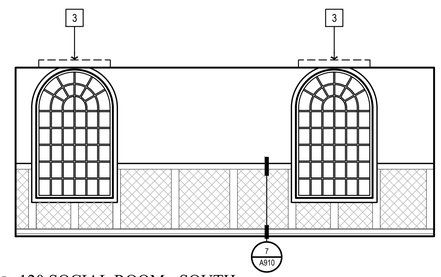

11 120 SOCIAL ROOM - SOUTH
1/4" = 1'-0"

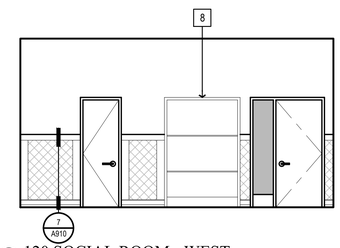

12 120 SOCIAL ROOM - WEST
1/4" = 1'-0"

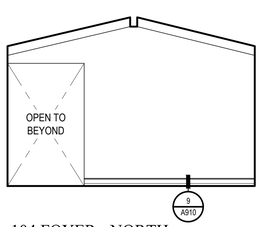

13 104 FOYER - NORTH
1/4" = 1'-0"

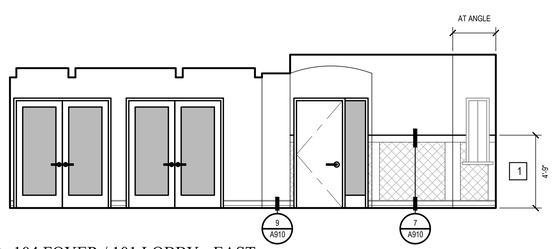

14 104 FOYER / 101 LOBBY - EAST
1/4" = 1'-0"

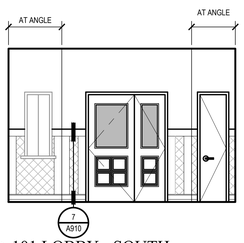

15 101 LOBBY - SOUTH
1/4" = 1'-0"

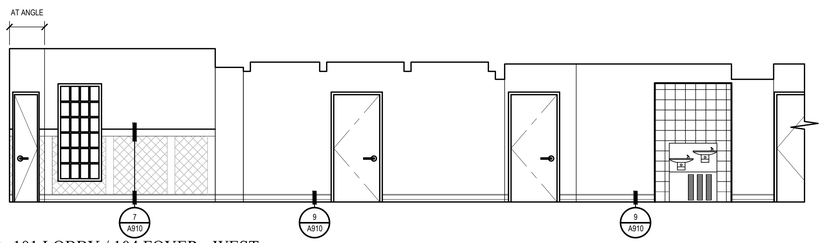

16 101 LOBBY / 104 FOYER - WEST
1/4" = 1'-0"

KEYNOTES

1	WALL PROTECTION. SEE DETAIL 7 / A910.
2	MOTORIZED ROLLER SHADE. SEE DETAIL 1 / A910.
3	MANUAL ROLLER SHADE. SEE DETAIL 2 / A910.
4	ACOUSTICAL WALL PANEL. SEE DETAIL 8 / A910.
5	NEW DOOR SYSTEM W/ GLASS GL-1 (SHOWN SHADED).
6	EXISTING BI-FOLD DOOR TO REMAIN PAINT TO MATCH DOOR & FRAME.
7	RECESSED FIRE EXTINGUISHER CABINET. SEE DETAIL 3 / A901.
8	PAINT (E) BUILT-IN BOOKCASE, P-2 TO MATCH ADJACENT DOOR FRAMES.
9	WOOD PANELING SYSTEM, SEE DETAIL 10/A910

Copyright © 2025
All ideas, designs, arrangements and plans indicated or represented by this drawing are owned by, and the property of, NICHOLS, MELBURG and ROSSETTO and were created, evolved and developed for use on, and in conjunction with, the specified project. None of such ideas, designs, arrangements and plans shall be used by or disclosed to any person, firm or corporation for any purpose whatsoever without the written permission of NICHOLS, MELBURG and ROSSETTO.

NICHOLS MELBURG & ROSSETTO
ARCHITECTS + ENGINEERS
300 KNOLLCREST DRIVE
REDDING, CA. 96002
(530) 222-3300 (530) 222-3538 FAX
http://www.nmrdesign.com

CONSULTANTS

LICENSE STAMPS

LICENSED ARCHITECT
KYLE MATTHEWS
C 27504
REN. 10/31/25
STATE OF CALIFORNIA

PROJECT NAME

TEHAMA COUNTY
CORNING
VETERAN'S HALL

1820 SOLANO ST.
CORNING, CA

SHEET TITLE

INTERIOR ELEVATIONS

DRAWING STATUS

CONSTRUCTION DOCUMENTS

REVISIONS

Sym.	Description	Date

Drawn By	KP
Date Issued	2/13/2025
Scale	1/4" = 1'-0"
Project No.	21-6497

SHEET No.

A501

Login Name: Kyle M
Plot Date: February 13, 2025 - 5:10 pm
File Name: N:\Projects\6000Series\6202\21-6497 Tehama Co. Corning Vets Hall\Drawings\CAH - INT ELEV.dwg
XREFS: XCAL_Title Block - XCAH-01 - XCAH-02 - XCAH-03 - XCAH-04 - XCAH-05 - XCAH-06 - XCAH-07 - XCAH-08 - XCAH-09 - XCAH-mezzanine fr

FINISH SCHEDULE

NUMBER	NAME	FLOORING	BASE	WALLS: NORTH	WALLS: EAST	WALLS: SOUTH	WALLS: WEST	MISC.	CASEWORK: UPPER CABINET	CASEWORK: BASE CABINET / FULL HEIGHT CABINET	CASEWORK: COUNTER TOP	DOOR FINISH	DOOR FRAME FINISH	CEILING FINISH	SOFFIT FINISH	WINDOW COVERING	WOOD TRIM/ MOULDING	ROOM FINISH REMARKS
FIRST FLOOR																		
101	LOBBY	WD-1	B-1	P-3	P-4, WP-1	P-4, WP-1	P-4, WP-1	-	-	-	-	ST	ST	P-1	P-3	-	P-2	4
102	COATS	WD-1	B-1	P-1	P-1	P-1	P-1	-	-	-	-	PL-1	P-2	P-1	-	-	-	-
103	TICKETS	WD-1	B-1	P-1	P-1	P-1	P-1	-	-	-	-	PL-1	P-2	P-1	-	-	P-2	-
104	FOYER	WD-1	B-1	P-1	P-4	P-3	P-1	-	-	-	-	-	-	P-1	P-1	-	-	7
105	OFFICE	VCT-1	RB-1	P-4	P-4	P-4	P-3	-	-	-	-	PL-1	P-2	ACT-2	-	WS-1	-	-
106	MEN	SV-1	SV-1	P-3, FRL-1	P-3, FRL-1	P-3, FRL-1	P-3, FRL-1	PRT-1	-	PL-1	SSM-1	PL-1	P-2	P-1	-	-	-	1, 2, 4
107	WOMEN	SV-1	SV-1	P-3, FRL-1	P-3, FRL-1	P-3, FRL-1	P-3, FRL-1	PRT-1	-	PL-1	SSM-1	PL-1	P-2	P-1	-	-	-	1, 2, 4
108	ENTRY	WD-1, FT-1, RF-1	B-1	P-1	P-1	P-1	P-1, WT-1	CG-1	-	-	-	P-2	P-2	ACT-1	P-1	-	-	3, 5
109	JANITOR	SV-1	SV-1	P-1, FRP-1	P-1, FRP-1	P-1, FRP-1	P-1, FRP-1	-	-	-	-	PL-1	P-2	P-1	-	-	-	1, 2
110	AUDITORIUM	WD-1	B-1	P-1, AWP-1	P-1, 2, AWP-1	P-1, AWP-1	P-1	-	-	-	-	PL-1, P-2, GL-1	P-2	ACT-2	P-1	WS-1	P-2, 1	3, 4, 5
111	ENTRY	WD-1	B-1	P-1	P-1	P-1	P-1	CG-1	-	-	-	P-2	P-2	P-1	P-1	-	-	-
112	STAGE	VCT-1, RF-1	P-6	P-6	P-6	P-6	P-2	ST-1	-	-	-	P-7	P-7	ACT-3	P-6	-	-	5
113.1	STORAGE	ETR	B-1	P-1	P-1	P-1	P-1	-	-	-	-	P-7	P-7	P-1	-	-	-	6
113	STORAGE	ETR	B-1	P-1	P-1	P-1	P-1	-	-	-	-	P-7	P-7	P-1	-	-	-	6
114	STORAGE	ETR	B-1	P-1	P-1	P-1	P-1	-	-	-	-	P-7	P-7	P-1	-	-	-	6
115	STORAGE	ETR	B-1	P-1	P-1	P-1	P-1	-	-	-	-	P-7	P-7	P-1	-	-	-	6
116	STORAGE	ETR	B-1	P-1	P-1	P-1	P-1	-	-	-	-	P-7	P-7	P-1	-	-	-	6
117	ENTRY	WOM-1, RF-1	B-1	P-1	P-1	P-1	P-1	-	-	-	-	P-2	P-2	P-1	-	-	-	-
118	KITCHEN	SV-2	SV-2	FRP-2	FRP-2	FRP-2 / SS-1	FRP-2	-	PL-1	PL-1	SS	P-2, PL-1	P-2	ACT-4	-	WS-1	-	2, 4, 5
119	BANQUET ROOM	WD-1	B-1	P-1, WP-1	P-1, WP-1	P-5, WP-1	P-1, WP-1	-	-	-	SS	PL-1, GL-1	P-2	ACT-2	-	WS-1	P-2	4, 5
120	SOCIAL ROOM	WD-1	B-1	P-1, WP-1	P-1, WP-1	P-5, WP-1	P-1, WP-1	-	-	P-2	-	PL-1	P-2	ACT-2	-	WS-1	P-2	4, 5
SECOND FLOOR																		
201	STORAGE	ETR	B-1	P-1	P-1	P-1	P-1	-	-	-	-	-	-	ACT-2	P-1	-	P-2	5
202	STORAGE	ETR	RB-1	P-1	P-1	P-1	P-1	-	-	-	-	P-2	P-2	P-1	-	-	-	-
203	HVAC	ETR	RB-1	P-1	P-1	P-1	P-1	-	-	-	-	P-2	P-2	P-1	-	-	-	-
204	STORAGE ROOM	ETR	RB-1	P-1	P-1	P-1	P-1	-	-	-	-	P-2	P-2	P-1	-	-	-	-

FINISH SCHEDULE LEGEND

WALK-OFF MAT

WOM-1	MANUFACTURER	PATCRAFT
	COLLECTION	FOOT IN THE DOOR II
	STYLE	I0304 - WALK RIGHT IN II
	COLOR	00100 - NATURAL BEIGE
	SIZE	24" x 24"
	INSTALL	MONOLITHIC

SHEET VINYL FLOORING

SV-1	MANUFACTURER	TARKETT
	STYLE	ARIA
	COLOR	GYPSY MOTH CB 21010 655
	SIZE	6'-6" WIDE ROLL
	SEAMS	HEATWELD
	WELDING ROD	COLOR TO MATCH
	BASE	6" HIGH INTEGRAL COVED
SV-2	MANUFACTURER	GERFLOR
	STYLE	TARASAFE ULTRA
	COLOR	7383 DIOPSIDE
	SIZE	6'-6" WIDE ROLL
	SEAMS	HEATWELD
	WELDING ROD	COLOR TO MATCH
	BASE	6" HIGH INTEGRAL COVED

WOOD FLOORING

WD-1	REFINISH EXISTING WOOD	
	SPECIES	MAPLE
	STAIN	CLEAR / NATURAL
	NOTE: SEE CONTROL SAMPLE FOR COLOR	

VINYL COMPOSITION TILE

VCT-1	MANUFACTURER	ARMSTRONG
	STYLE	STANDARD EXCELON IMPERIAL TEXTURE
	COLOR	51810 WASHED LINEN
	SIZE	12" x 12" x 1/8" (3.2mm) THICK
	INSTALL	QUARTER TURN

RUBBER FLOORING

RF-1	MANUFACTURER	TARKETT
	STYLE	ANGLE FIT RUBBER STAIR TREAD WITH INTEGRATED RISER
	COLOR	VF2 OAK VALLEY
	TEXTURE	COLOR SPLASH SPECKLED HAMMERED RUBBER TILE
	SAFE-T INSERT	CONTRASTING GRIT TAPE, BLACK PHOTOLUMINESCENT TOP & BOTTOM TREAD
	WIDTH	5'-10" MAX WIDTH
	INSTALL	ONE PIECE PER TREAD/RISER
	LANDING	24" x 24" TILE, COLOR SPLASH SPECKLED HAMMERED

BASE

B-1	WOOD BASE	
	FINISH	PAINT P-2
RB-1	MANUFACTURER	TARKETT
	STYLE	BASEWORKS THERMOSET RUBBER (TYPE TS)
	COLOR	55 SILVER GREY WG
	SIZE	4" HIGH COIL W/ TOE (NO MANUFACTURED CORNERS)

PAINT

P-1	MANUFACTURER	DUNN EDWARDS
	COLOR	DE6218 ANTIQUE PAPER
	FINISH	LOW SHEEN
	LOCATION	FIELD
P-1E	MANUFACTURER	DUNN EDWARDS
	COLOR	DE6218 ANTIQUE PAPER
	FINISH	EPOXY
	LOCATION	KITCHEN
P-2	MANUFACTURER	DUNN EDWARDS
	COLOR	DEC795 GRAY PEARL
	FINISH	EPOXY
	LOCATION	DOORS & TRIM
P-3	MANUFACTURER	DUNN EDWARDS
	COLOR	DE6376 LOOKING GLASS
	FINISH	LOW SHEEN
	LOCATION	ACCENT
P-4	MANUFACTURER	DUNN EDWARDS
	COLOR	DET591 SILVER SCREEN
	FINISH	LOW SHEEN
	LOCATION	ACCENT
P-5	MANUFACTURER	DUNN EDWARDS
	COLOR	DE6213 FINE GRAIN
	FINISH	LOW SHEEN
	LOCATION	ACCENT
P-6	MANUFACTURER	DUNN EDWARDS
	COLOR	DE6350 DARK ENGINE
	FINISH	LOW SHEEN
	LOCATION	STAGE
P-7	MANUFACTURER	DUNN EDWARDS
	COLOR	DE6371 BLACKJACK
	FINISH	LOW SHEEN
	LOCATION	STAGE DOORS

WALL PROTECTION

WP-1	MANUFACTURER	IPC DOOR + WALL PROTECTION SYSTEMS
	STYLE	RICOCHET - SKETCH
	COLOR	SIDEWALK R715
	SIZE	48" WIDE ROLL
	INSTALL	SEE INTERIOR ELEVATIONS, FULL PANEL BETWEEN TRIM
ACOUSTICAL WALL PANEL		
AWP-1	MANUFACTURER	KIREI
	SERIES	EMBOSSED PANELS
	STYLE	ZEN PANELS
	COLOR	908 CREAM
	SIZE	110.2"H x 44.5"L x 0.35"D
	INSTALL PATTERN	VERTICAL DIRECTION
CORNER GUARD		
CG-1	MANUFACTURER	IPC DOOR + WALL PROTECTION SYSTEMS
	STYLE	SURFACE MOUNT STAINLESS STEEL
	WING SIZE	2"
	THICKNESS	18 GAUGE
	INSTALL	FULL HEIGHT
FIBER REINFORCED LAMINATE		
FRL-1	MANUFACTURER	NEVAMAR WALL PROTECTION PANELS
	PATTERN	VA7002
	COLOR	COOL CHIC
	SIZE	4' WIDE X 8' LONG
	TRIM	COLOR COORDINATED PVC MOLDINGS
	INSTALL	4' HIGH ABOVE BASE
FIBERGLASS REINFORCED PANEL		
FRP-1	MANUFACTURER	MARLITE
	TEXTURE	PEBBLED FRP
	COLOR	P145 SILVER
	SIZE	4' x 8'
FRP-2	MANUFACTURER	MARLITE
	TEXTURE	PEBBLED FRP
	COLOR	P100 WHITE
	SIZE	4' x 8'
STAINLESS STEEL PANEL		
SS-1	STAINLESS STEEL PANELS	
	SIZE	4' x 8'

PLASTIC LAMINATE

PL-1	MANUFACTURER	NEVAMAR
	PATTERN	LN6002T KOPI SUSU

SOLID SURFACE MATERIAL

SSM-1	MANUFACTURER	DURASEIN
	COLOR	ROYAL CARRERA
	PRODUCT NUMBER	DM5009

ACOUSTICAL CEILING TILE

ACT-1	MANUFACTURER	ARMSTRONG
	STYLE	ULTIMA HIGH NRC 1940 SQUARE LAY-IN
	COLOR	WHITE
	SIZE	24" x 24"
	GRID	15/16" PRELUDE, WHITE
ACT-2	MANUFACTURER	ARMSTRONG
	STYLE	CIRRUS PROFILES 591 CLASSIC STEP TEGULAR
	COLOR	WHITE
	SIZE	24" x 24"
	GRID	15/16" PRELUDE, WHITE
ACT-3	MANUFACTURER	ARMSTRONG
	STYLE	BACKSTAGE NOIR 1318 SQUARE LAY-IN
	COLOR	BLACK
	SIZE	24" x 24"
	GRID	15/16" PRELUDE, BLACK
ACT-4	MANUFACTURER	ARMSTRONG
	STYLE	KITCHEN ZONE 673 SQUARE LAY-IN
	COLOR	WHITE
	SIZE	24" x 24"
	GRID	15/16" PRELUDE, WHITE

GLASS

GL-1	MANUFACTURER	GOLDRAY GLASS
	STYLE	PRIVACY TEXTURES
	TEXTURE	1/8" NARROW REED

TOILET PARTITION

PRT-1	MANUFACTURER	SCANTRON PRODUCTS
	PATTERN	ORANGE PEEL
	COLOR	CONCRETE

WINDOW SHADE

WS-1	MANUFACTURER	DRAPER
	STYLE	SINGLE ROLL
	STYLE	SHEARWEAVE BASIC 5%
	SHADE COLOR	P05 WHITE/PLATINUM

TILE

FLOOR TILE		
FT-1	MANUFACTURER	EMSER TILE
	COLLECTION	COSMOPOLITAN
	COLOR	CRYSTAL
	FINISH	SATIN
	SIZE	24" x 24"
	INSTALL	DRINKING FOUNTAIN ALCOVE
WALL TILE		
WT-1	MANUFACTURER	GENROSE STONE & TILE
	COLLECTION	MYSTIQUE
	COLOR	DECO 7
	FINISH	MATTE
	SIZE	8" x 8"
	INSTALL	DRINKING FOUNTAIN ALCOVE

STAGE CURTAIN

STAGE CURTAIN		
ST-1	MANUFACTURER	KM FABRICS
	PATTERN	PLATEAU
	PIECE	STYLE 626
	COLOR	PEWTER 1060

FINISH ABBREVIATIONS

AT	ACOUSTICAL CEILING TILE
ATSP	ACOUSTICAL CEILING TILE SCRABBLE
ATWD	WOOD CEILING PANELS
B	WALL BASE
BG	BUMPER GUARD
C	CONCRETE
CG	CORNER GUARD
CHR	CHAIR RAIL
CPT	CARPET
CR	CRASH RAIL
CT	CERAMIC TILE
DR	DOOR
DWP	DECORATIVE WALL PANEL
EPX	EPOXY
ETR	EXISTING TO REMAIN
EXP	EXPOSED STRUCTURE
FF	FACTORY FINISH
FRL	FIBER REINFORCED LAMINATE
FRP	FIBERGLASS REINFORCED PANEL
FT	FLOOR TILE
GL	GLASS
HIC	HIGH IMPACT WALL COVERING
HR	HAND RAIL
LCK	LOCKERS
LVT	LUXURY VINYL TILE
ME	MATCH EXISTING
MTL	METAL
NS	NATURAL STONE
PB	PROFILE WALL BASE (MITERED CORNERS)
PG	PRESSED GLASS
PL	PLASTIC LAMINATE
PRT	TOILET PARTITION
PRV	PRIVACY CURTAIN
P-1	PAINT - EGGSHELL/SATIN
P-1A	PAINT - SEMI-GLOSS
P-1E	PAINT - EPOXY
QRZ	QUARTZ SURFACING
RAF	RUBBER ATHLETIC FLOORING
RF	RUBBER FLOORING
RP	RESIN PANEL FLOORING
RT	RUBBER TILE
SCB	SELF COVE BASE
SCR	SHOWER CURTAIN
SDT	STATIC DISSIPATIVE TILE
SSM	SOLID SURFACING MATERIAL
ST	STAINED
SV	SHEET VINYL
SVT	SOLID VINYL TILE
TB	TILE BASE
TER	TERRAZZO
TRS	TRANSITION STRIP
TT	TERRAZZO TILE
VCT	VINYL COMPOSITION TILE
VT	VINYL TILE
WB	1" MINI BLINDS
WC	WALL COVERING
WCB	WALL COVERING BORDER
WD	WOOD
WOM	WALK OFF MAT (CARPET)
WP	WALL PROTECTION
WS-1	WINDOW SHADE (SINGLE ROLL)
WS-2	WINDOW SHADE (DOUBLE ROLL)
WSV	WELDED SHEET VINYL
WT	WALL TILE
UON	UNLESS OTHERWISE NOTED

GENERAL NOTES

A. ALL INTERIOR WALL & CLG. FINISHES SALL COMPLY WITH CBC TABLE 803.13 AND SECTION 803 (FLAME SPREAD RATINGS.) PROVIDE A CLASS B (26-75 FLAME SPREAD RATING) AT ROOMS OR AREAS AND A CLASS A (0-25 FLAME SPREAD RATING) AT ALL EXITWAYS. FINISHES SHALL ALSO COMPLY WITH CBC SECTION 1224.4.11 AND TABLE 1224.11.

B. SEE INTERIOR ELEVATIONS, SECTIONS & REFLECTED CEILING FOR ADDITIONAL INFORMATION.

C. ALL ROOM FINISHES DESIGNATED AS EXISTING THAT ARE AFFECTED BY CONSTRUCTION SHALL BE PATCHED TO MATCH ADJACENT FINISHES SO THAT THERE WILL BE NO DISCERNABLE DIFFERENCES BETWEEN NEW AND EXISTING SURFACES.

D. ACOUSTICAL TILE, CARPETING, & VINYL WALL FABRIC SAMPLES MUST BE SUBMITTED FOR APPROVAL PRIOR TO INSTALLATION. CARPET SAMPLES MUST BE ACCOMPANIED BY A REPORT FROM A TESTING LABORATORY CERTIFYING A FLAME-SPREAD RATING OF 75 OR LESS AS PER ASTM-84-68. ALSO ACCEPTABLE IS NBIR 78-1436 CERTIFYING A MINIMUM RATING OF 0.45 WATTS PER SQ. CENTIMETER FOR UNSPRINKLERED BUILDINGS AND 0.22 WATTS PER SQ. CENTIMETER FOR SPRINKLERED BUILDINGS.

E. ALL INTERIOR FLOOR FINISHES SHALL COMPLY WITH CBC SECTION 804.

F. WOOD GRAIN PLASTIC LAMINATES SHALL BE ORIENTED WITH THE GRAIN VERTICALLY (INCLUDING DRAWERS) SUCH THAT THE "GRAIN" MATCHES AND ALIGNED VERTICALLY FROM DRAWER TO DRAWER AND FROM DOOR TO DRAWER AS OCCURS.

G. ALL MECHANICAL GRILLS SHALL BE PAINTED TO MATCH ADJACENT WALL COLOR.

H. CARPET SHALL COMPLY WITH THE CBC SECTION 11B-302.2, HAVE A LEVEL LOOP, TEXTURED LOOP, LEVEL CUT PILE, LEVEL CUT/UNCUT PILE TEXTURE. PILE HEIGHT SHALL BE 1/2" MAXIMUM. CARPET EDGES SHALL COMPLY WITH CBC SECTION 11B-303.

ROOM FINISH REMARKS

1. INSTALL WAINSCOT 48" ABOVE INTEGRAL COVED BASE.
2. USE MATCHING COLOR WELDING ROD AT ALL FLOORING SEAMS.
3. SEE SHEET ID201 FOR FINISH LOCATIONS.
4. SEE INTERIOR ELEVATIONS FOR WALL FINISH LAYOUTS.
5. SEE RCP FOR CEILING MATERIAL LOCATIONS.
6. ALL NEW AND EXISTING GYPSUM BOARD WALLS AND CEILINGS TO BE PAINTED P-1. EXISTING WOOD FLOOR, WALLS, AND CEILINGS TO REMAIN AS IS.
7. PAINT CEILING BEAMS, P-1 TO MATCH CEILING.

Copyright © 2025
All ideas, designs, arrangements and plans indicated or represented by this drawing are owned by, and the property of, NICHOLS, MELBURG and ROSSETTO and were created, evolved and developed for use on, and in conjunction with, the specified project. None of such ideas, designs, arrangements or plans shall be used by, or disclosed to any person, firm or corporation for any purpose whatsoever without the written permission of NICHOLS, MELBURG and ROSSETTO.

NICHOLS MELBURG & ROSSETTO
ARCHITECTS + ENGINEERS
300 KNOLLCREST DRIVE
REDDING, CA. 96002
(530) 222-3300 (530) 222-3538 FAX
http://www.nmrdesign.com

CONSULTANTS

LICENSE STAMPS

LICENSED ARCHITECT
KYLE MATTI
C 27504
REN. 10/31/25
STATE OF CALIFORNIA

PROJECT NAME

TEHAMA COUNTY CORNING VETERAN'S HALL

1620 SOLANO ST.
CORNING, CA

SHEET TITLE

FINISH SCHEDULE

DRAWING STATUS

CONSTRUCTION DOCUMENTS

REVISIONS

Sym.	Description	Date

Drawn By	NGG
Date Issued	2/13/2025
Scale	12" = 1'-0"
Project No.	21-6497

SHEET No.

A700

Login Name: NatalieG
Plot Date: February 13, 2025 - 9:08 am
File Name: N:\Projects\6000Civic\2021\21-6497 Tehama Co. Corning Vets Hall\Drawings\CVH - A700 FINISH SCHEDULE.dwg
XREFS: x-CVH_Title Block

DOOR FRAME TYPES

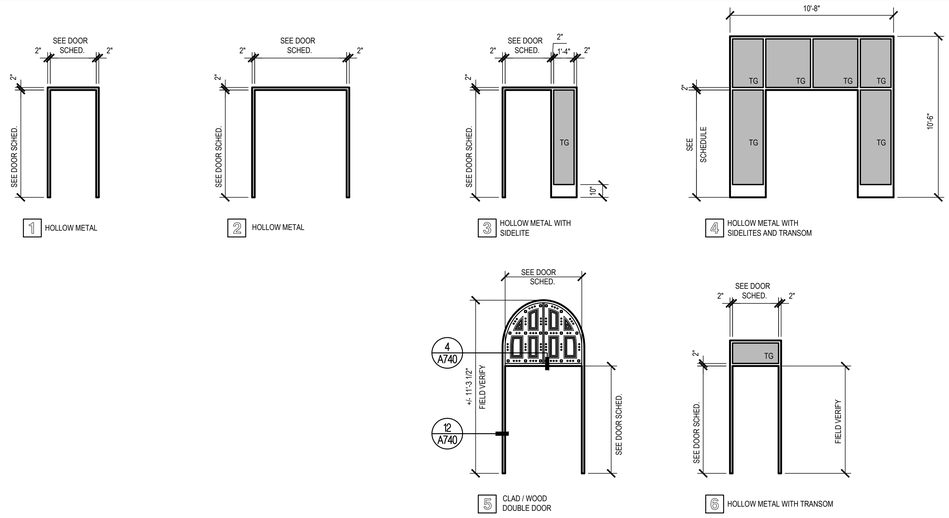

1 HOLLOW METAL

2 HOLLOW METAL

3 HOLLOW METAL WITH SIDELITE

4 HOLLOW METAL WITH SIDELITES AND TRANSOM

5 CLAD / WOOD DOUBLE DOOR

6 HOLLOW METAL WITH TRANSOM

DOOR TYPES

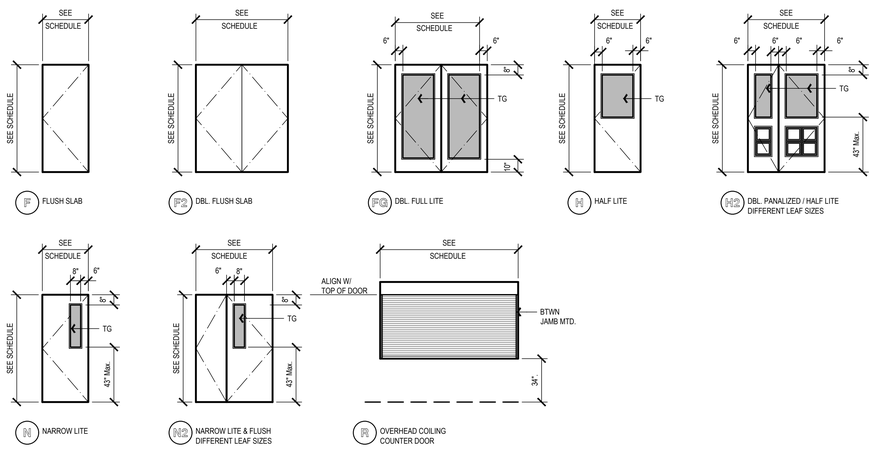

F FLUSH SLAB

F2 DBL. FLUSH SLAB

F4 DBL. FULL LITE

H HALF LITE

H2 DBL. PANALIZED / HALF LITE DIFFERENT LEAF SIZES

N NARROW LITE

N2 NARROW LITE & FLUSH DIFFERENT LEAF SIZES

R OVERHEAD COILING COUNTER DOOR

DOOR SCHEDULE

DOOR NUMBER	DOOR SIZE	DOOR TYPE	DOOR MATERIAL	DOOR FINISH	FRAME MATERIAL	FRAME TYPE	FRAME FINISH	DETAIL HEAD	DETAIL JAMB	DETAIL SILL	HARDWARE GROUP	SIGNAGE TEXT	REMARKS
101A	3/0 & 2/0 x 7/0	H2	CLAD/WOOD	CLAD/STAIN	CLAD/WOOD	5	CLAD/STAIN	4 / A740	12 / A740	9 / A740 SIM.	01	EXIT	AUTOMATIC DOOR OPERATOR
102A	2/4 x 7/0	F	PLAM	PRE-FIN	HM	1	PAINT	12 / A741	13 & 14 / A741		02	STORAGE	
103A	2/4 x 7/0	F	PLAM	PRE-FIN	HM	1	PAINT	12 / A741	13 & 14 / A741		03	STORAGE	
105A	3/0 x 7/0	H	PLAM	PRE-FIN	HM	1	PAINT	12 / A741	13 & 14 / A741		04	OFFICE	
106A	3/0 x 7/0	F	PLAM	PRE-FIN	HM	1	PAINT	12 / A741	13 & 14 / A741		05	MEN	
107A	3/0 x 7/0	F	PLAM	PRE-FIN	HM	1	PAINT	12 / A741	13 & 14 / A741		05	WOMEN	
108A	3/0 x 7/0	H	HM	PAINT	HM	3	PAINT	4 / A741	8 / A741	9 / A740 SIM.	06	EXIT	AUTOMATIC DOOR OPERATOR
109A	3/0 x 7/0	F	PLAM	PRE-FIN	HM	1	PAINT	12 / A741	13 & 14 / A741		07	JANITOR	
110A	PR 3/0 x 7/0	FG	PLAM	PRE-FIN	HM	2	PAINT	12 / A741 SIM.	14 / A741 SIM.		08	AUDITORIUM & LOBBY	
110B	PR 3/0 x 7/0	FG	PLAM	PRE-FIN	HM	2	PAINT	12 / A741 SIM.	14 / A741 SIM.		08	AUDITORIUM & LOBBY	
110C	3/0 & 2/0 x 7/0	N2	HM	PAINT	HM	2	PAINT	4 / A741	8 / A741	9 / A740 SIM.	01	EXIT	AUTOMATIC DOOR OPERATOR
111A	3/0 x 7/0	N	HM	PAINT	HM	1	PAINT	4 / A741	8 / A741	9 / A740 SIM.	06	EXIT	AUTOMATIC DOOR OPERATOR
112A	3/6 x 7/0	F	HM	PAINT	HM	1	PAINT	18 / A741	8 / A741	9 / A740 SIM.	09	EXIT	
113A	EXISTING			PAINT			PAINT				10	STORAGE 2	
113.1A	3/0 x 7/0	F	WOOD	PAINT	HM	1	PAINT	12 / A741	13 & 14 / A741		11	STORAGE 1	
114A	EXISTING			PAINT			PAINT				10	STORAGE 3	
115A	EXISTING			PAINT			PAINT				10	STORAGE 4	
116A	EXISTING			PAINT			PAINT				12	STORAGE 5	
117A	3/0 x 7/0	N	HM	PAINT	HM	1	PAINT	4 / A741	8 / A741	9 / A740 SIM.	13	EXIT	
117B	EXISTING			PAINT			PAINT				14	BASEMENT	
117C	EXISTING			PAINT			PAINT				14	EXIT	
118A	2/8 x 7/0	N	HM	PAINT	HM	6	PAINT	4 / A741	8 / A741	9 / A740 SIM.	15	EXIT	
118B	3/0 x 7/0	N	PLAM	PRE-FIN	HM	1	PAINT	12 / A741 SIM.	14 / A741 SIM.		16	BANQUET ROOM & KITCHEN	
118C	3/0 x 7/0	N	PLAM	PRE-FIN	HM	1	PAINT	12 / A741	13 & 14 / A741		17	AUDITORIUM & KITCHEN	
118D	9/0 x 4/2	R	S.S.	PRE-FIN	S.S.		PRE-FIN				18		
119A	PR 3/0 x 7/0	FG	PLAM	PRE-FIN	HM	4	PAINT	15 / A741	16 / A741		08	BANQUET ROOM & AUDITORIUM	
119B	PR 3/0 x 7/0	FG	PLAM	PRE-FIN	HM	4	PAINT	15 / A741	16 / A741		08	BANQUET ROOM & AUDITORIUM	
120A	3-0 x 7-0	FG	PLAM	PRE-FIN	HM	3	PAINT	12 / A741	13 & 14 / A741		19	SOCIAL ROOM & LOBBY	
120B	3-0 x 7-0	N	PLAM	PRE-FIN	HM	1	PAINT	15 / A741	16 / A741		20	SOCIAL ROOM & AUDITORIUM	
120C	3-0 x 7-0	N	PLAM	PRE-FIN	HM	1	PAINT	12 / A741	13 & 14 / A741		19	SOCIAL ROOM & BANQUET ROOM	
202A	(E) ROLLING DOOR			PAINT			PAINT				21		
202A	EXISTING			PAINT			PAINT				22	STORAGE	
203A	EXISTING			PAINT			PAINT				22	MECHANICAL	
204A	3/0 x 7/0	F	WOOD	PAINT	HM	1	PAINT	12 / A741	13 & 14 / A741		11	STORAGE	

DOOR & HARDWARE GENERAL NOTES

A. FOR SELF-CLOSING AND LATCHING DOORS, SEE DETAIL 5/G212 FOR CLEARANCES.

B. ALL EGRESS DOORS SHALL BE READILY OPENABLE FROM THE EGRESS SIDE WITHOUT THE USE OF A KEY OR SPECIAL KNOWLEDGE OR EFFORT. BOTH THE DEAD BOLT AND LATCH MUST REACT WITH A SINGLE HAND MOTION. CBC 10081.9.5.

C. A MAXIMUM OF 1/2" (BEVELED 1 : 2) TOTAL VERTICAL RISE IS REQUIRED AT EACH SIDE OF ALL DOORS, INCLUDING THRESHOLDS.

D. MAXIMUM DOOR OPENING EFFORT TO BE 5 POUNDS AT EXTERIOR AND INTERIOR DOORS, AND 15 POUNDS AT FIRE DOORS. CBC 11B-404.2.9

E. ALL DOORS TO BE EQUIPPED WITH SINGLE-EFFORT, NON-GRASP HARDWARE (I.E., LEVER) CENTERED BETWEEN 34 INCHES AND 44 INCHES ABOVE THE FLOOR. CBC 11B-404.2.7

F. FOR DOORS WITH CLOSERS, THE SWEEP PERIOD OF THE CLOSER SHALL BE ADJUSTED SO THAT FROM AN OPEN POSITION OF 90 DEGREES, THE TIME REQUIRED TO MOVE THE DOOR TO A POSITION OF 12 DEGREES FROM THE LATCH IS 5 SECONDS MINIMUM. CBC 11B-404.2.8.1

G. PANIC AND FIRE EXIT HARDWARE SHALL COMPLY WITH CBC 1008.1.10 AND BE LISTED IN ACCORDANCE WITH UL 305.

H. ALL EXTERIOR DOORS SHALL BE TIGHTLY WEATHER-SEALED AND SELF-CLOSING. EXTERIOR HARDWARE SHALL BE COMMERCIAL GRADE & SELF LOCKING PER RMC 6.12.180 (F) & RMC 6.12.210.

WINDOW TYPES

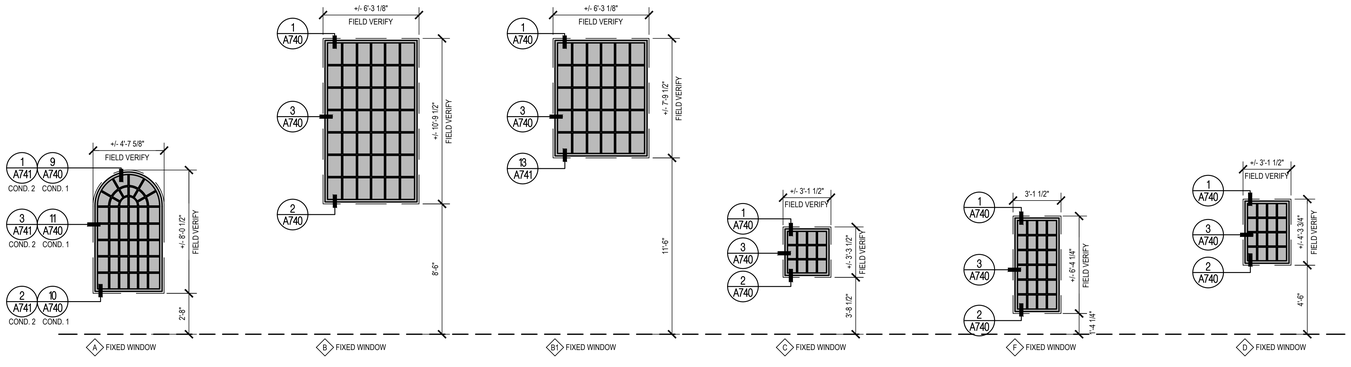

A FIXED WINDOW

B FIXED WINDOW

B1 FIXED WINDOW

C FIXED WINDOW

E FIXED WINDOW

D FIXED WINDOW

Copyright © 2025
All ideas, designs, arrangements and plans indicated or represented by this drawing are owned by, and the property of, NICHOLS, MELBURG and ROSSETTO and were created, evolved and developed for use on, and in conjunction with, the specified project. None of such ideas, designs, arrangements and plans shall be used, or disclosed to any person, firm or corporation for any purpose whatsoever without the written permission of NICHOLS, MELBURG and ROSSETTO.

NICHOLS MELBURG & ROSSETTO
ARCHITECTS + ENGINEERS
300 KNOLLCREST DRIVE
REDDING, CA. 96002
(530) 222-3300 (530) 222-3538 FAX
http://www.nmrdesign.com

CONSULTANTS

LICENSE STAMPS

LICENSED ARCHITECT KYLE MATTHEW KEPPER C 27504 REN. 10/31/25 STATE OF CALIFORNIA

PROJECT NAME

TEHAMA COUNTY
CORNING
VETERAN'S HALL

1620 SOLANO ST.
CORNING, CA

SHEET TITLE

DOOR & WINDOW SCHEDULES

DRAWING STATUS

CONSTRUCTION DOCUMENTS

REVISIONS

Sym.	Description	Date

Drawn By	KP
Date Issued	2/13/2025
Scale	1/4" = 1'-0"
Project No.	21-6497

SHEET No.

A710

Login Name: keiperP
Plot Date: February 13, 2025 - 9:01 am
File Name: N:\Projects\6000s\Cmb\2021\21-6497 Tehama Co. Corning Vets Hall\Drawings\CVH-Sched\dwg
TEMPLATE: A-CVH-L-Title Block

FLOOR

ALL ITEMS ARE NEW UNLESS LISTED AS (E) OR EXISTING

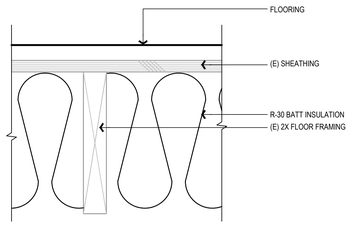

F 1 EXISTING FLOOR WITH NEW INSULATION
NON- FIRE RATED SCALE: 3" = 1'-0"

CEILING

ALL ITEMS ARE NEW UNLESS LISTED AS (E) OR EXISTING

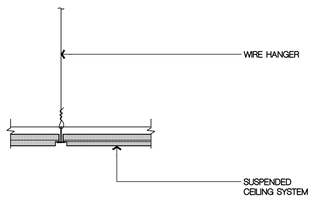

C 1 SUSPENDED ACOUSTICAL CEILING SYSTEM
NON- FIRE RATED SCALE: 3" = 1'-0"

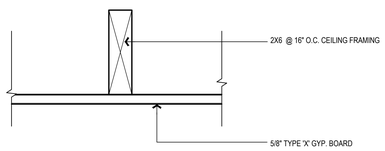

C 2 GYPSUM BOARD CEILING SYSTEM
NON- FIRE RATED SCALE: 3" = 1'-0"

ROOF

ALL ITEMS ARE NEW UNLESS LISTED AS (E) OR EXISTING

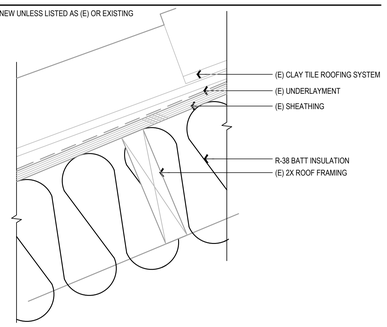

R 1 EXISTING CLAY TILE ROOF WITH NEW INSULATION
NON- FIRE RATED SCALE: 3" = 1'-0"

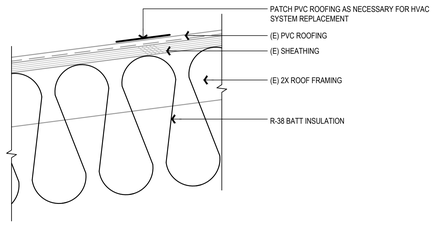

R 2 EXISTING PVC ROOF WITH NEW INSULATION
NON- FIRE RATED SCALE: 3" = 1'-0"

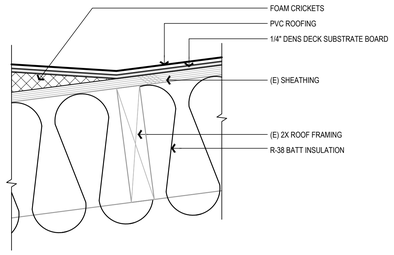

R 3 NEW PVC ROOF AT EXISTING FRAMING
NON- FIRE RATED SCALE: 3" = 1'-0"

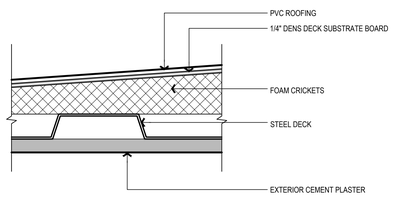

R 4 NEW PVC ROOF AT STEEL DECKING
NON- FIRE RATED SCALE: 3" = 1'-0"

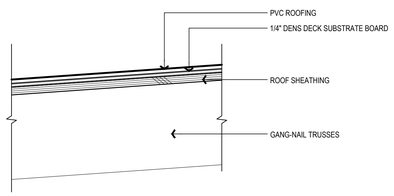

R 5 NEW PVC ROOF AT EXISTING FRAMING
NON- FIRE RATED SCALE: 3" = 1'-0"

INTERIOR WALLS

ALL ITEMS ARE NEW UNLESS LISTED AS (E) OR EXISTING

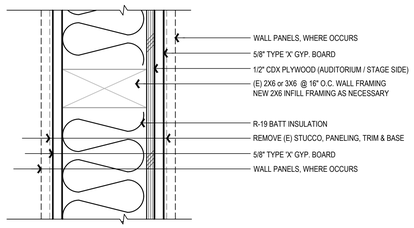

W 4 EXISTING INTERIOR WALL WITH NEW INSULATION AND FINISHES
NON- FIRE RATED SCALE: 3" = 1'-0"

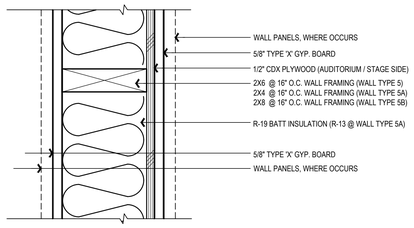

W 5 NEW INTERIOR WALL
NON- FIRE RATED SCALE: 3" = 1'-0"

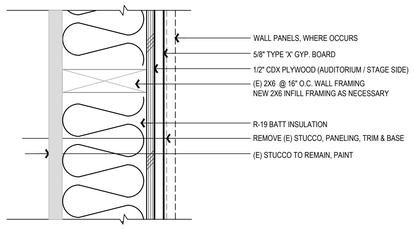

W 6 EXISTING INTERIOR WALL WITH NEW INSULATION AND FINISHES
NON- FIRE RATED SCALE: 3" = 1'-0"

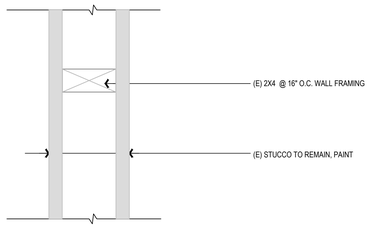

W 7 EXISTING INTERIOR WALL WITH EXISTING WALL FINISHES
NON- FIRE RATED SCALE: 3" = 1'-0"

EXTERIOR WALLS

ALL ITEMS ARE NEW UNLESS LISTED AS (E) OR EXISTING

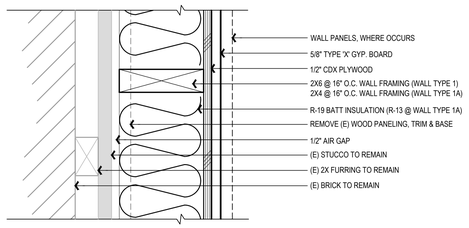

W 1 TYPICAL EXTERIOR BRICK WALL WITH NEW INTERIOR WOOD WALL
NON- FIRE RATED SCALE: 3" = 1'-0"

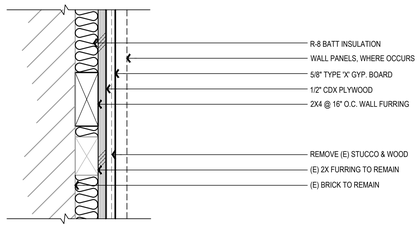

W 2 TYPICAL EXTERIOR BRICK WALL WITH NEW INTERIOR FURRING
NON- FIRE RATED SCALE: 3" = 1'-0"

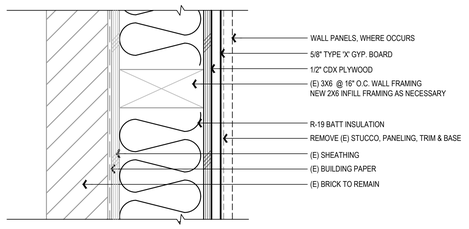

W 3 EXTERIOR 3X6 STUD WALL WITH BRICK VENEER
NON- FIRE RATED SCALE: 3" = 1'-0"

Copyright © 2025
All ideas, designs, arrangements and plans indicated or represented by this drawing are owned by, and the property of, NICHOLS, MELBURG and ROSSETTO and were created, evolved and developed for use on, and in conjunction with, the specified project. None of such ideas, designs, arrangements and plans shall be used, or disclosed to any person, firm or corporation for any purpose whatsoever without the written permission of NICHOLS, MELBURG and ROSSETTO.

NICHOLS MELBURG & ROSSETTO
ARCHITECTS + ENGINEERS
300 KNOLLCREST DRIVE
REDDING, CA. 96002
(530) 222-3300 (530) 222-3538 FAX
http://www.nmrdesign.com

CONSULTANTS

LICENSE STAMPS

LICENSED ARCHITECT
KYLE MATTHEWS
C 27504
REN. 10/31/25
STATE OF CALIFORNIA

PROJECT NAME

TEHAMA COUNTY
CORNING
VETERAN'S HALL

1620 SOLANO ST.
CORNING, CA

SHEET TITLE

CONSTRUCTION ASSEMBLIES

DRAWING STATUS

CONSTRUCTION DOCUMENTS

REVISIONS

Sym.	Description	Date

Drawn By	KP
Date Issued	2/13/2025
Scale	AS NOTED
Project No.	21-6497

SHEET No.

A720

Login Name: KenrP
Plot Date: February 13, 2025 - 9:24 am
File Name: N:\Projects\6000Series\2021\21-6497 Tehama Co. Corning Vets Hall\Drawings\CVH - ASSEMBLIES.dwg
PAGE 1 to CVH_Title Block

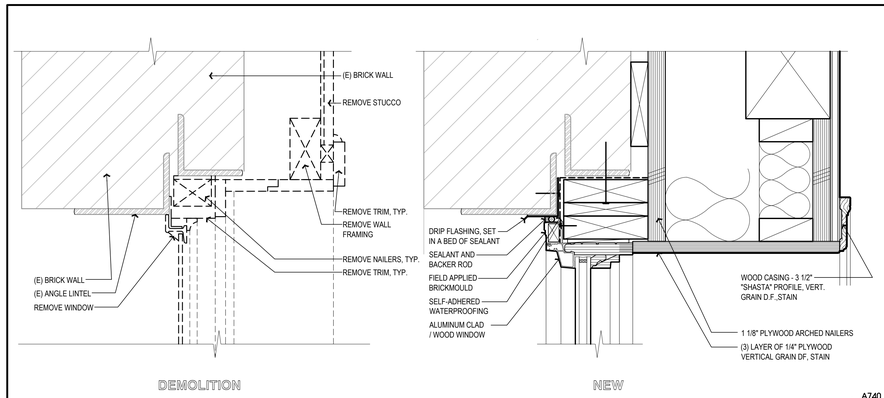

A740

WINDOW HEAD AT WINDOW A - CONDITION 1

SCALE: 3" = 1'-0"

9

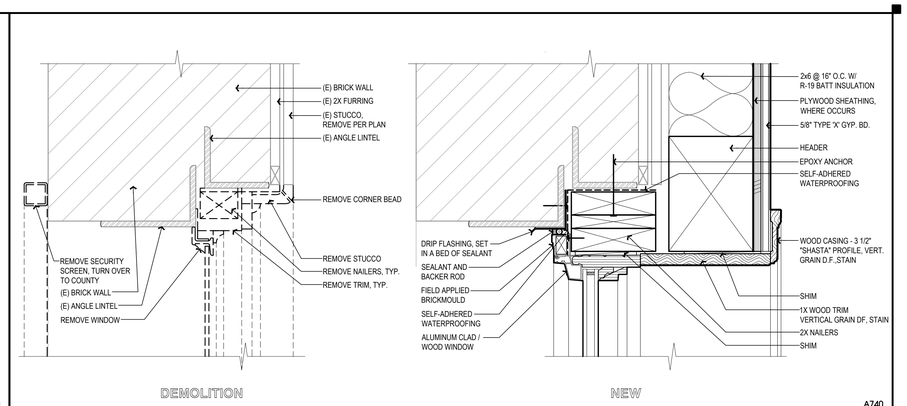

A740

WINDOW HEAD AT WINDOWS B, C, D & F

SCALE: 3" = 1'-0"

1

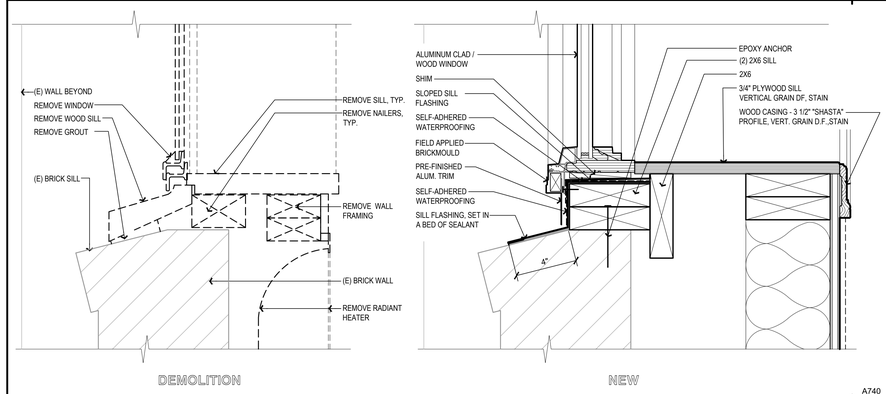

A740

WINDOW SILL AT WINDOW A - CONDITION 1

SCALE: 3" = 1'-0"

10

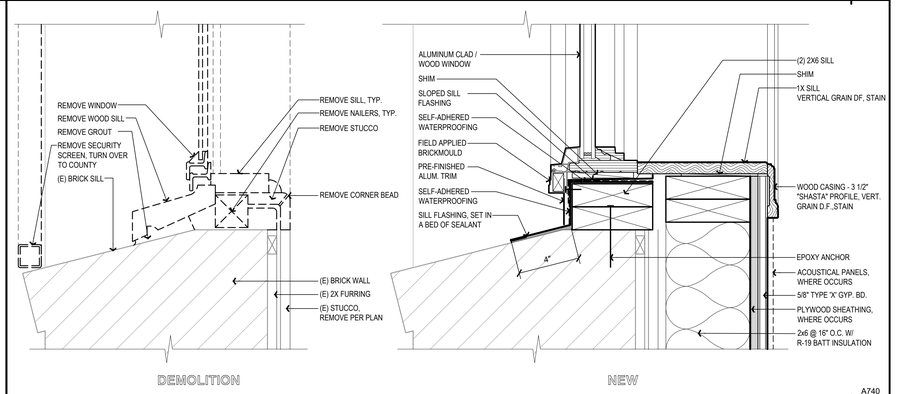

A740

WINDOW SILL AT WINDOWS B, C, D & F

SCALE: 3" = 1'-0"

2

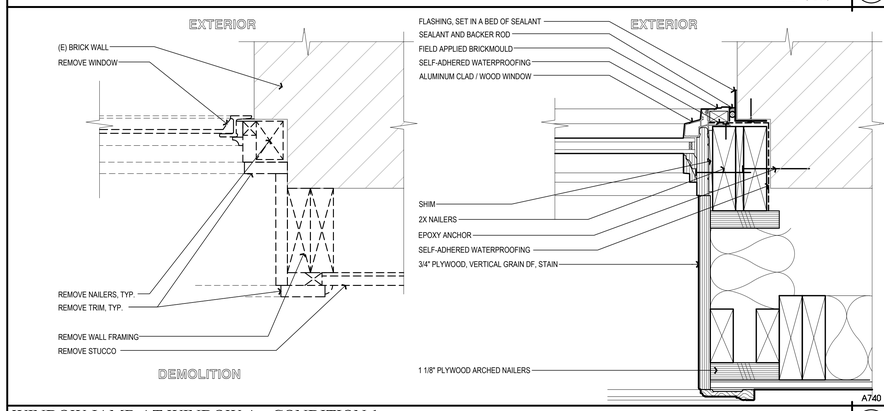

A740

WINDOW JAMB AT WINDOW A - CONDITION 1

SCALE: 3" = 1'-0"

11

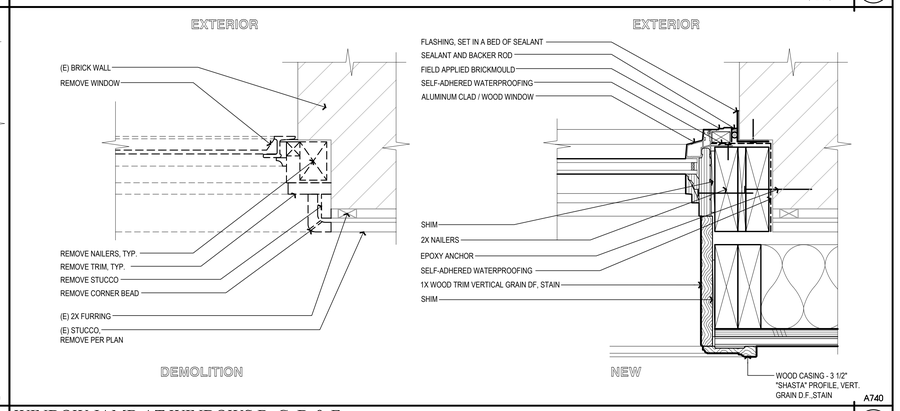

A740

WINDOW JAMB AT WINDOWS B, C, D & F

SCALE: 3" = 1'-0"

3

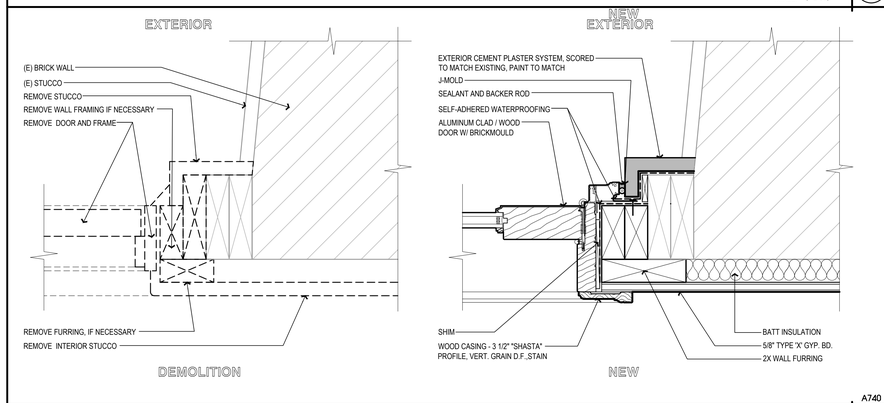

A740

MAIN EXTERIOR DOOR JAMB

SCALE: 3" = 1'-0"

12

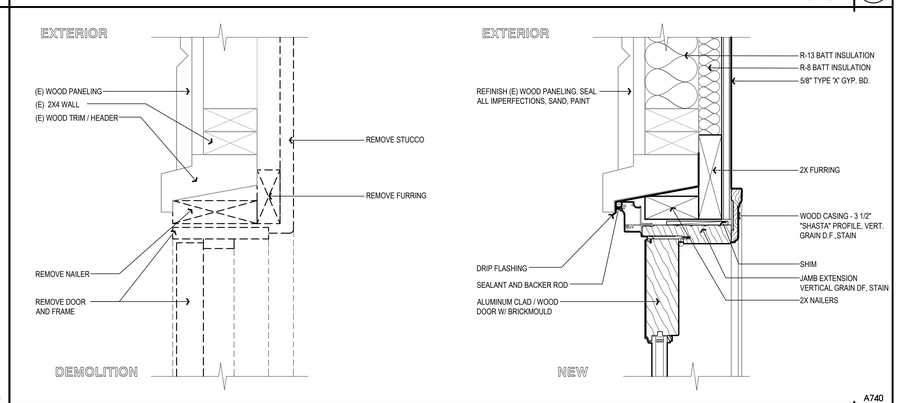

A740

FRONT DOOR HEAD

SCALE: 3" = 1'-0"

4

Copyright © 2025

All ideas, designs, arrangements and plans indicated or represented by this drawing are owned by, and the property of, NICHOLS, MELBURG and ROSSETTO and were created, evolved and developed for use on, and in conjunction with, the specified project. None of such ideas, designs, arrangements and plans shall be used by or disclosed to any person, firm or corporation for any purpose whatsoever without the written permission of NICHOLS, MELBURG and ROSSETTO.

NICHOLS MELBURG & ROSSETTO
ARCHITECTS + ENGINEERS
300 KNOLLCREST DRIVE
REDDING, CA. 96002
(530) 222-3300 (530) 222-3538 FAX
http://www.nmrdesign.com

CONSULTANTS

LICENSE STAMPS

LICENSED ARCHITECT
KYLE MATTY
C 27504
REN. 10/31/25
STATE OF CALIFORNIA

PROJECT NAME

TEHAMA COUNTY
CORNING
VETERAN'S HALL

1630 SOLANO ST.
CORNING, CA

SHEET TITLE

EXTERIOR WINDOW & DOOR DETAILS

DRAWING STATUS

CONSTRUCTION DOCUMENTS

REVISIONS

Sym.	Description	Date

Drawn By	KP
Date Issued	2/13/2025
Scale	AS NOTED
Project No.	21-6497

SHEET No.

A740

Login Name: KenerP
Plot Date: February 13, 2025 - 9:56 am
File Name: N:\Projects\6000CAs\C6210-21-6497 Tehama Co. Corning Vets Hall\Drawing\CH3 - Window Details.dwg
XREFS: x-CHL; Title Block; Window sill; Window head; Window jamb; Window sill at window A; Window head at window A; Window jamb at window A; Window sill at window A2; Window head at window A2; Window jamb at window A2; Window sill at window A1; Window head at window A1; Window jamb at window A1; EXT HM DOOR HEAD ; EXT HM DOOR JAMB ; THRESHOLD (RIGHT DOOR) ; THRESHOLD (RIGHT DOOR) ; CONCRETE TO CARPET ; TYP. WELDED HM FRAME ANCHORS ; INTERIOR HM DOOR HEAD ; INTERIOR HM DOOR HINGE ; HM DOOR LATCH ; INT HM FRAME WINDOW HE

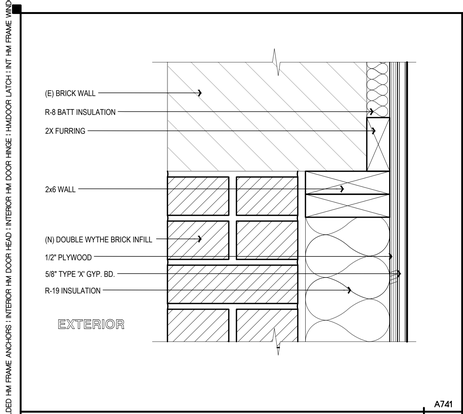

A741
WALL INFILL
SCALE: 3" = 1'-0"
17

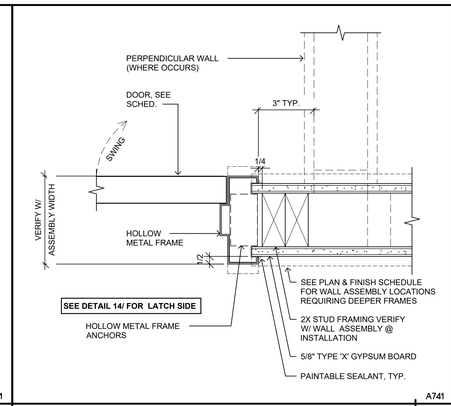

A741
INTERIOR HM DOOR HINGE SIDE
SCALE: 3" = 1'-0"
13

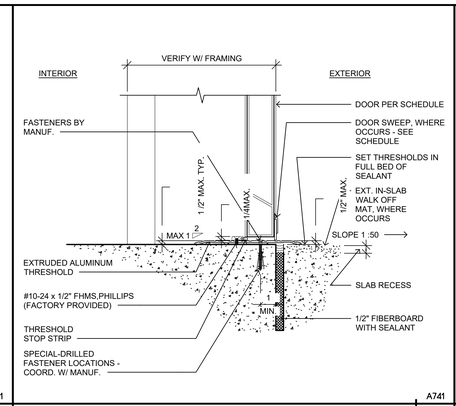

A741
THRESHOLD AT EXTERIOR DOOR CONCRETE TO CONCRETE
SCALE: 3" = 1'-0"
9

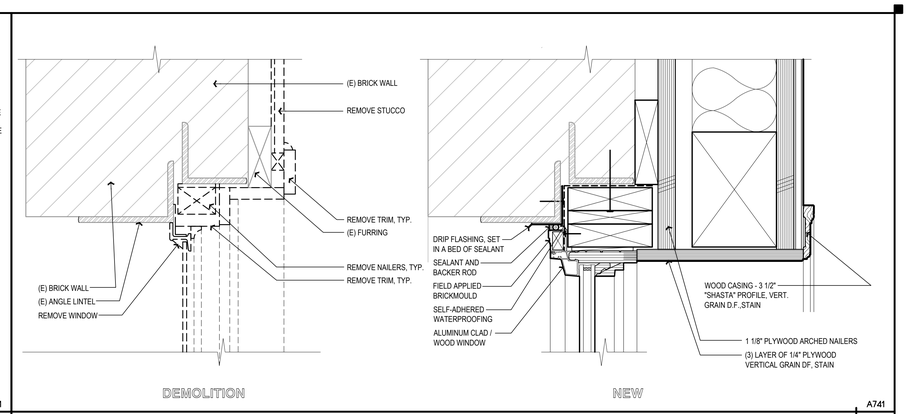

A741
WINDOW HEAD AT WINDOW A - CONDITION 2
SCALE: 3" = 1'-0"
1

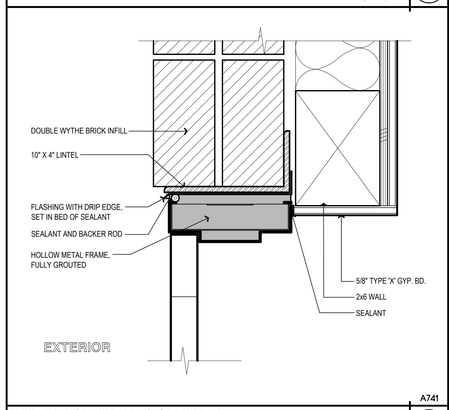

A741
EXTERIOR HM DOOR HEAD
SCALE: 3" = 1'-0"
18

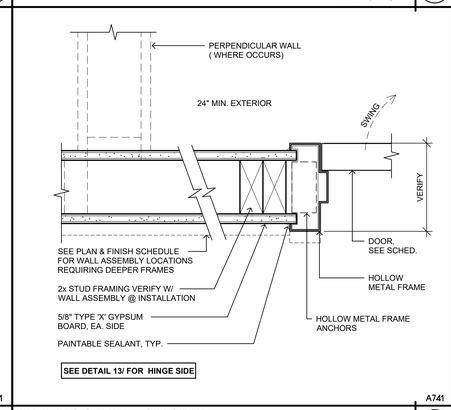

A741
H.M. DOOR LATCH SIDE
SCALE: 3" = 1'-0"
14

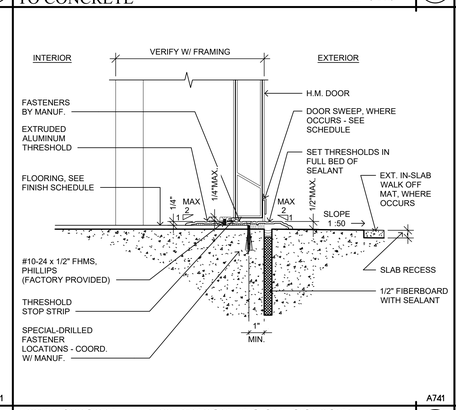

A741
THRESHOLD AT EXTERIOR DOOR CONCRETE TO CARPET
SCALE: 3" = 1'-0"
10

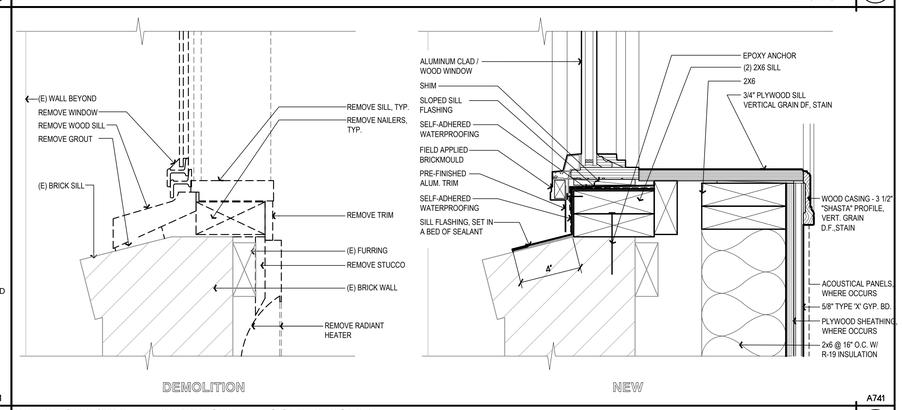

A741
WINDOW SILL AT WINDOW A - CONDITION 2
SCALE: 3" = 1'-0"
2

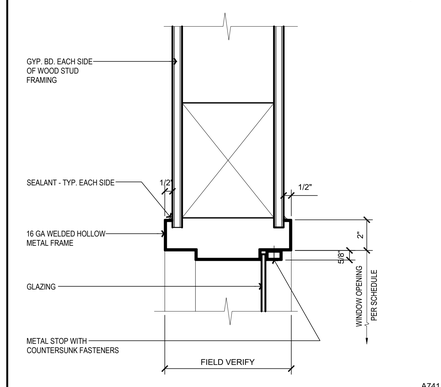

A741
INT HOLLOW METAL FRAME WINDOW HEADER
SCALE: 3" = 1'-0"
15

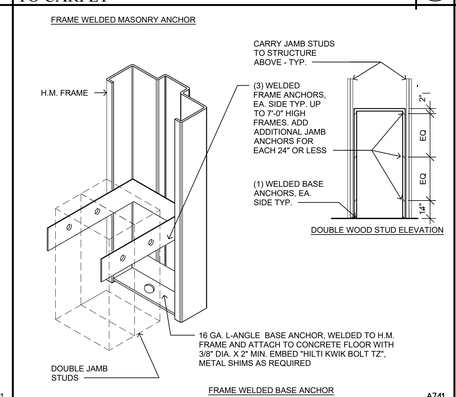

A741
TYPICAL WELDED H.M. FRAME ANCHORS AT WOOD STUDS
SCALE: 3" = 1'-0"
11

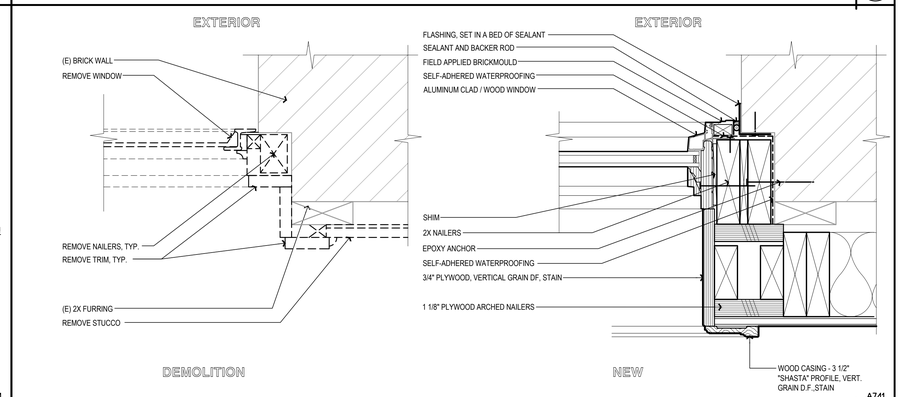

A741
WINDOW JAMB AT WINDOW A - CONDITION 2
SCALE: 3" = 1'-0"
3

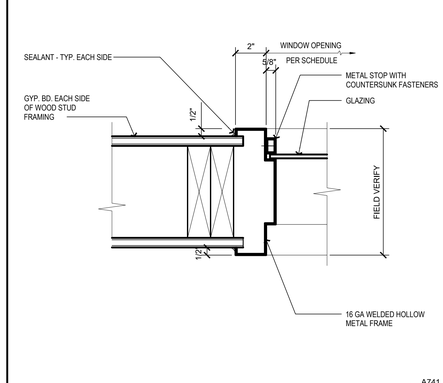

A741
INT HOLLOW METAL FRAME WINDOW JAMB
SCALE: 3" = 1'-0"
16

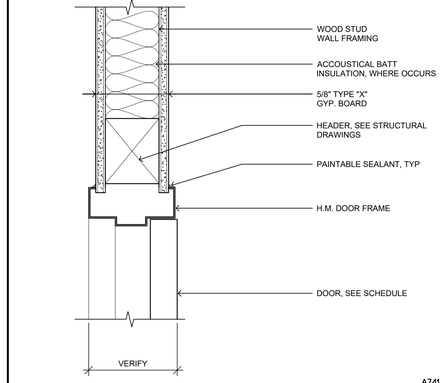

A741
INTERIOR HM DOOR HEAD
SCALE: 3" = 1'-0"
12

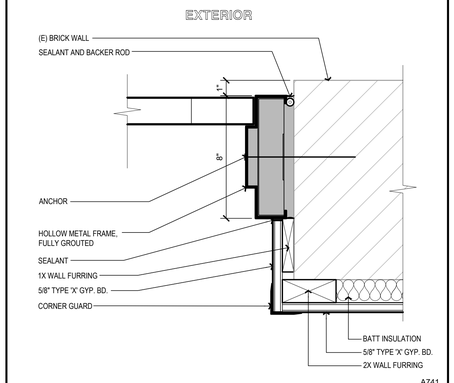

A741
EXTERIOR HM DOOR JAMB
SCALE: 3" = 1'-0"
8

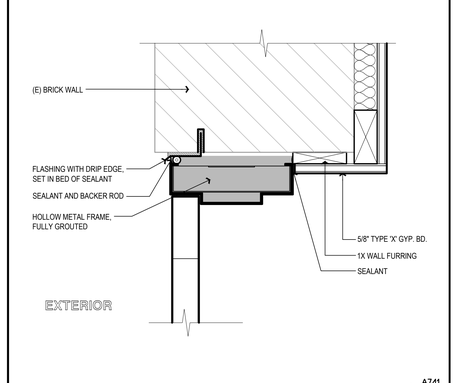

A741
EXTERIOR HM DOOR HEAD
SCALE: 3" = 1'-0"
4

Copyright © 2025
All ideas, designs, arrangements and plans indicated or represented by this drawing are owned by, and the property of, NICHOLS, MELBURG and ROSSETTO and were created, evolved and developed for use on, and in conjunction with, the specified project. None of such ideas, designs, arrangements and plans shall be used by or disclosed to any person, firm or corporation for any purpose whatsoever without the written permission of NICHOLS, MELBURG and ROSSETTO.

NICHOLS MELBURG & ROSSETTO
ARCHITECTS + ENGINEERS
300 KNOLLCREST DRIVE
REDDING, CA. 96002
(530) 222-3300 (530) 222-3538 FAX
http://www.nmrdesign.com

CONSULTANTS

LICENSE STAMPS

LICENSED ARCHITECT
KYLE MATTHEWS
C 27504
REN. 10/31/25
STATE OF CALIFORNIA

PROJECT NAME

TEHAMA COUNTY
CORNING
VETERAN'S HALL

1820 SOLANO ST.
CORNING, CA

SHEET TITLE

DOOR & WINDOW DETAILS

DRAWING STATUS

CONSTRUCTION DOCUMENTS

REVISIONS

Sym.	Description	Date

Drawn By	KP
Date Issued	2/13/2025
Scale	AS NOTED
Project No.	21-6497

SHEET No.

A741

Login Name: kayeP
Plot Date: February 13, 2025 - 9:06 am
File Name: N:\Projects\6000Jobs\2021\6497 Tehama Co. Corning Vets Hall\Drawings\CH1 - Window Details.dwg
XREFS: X-CHI_Title Block | Window Sill | Window Head | Window Jamb | Window Sill at window A1 | Window Head at window A1 | Window Jamb at window A1 | Window Jamb at window A2 | Window Head at window A2 | Window Sill at window A2 | Window Jamb at window A2 | Main Exterior Door Head | Main Exterior Door Jamb | EXT HM DOOR HEAD | EXT HM DOOR JAMB | THRESHOLD @EXT DOOR | THRESHOLD @EXT DOOR - CONCRETE TO CARPET | TYP. WELDED HM FRAME ANCHORS | INTERIOR HM DOOR HEAD | INTERIOR HM DOOR HINGE | HM DOOR LATCH | INT HM FRAME WINDOW HE

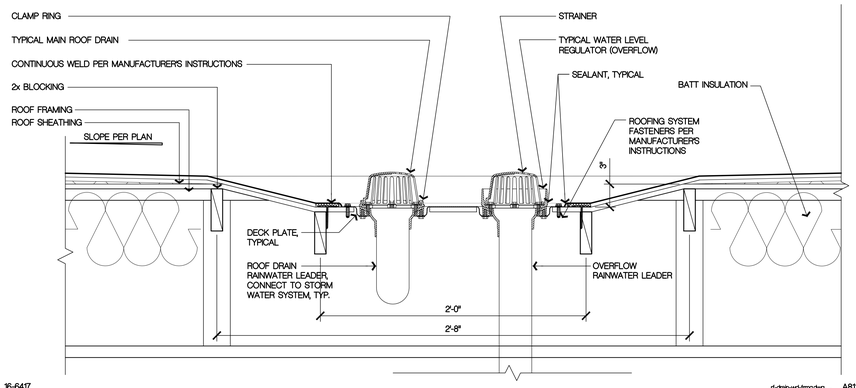

ROOF DRAIN SUMP

SCALE: 1-1/2" = 1'-0" (13)

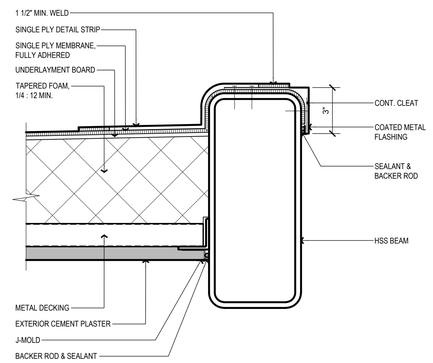

ROOF EDGE @ FRONT ENTRY CANOPY

SCALE: 3"=1'-0" (9)

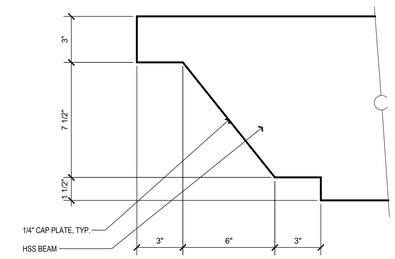

BEAM BEAM END

SCALE: 3"=1'-0" (5)

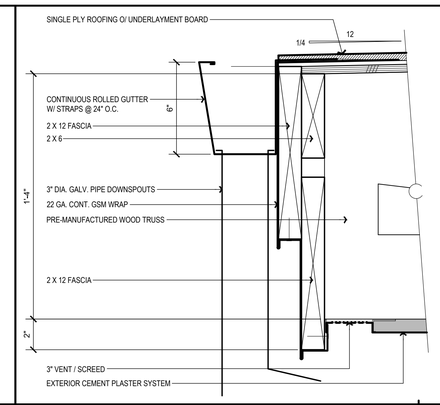

ROOF EDGE

SCALE: 3"=1'-0" (1)

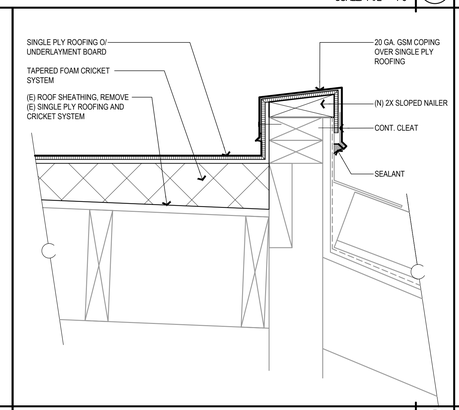

PARAPET CAP

SCALE: 3"=1'-0" (14)

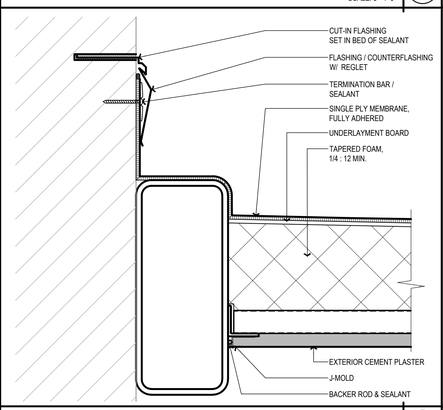

REGLET @ FRONT ENTRY CANOPY

SCALE: 3"=1'-0" (10)

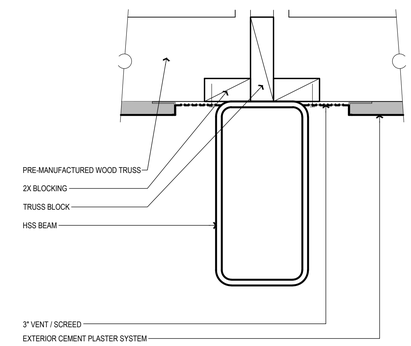

BEAM AT SOFFIT

SCALE: 3"=1'-0" (6)

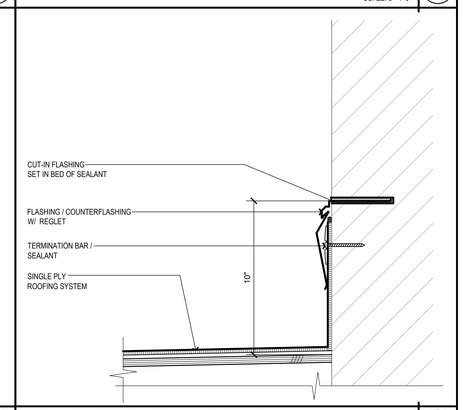

REGLET AT (E) BRICK WALL

SCALE: 3"=1'-0" (2)

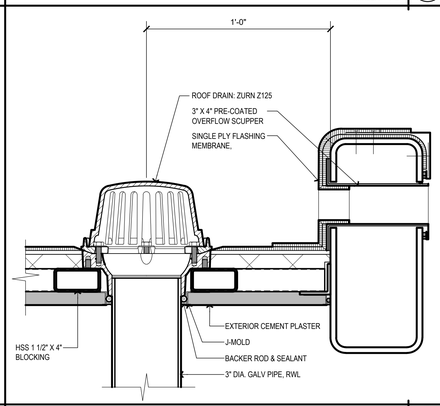

ROOF DRAIN @ FRONT ENTRY CANOPY

SCALE: 3"=1'-0" (11)

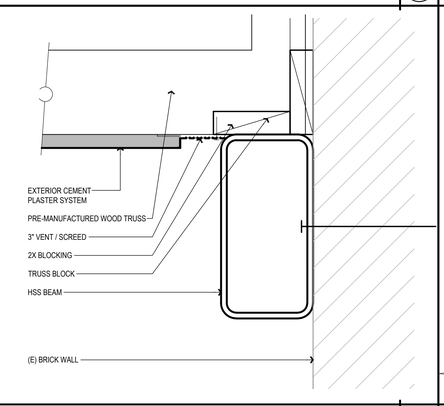

BEAM AT WALL

SCALE: 3"=1'-0" (7)

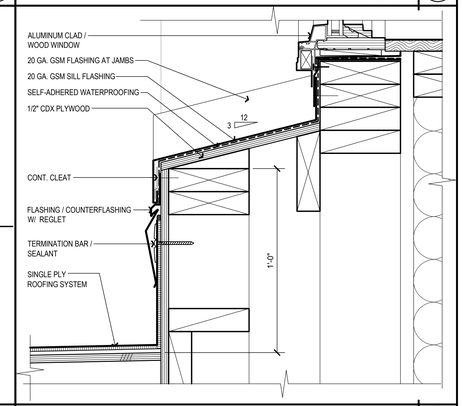

REGLET AT INFILL WALL

SCALE: 3"=1'-0" (3)

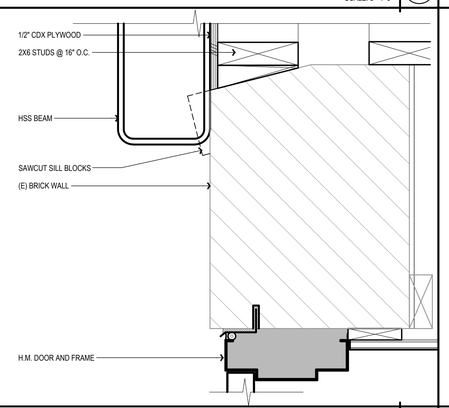

LEDGER AT WALL

SCALE: 3"=1'-0" (8)

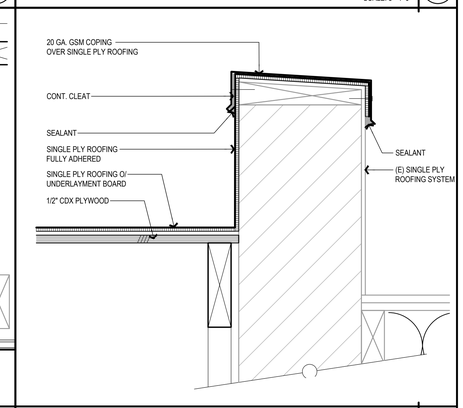

PARAPET CAP

SCALE: 3"=1'-0" (4)

Copyright © 2025

All ideas, designs, arrangements and plans indicated or represented by this drawing are owned by, and the property of, NICHOLS, MELBURG and ROSSETTO and were created, evolved and developed for use on, and in conjunction with, the specified project. None of such ideas, designs, arrangements or plans shall be used by, or disclosed to any person, firm or corporation for any purpose whatsoever, without the written permission of NICHOLS, MELBURG and ROSSETTO.

NICHOLS MELBURG & ROSSETTO
ARCHITECTS + ENGINEERS
300 KNOLLCREST DRIVE
REDDING, CA. 96002
(530) 222-3300 (530) 222-3538 FAX
http://www.nmrdesign.com

CONSULTANTS

LICENSE STAMPS

LICENSED ARCHITECT
KYLE MATTHEWS
C 27504
REN. 10/31/25
STATE OF CALIFORNIA

PROJECT NAME

TEHAMA COUNTY
CORNING
VETERAN'S HALL

1620 SOLANO ST.
CORNING, CA

SHEET TITLE

EXTERIOR DETAILS

DRAWING STATUS

CONSTRUCTION DOCUMENTS

REVISIONS

Sym.	Description	Date

Drawn By	KP
Date Issued	2/13/2025
Scale	AS NOTED
Project No.	21-6497

SHEET No.

A801

Login Name: Karenf
Plot Date/Time: February 13, 2025 - 9:08 am
File Name: N:\Projects\6000Jobs\6200\21-6497 Tehama Co. Corning Vets Hall\Drawings\CVH - Exterior Details.dwg
PREFS: x-CVH_Title Block | rod-edge | beam vent | BEAM END | beam LEDGER | ROOF REGLET | LOW ROOF AT WINDOW | beam LEDGER AT DOOR | PARAPET CAP | FRONT - ROOF EDGE | FRONT - REGLET | FRONT - ROOF DRAIN | rf-drain-wd-frmg | UPPER PARAPET CAP

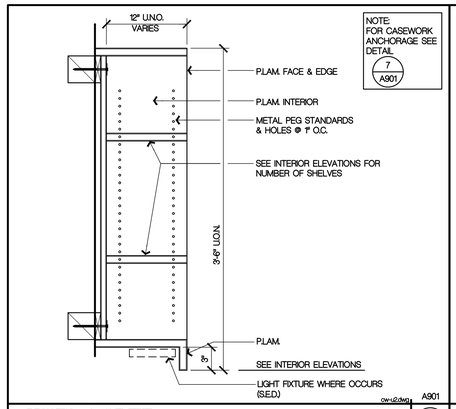

ow-U2.dwg A901

UPPER CABINET OPEN SHELVES (U2)

SCALE: 1 1/2"=1'-0" — 9

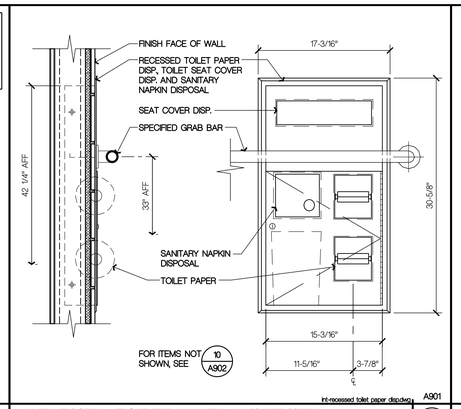

int-recessed toilet paper disp.dwg A901

RECESSED TOILET PAPER DISPENSER

SCALE: 1 1/2"=1'-0" — 5

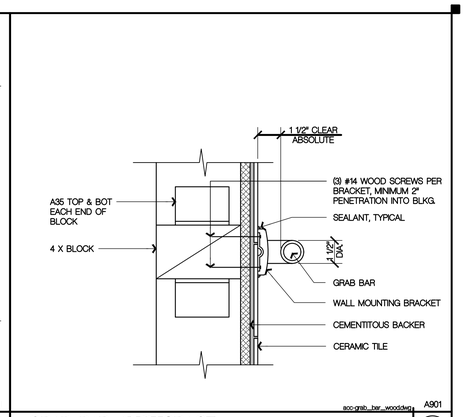

acc-grab...bar...wood.dwg A901

GRAB BAR ANCHORAGE AT WOOD FRAMING

SCALE: 3"=1'-0" — 1

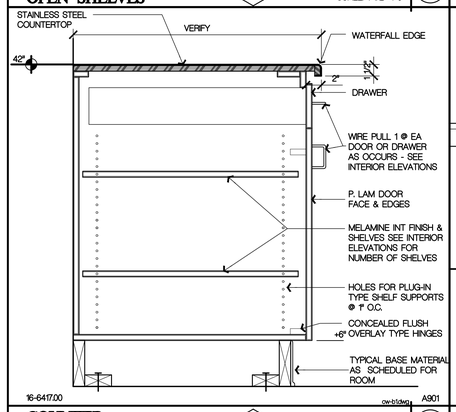

ow-b1.dwg A901

COUNTER (B1)

SCALE: 1-1/2"=1'-0" — 10

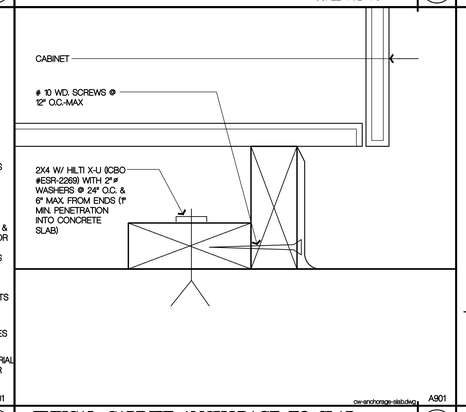

ow-anchorage-slab.dwg A901

TYPICAL CABINET ANCHORAGE TO SLAB

SCALE: 6"=1'-0" — 6

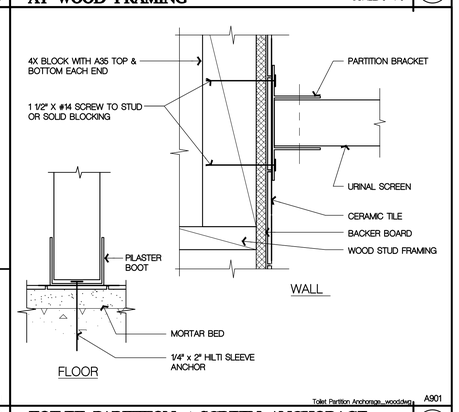

Toilet Partition Anchorage...wood.dwg A901

TOILET PARTITION / SCREEN ANCHORAGE AT WOOD FRAMING

SCALE: 3"=1'-0" — 2

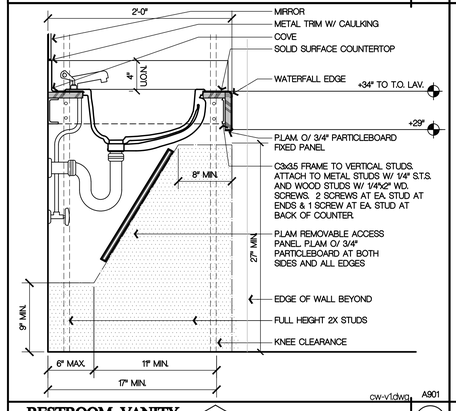

cw-v1.dwg A901

RESTROOM VANITY AT COUNTER (V1)

SCALE: 1"=1'-0" — 11

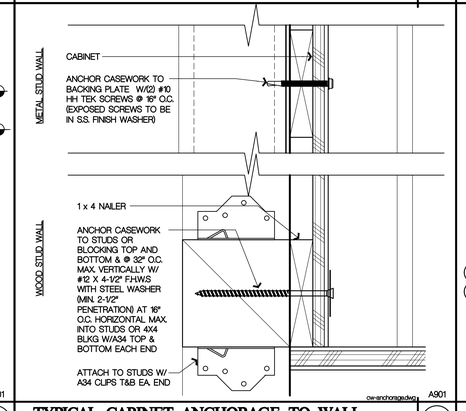

ow-anchorage.dwg A901

TYPICAL CABINET ANCHORAGE TO WALL

SCALE: 6"=1'-0" — 7

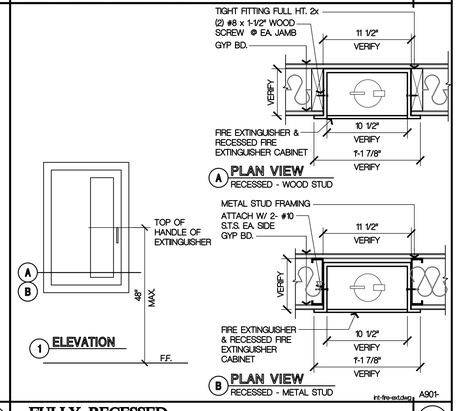

int-fire-ext.dwg A901-

FULLY RECESSED FIRE EXTINGUISHER CABINETS

SCALE: 1 1/2"=1'-0" — 3

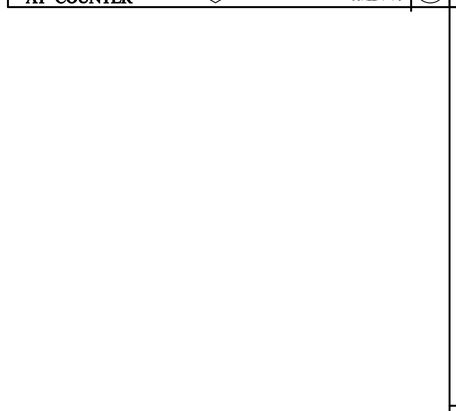

ow-u1.dwg A901

UPPER CABINET (U1)

SCALE: 1 1/2"=1'-0" — 8

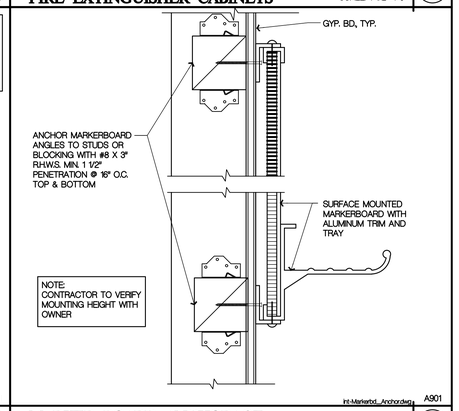

int-Markerbd_Anchor.dwg A901

MARKER BOARD ANCHORAGE

SCALE: 3"=1'-0" — 4

Copyright © 2025
All ideas, designs, arrangements and plans indicated or represented by this drawing are owned by, and the property of, NICHOLS, MELBURG and ROSSETTO and were created, evolved and developed for use on, and in conjunction with, the specified project. None of such ideas, designs, arrangements and plans shall be used, or disclosed to any person, firm or corporation for any purpose whatsoever, without the written permission of NICHOLS, MELBURG and ROSSETTO.

NICHOLS MELBURG & ROSSETTO
ARCHITECTS + ENGINEERS
300 KNOLLCREST DRIVE
REDDING, CA. 96002
(530) 222-3300 (530) 222-3538 FAX
http://www.nmrdesign.com

CONSULTANTS

LICENSE STAMPS

LICENSED ARCHITECT — KYLE MATTHEWS — C 27504 — REN. 10/31/25 — STATE OF CALIFORNIA

PROJECT NAME

TEHAMA COUNTY
CORNING
VETERAN'S HALL

1620 SOLANO ST.
CORNING, CA

SHEET TITLE

INTERIOR DETAILS

DRAWING STATUS

CONSTRUCTION DOCUMENTS

REVISIONS

Sym.	Description	Date

Drawn By	KP
Date Issued	2/13/2025
Scale	AS NOTED
Project No.	21-6497

SHEET No.

A901

Login Name: KenerP
Plot Date: February 13, 2025 - 9:41 am
File Name: N:\Projects\6000Ln\6207\21-6497 Tehama Co. Corning Vets Hall\Drawings\CVH-ART DET-ALL.dwg
HSPS: x-CVH_Title Block | Monotext Roller Shade | Hanger Roller Shade | Hanger Closed Base | Trip Set at Resilient Flooring | Wall Protection WP-1 | FRL - FRP Wall Protection | Acoustical Wall Protection AWP-1 | Transition Strips | sac-grab_bar...wood | Toilet Partition Anchorage...wood | int-fire-ext | int-Markerbd_Anchor | int-recessed toilet paper disp | ow-anchorage | ow-anchorage-slab | ow-v1 | ow-u2 | ow-b1 | ow-u1 | sac-dg_notes | sac-dg_swiftt | sac-dg_attachment | sac-dg_acoust | sac-dg_fixed | sac-dg_dlr | sac-dg_post-vehy | sac-dg_acoustic | dg-sport-ct-det1 | sac-dg-1

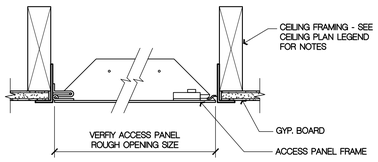

ACCESS PANEL AT FRAMED GYP. BOARD CEILING — SCALE: 3"=1'-0" — A902 / 13

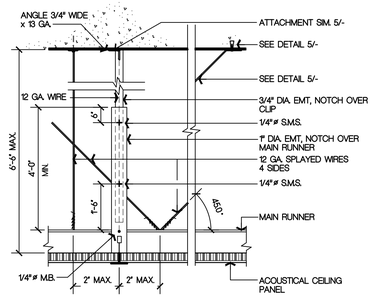

SUSP. ACOUSTICAL CLG. COMPRESSION POST / WIRE BRACE — SCALE: NTS — A902 / 9

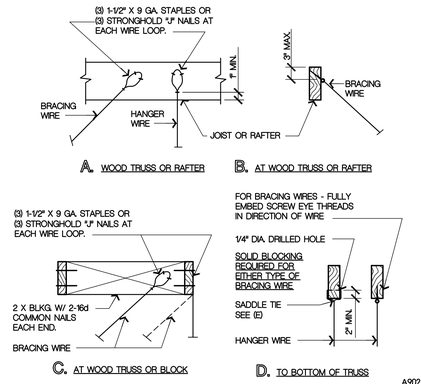

SEISMIC BRACING WIRE ATTACHMENT — SCALE: NTS — A902 / 5

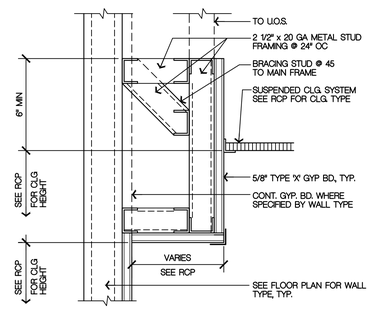

GYP BD. SOFFIT AT SUSPENDED CLG. — SCALE: 1/2"=1'-0" — A902 / 14

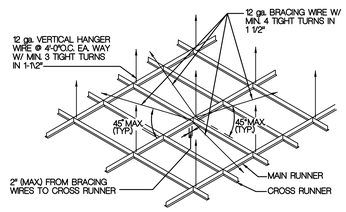

DIAGRAMATIC ACOUSTICAL CEILING — SCALE: NTS — A902 / 10

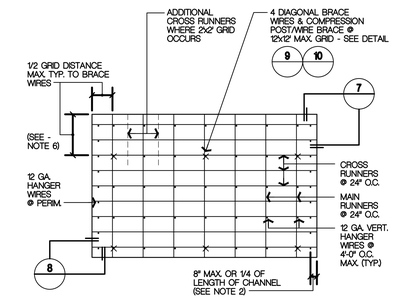

DIAGRAMATIC ACOUSTICAL CEILING SUSPENSION SYSTEM — SCALE: NTS — A902 / 6

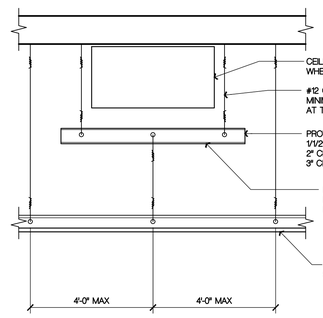

CEILING SUPPORT AT OBSTRUCTION — SCALE: 1/2"=1'-0" — A902 / 11

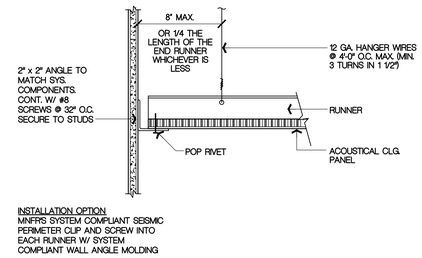

SUSPENDED ACOUSTICAL CEILING FIXED CONDITION AT WALL — SCALE: 3"=1'-0" — A902 / 7

SUSPENDED CEILING NOTES:

1. 12 gauge (8 ga at gyp. bd) hanger wires may be used for up to and including 4'-0" x 4'-0" grid spacing along main runners. Splices will not be permitted in any hanger wires. See 10
2. Provide 12 ga. (8 ga at gyp. bd) hanger wires at the ends of all main and cross runners within 8" from the support or within 1/4 of the length of the end tee, whichever is least, for the perimeter of the ceiling area. End connections for runners which are designed and detailed to resist the applied horizontal forces may be used in lieu of the 12 ga. hanger wires subject to agency review and approval.
3. Provide trapeze or other supplementary support members at obstructions to main hanger spacing. Provide additional hangers, struts or braces as required at all ceiling breaks, soffits or discontinuous areas. Hanger wires that are more than 1 in 6 out of plumb wall shall have counter-sloping wires.
4. Ceiling grid members may be attached to not more than 2 adjacent walls. Ceiling grid members should be at least 1/2 inch free of other walls, if walls run diagonally to ceiling grid system runners, one end of main and cross runners should be free and a minimum of 1/2" clear of wall. See 7
5. At the perimeter of the ceiling area where main or cross runners are not connected to the adjacent wall, provide interconnection between the runners at the free end to prevent lateral spreading. A metal strut or 16 ga. wire with a positive mechanical connection to the runner may be used. Where the perpendicular distance from the wall to the first parallel runner is 12" or less, this interlock is not required. See 8
6. Provide sets of four 12 ga. splayed bracing wires oriented 90 degrees from each other at not more than 12 feet by 12 feet on center. Provide bracing wires at locations not more than 1/2 of the above spacings from each perimeter wall and at the edge of vertical ceiling offsets. The slope of these wires should not exceed 45 degrees from the plane of the ceiling and should be taut without causing the ceiling to lift. Splices in bracing wires are not to be permitted. See 6 9
7. Fasten hanger wires with not less than 3 tight turns. Fasten bracing splay wires with 4 tight turns. Make all tight turns within a distance of 1-1/2 inches. Hanger or bracing wire anchors to the structure should be installed in such a manner that the direction of the wire aligns as closely as possible with the direction of the forces acting on the wire.
8. Separate all ceiling hanging and bracing wires at least 6 inches from all unbraced ducts, pipes, conduit, etc. It is acceptable to attach lightweight items, such as single electrical conduit not exceeding 3/4" nominal diameter, to hanger wires using connectors acceptable to U.B.C.
9. Attach all light fixtures to the ceiling grid runners to resist a horizontal force equal the weight of the fixtures.
10. Flush or recessed light fixtures and air terminals or services weighing less than 56 pounds may be supported directly on the runners of heavy duty grid system but, in addition, they must have a minimum of two 12 ga. slack safety wires attached to the fixture at diagonal corners and anchored to the structure above.

    All flush or recessed light fixtures and air terminals or services weighing 56 pounds or more must be independently supported by not less than 4 taut 12 ga. wires each attached to the fixture and to the structure above regardless of the type of ceiling grid system used.

    The 4 taut 12 ga. wires including their attachment to the structure above must be capable of supporting 4 times the weight of the unit.
11. All fixtures and air terminals or services supported on intermediate duty grid systems must be independently supported by not less than 4 taut 12 ga. wires each attached to the fixture or terminal and to the structure above.
12. Support surface mounted light fixtures by at least two positive devices which surround the ceiling runner and which are each supported from the structure above by a 12 ga. wire. Spring clips or clamps that connect only to the runner are not acceptable. Provide additional supports when light fixtures are 8 feet or longer.
13. Support pendant mounted light fixtures directly from the structure above with hanger wires or cables passing through each pendant hanger and capable of supporting 4 times the weight of the fixture.
14. Lay-in ceiling assemblies in exitways shall be installed with a main runner or cross runner surrounding all sides of each piece of tile board or panel and each light fixture or grill spaces and intersections of such runners shall be attached with through connectors such as pop rivets, screws, pins, plates with bent tabs or by other approved connectors. Expansion joints shall be provided in the ceiling at intersections of corridors and at junctions of corridors and lobbies or other similar areas.
15. Gypboard suspended ceiling systems shall comply with Title 24, CCR, and gypboard ceilings should not support materials or building components other than grills, light fixtures, small electrical conduits, small ducts and the like. All such components should be supported either directly from main runners, or by supplemental framing which is supported by main runners.
16. Suspended acoustical ceiling systems shall comply with 2016 CBC (2015 IBC), ASTM C635, ASTM C636, CISCA (FOR SEISMIC ZONES 3 & 4), AND ASCE 7.05. No vertical loads other than gypboard dead load should be applied to cross-furring.

GENERAL CEILING NOTES:

ALL WORK SHALL COMPLY WITH 2016 CBC (2015 IBC), ASTM C635, ASTM C636, CISCA (FOR SEISMIC ZONES 3 & 4), AND ASCE 7.05 PARTICULAR ATTENTION IS DIRECTED TO INDEPENDANT SUSPENSION OF FIXTURES, DUCTS, DIFFUSERS, GRID INTERSECTIONS, SPLICES, PERIMETER DETAILS AND SEISMIC REQUIREMENTS.

NOTES:
(1). The 2x4 sub-purlins, located in the roof in a typical type tilt-up structure, are not considered to be structural members.
(2). The strut shall be vertical, and shall not hang more than 1 in 6 out-of- plumb.
(3). Struts shall be designed in accordance with chapter 22 Steel, 2016 Edition of the California Building Code (2015 IBC).

PIPE:

ACCEPTABLE STRUT SIZES AND LENGHTS

TRADE SIZE	ALLOWABLE LENGTH	
	EMT	IMC or RMC
1/2"	3'-10"	4'-4"
3/4"	5'-2"	5'-7"
1	6'-6"	7'-0"
1 1/4"	8'-0"	9'-0"
1 1/2"	9'-10"	10'-0"
2"	—	12'-2"

EMT - Electrical Metallic Tubing
IMC - Intermediate Metal Conduit
RMC - Rigid Metal Conduit

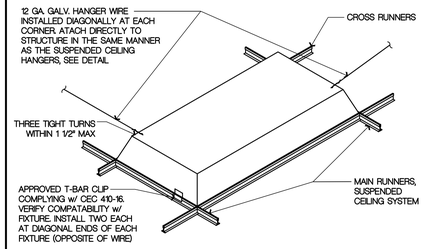

NOTES:
1. FIXTURES IN A FIRE RATED SYSTEM SHALL BE PROTECTED WITH A FIVE SIDED ENCLOSURE, AS DESCRIBED IN THE LISTED ASSEMBLY (NOT SHOWN).
2. RECESSED LIGHT FIXTURES AND AIR TERMINALS, WEIGHING LESS THAN 56 LBS, MAY BE SUPPORTED DIRECTLY ON THE RUNNERS OF A HEAVY DUTY GRID SYSTEM, BUT MUST HAVE A MIN OF TWO 12 GA. SLACK SAFETY WIRES ATTACHED TO THE FIXTURE AT DIAGONAL CORNERS AND ANCHORED TO THE STRUCTURE ABOVE.
3. ALL FIXTURES WEIGHING 56 LBS. OR MORE MUST BE INDEPENDENTLY SUPPORTED BY NOT LESS THAN FOUR TAUT 12 GA. WIRES EACH ATTACHED TO THE STRUCTURE ABOVE. ALL FIXTURES SUPPORTED ON INTERMEDIATED GRID SYSTEMS MUST BE INDEPENDENTLY SUPPORTED AS DESCRIBED ABOVE.

SUSPENDED CEILING FIXTURE SUPPORT — N.T.S. — A902 / 12

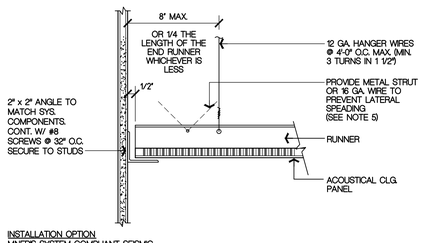

SUSPENDED ACOUSTICAL CEILING SLIP JOINT AT WALL — SCALE: 3"=1'-0" — A902 / 8

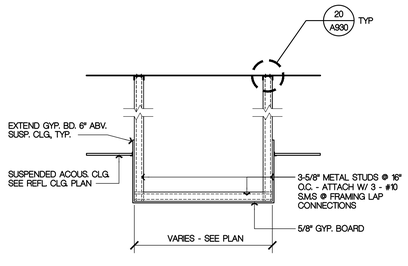

SOFFIT DETAIL — SCALE: 1/2"=1'-0" — A902 / 4

Copyright © 2025
All ideas, designs, arrangements and plans indicated or represented by this drawing are owned by, and the property of, NICHOLS, MELBURG and ROSSETTO and were created, evolved and developed for use on, and in conjunction with, the specified project. None of such ideas, designs, arrangements and plans shall be used by or disclosed to any person, firm or corporation for any purpose whatsoever without the written permission of NICHOLS, MELBURG and ROSSETTO.

NICHOLS MELBURG & ROSSETTO
ARCHITECTS + ENGINEERS
300 KNOLLCREST DRIVE
REDDING, CA. 96002
(530) 222-3300 (530) 222-3538 FAX
http://www.nmrdesign.com

CONSULTANTS

LICENSE STAMPS

LICENSED ARCHITECT — KYLE MATTHEWS — C 27504 — EXP. 10/31/25 — STATE OF CALIFORNIA

PROJECT NAME

TEHAMA COUNTY CORNING VETERAN'S HALL
1620 SOLANO ST.
CORNING, CA

SHEET TITLE

CEILING DETAILS

DRAWING STATUS

CONSTRUCTION DOCUMENTS

REVISIONS

Sym.	Description	Date

Drawn By	KP
Date Issued	2/13/2025
Scale	AS NOTED
Project No.	21-6497

SHEET No.

A902

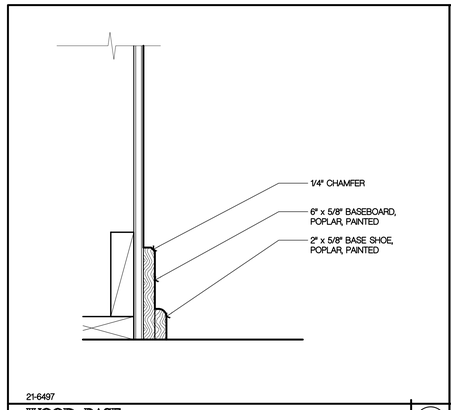

21-6497

WOOD BASE

SCALE: 3" = 1'-0" (9)

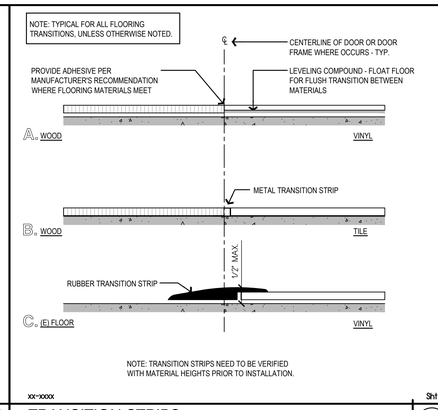

xx-xxxx Sht

TRANSITION STRIPS

SCALE: 12" = 1'-0" (5)

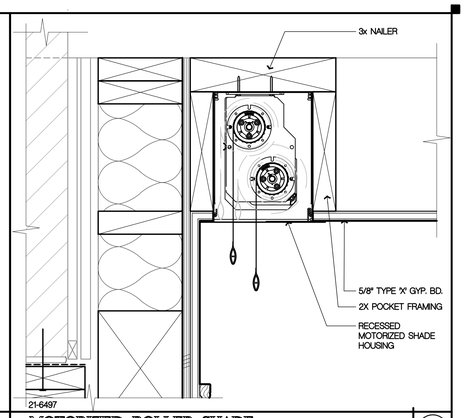

21-6497

MOTORIZED ROLLER SHADE

SCALE: 3" = 1'-0" (1)

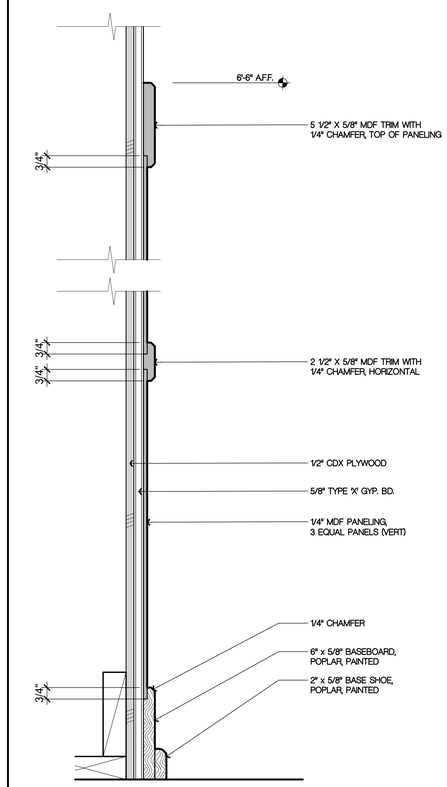

21-6497

WOOD PANELING

SCALE: 3" = 1'-0" (11)

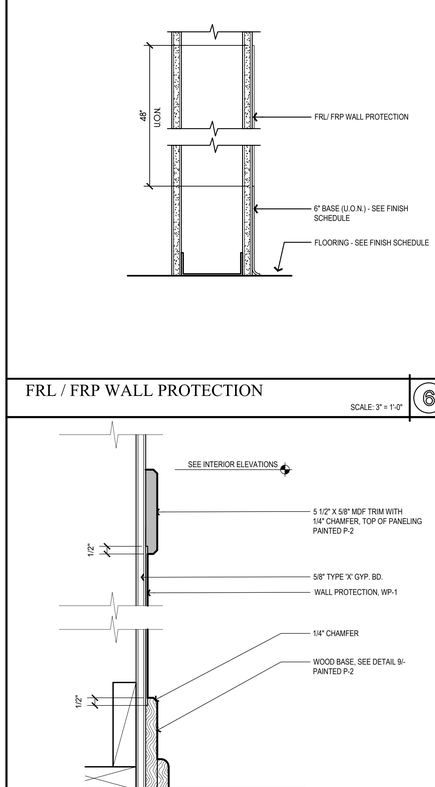

FRL / FRP WALL PROTECTION

SCALE: 3" = 1'-0" (6)

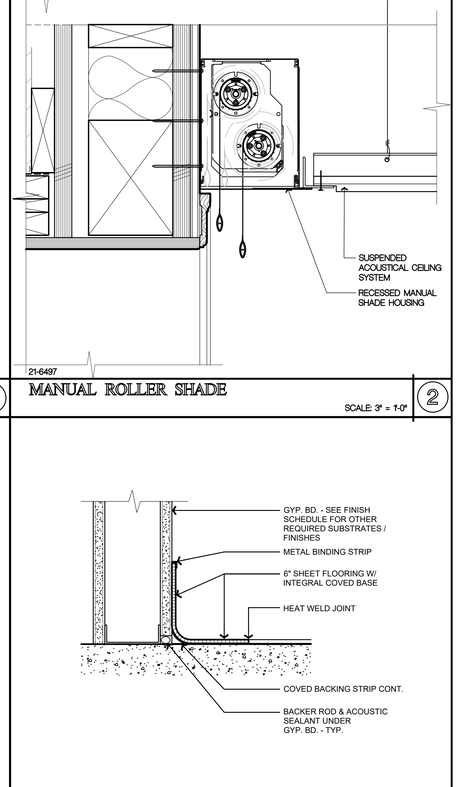

21-6497

MANUAL ROLLER SHADE

SCALE: 3" = 1'-0" (2)

21-6497

WOOD PANELING, TRIM ? VERTICALS

SCALE: 3" = 1'-0" (12)

ACOUSTICAL WALL PANEL

SCALE: 3" = 1'-0" (8)

21-6497

TOP SET AT RESILIENT FLOORING

SCALE: 3" = 1'-0" (4)

Copyright © 2025

All ideas, designs, arrangements and plans indicated or represented by this drawing are owned by, and the property of, NICHOLS, MELBURG and ROSSETTO and were created, evolved and developed for use on, and in conjunction with, the specified project. None of such ideas, designs, arrangements and plans shall be used by, or disclosed to any person, firm or corporation for any purpose whatsoever, without the written permission of NICHOLS, MELBURG and ROSSETTO.

NICHOLS MELBURG & ROSSETTO
ARCHITECTS + ENGINEERS
300 KNOLLCREST DRIVE
REDDING, CA. 96002
(530) 222-3300 (530) 222-3538 FAX
http://www.nmrdesign.com

CONSULTANTS

LICENSE STAMPS

LICENSED ARCHITECT
KYLE MATTHEWS
C 27504
REN. 10/31/25
STATE OF CALIFORNIA

PROJECT NAME

TEHAMA COUNTY
CORNING
VETERAN'S HALL

1620 SOLANO ST.
CORNING, CA

SHEET TITLE

INTERIOR DETAILS

DRAWING STATUS

CONSTRUCTION DOCUMENTS

REVISIONS

Sym.	Description	Date

Drawn By	KP
Date Issued	2/13/2025
Scale	AS NOTED
Project No.	21-6497

SHEET No.

A910

Login Name: KdevP
Plot Date: February 13, 2025 - 9:43 am
File Name: N:\Projects\6000\Job\2021\21-6497 Tehama Co. Corning Vets Hall\Drawings\CKH-HIT DETAIL3.dwg
XREFS: b-CKH_Title Block | Motorized Roller Shade | Manual Roller Shade | Hedgerl Coved Base | Top Set at Resilient Flooring | Wall Protection WP-1 | FRL - FRP Wall Protection | Acoustical Wall Protection AWP-1 | Transition Strips | sa-grnds_bar_wood | Toilet Partition Anchorage_wood | sa-fire-ext | Marlwood_Anchor | Hi recessed toilet paper dsp | overanchorage | ovr-v1 | ovr-v2 | ovr-b1 | ovr-v1 | sa-dg_notes | sa-dg_soffit | sa-dg_attachment | sa-dg_accust | sa-dg_fixed | sa-dg_clip | sa-dg_post-vert | sa-dg_acoustic | dg-support-dr-dnt | sa-dg-f

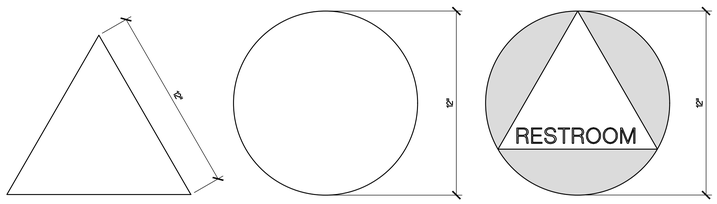

IDENTIFYING SYMBOLS CENTERED ON THE DOOR 58" MIN. - 60" MAX. A.F.F. (CBC 11B-703.7.2.6) IN A COLOR AND 70% MIN. CONTRAST DIFFERENT FROM THE DOOR.

MENS FACILITY DOORS SHALL HAVE AN EQUILATERAL TRIANGLE 1/4" THICK W/ 12" SIDES AND A VERTEX POINTING UPWARDS.

WOMENS FACILITY DOORS SHALL HAVE A 12" CIRCLE 1/4" THICK.

UNISEX FACILITY DOORS SHALL HAVE A 12" DIAMETER CIRCLE 1/4" THICK AND A 1/4" THICK TRIANGLE INSCRIBED AND SUPERIMPOSED ON THE CIRCLE. CIRCLE SHALL BE A COLOR TO CONTRAST BOTH DOOR & TRIANGLE.

AS OF MARCH 1, 2017 - ALL SINGLE USER TOILET FACILITIES IN ANY BUSINESS ESTABLISHMENT, PLACE OF PUBLIC ACCOMMODATION, OR STATE OR LOCAL GOVERNMENT AGENCY SHALL BE IDENTIFIED AS ALL-GENDER FACILITIES BY SIGNAGE THAT COMPLIES WITH TITLE 24 OF THE CALIFORNIA CODE OF REGULATIONS, AND DESIGNATED FOR USE BY NO MORE THAN ONE OCCUPANT AT A TIME OR FOR FAMILY OR ASSISTED USE (HEALTH AND SAFETY CODE SECTION 118503).

A TOILET ROOM DOOR SYMBOLS
3"=1'-0"

PROVIDE RESTROOM SIGNAGE AS REQUIRED ON THE DOOR SCHEDULE.

IN ADDITION TO THE 12" SYMBOLS ON THE RESTROOM DOORS PROVIDE:

SIGNAGE MOUNTED AT +60" TO BASELINE OF HIGHEST RAISED TEXT, ON WALL (SEE NOTE 3)

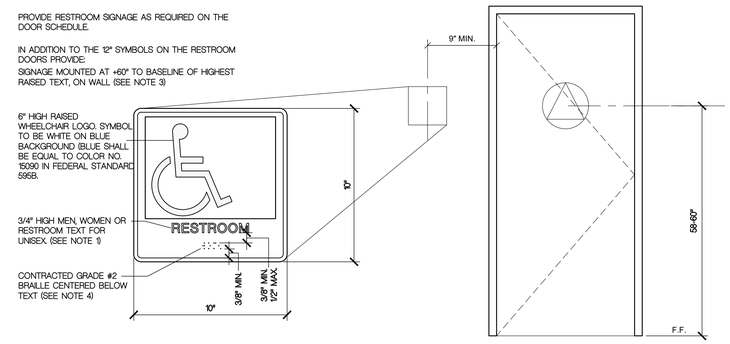

(SHOWN ABOVE)
B ACCESSIBLE TOILET ROOM SIGN
3"=1'-0"

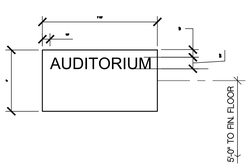

C ROOM IDENTIFICATION SIGN
3"=1'-0"

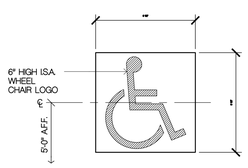

D ACCESSIBLE ENTRANCE IDENTIFICATION
3"=1'-0"
*STICKER AT GLAZING WHEN SIGN OCCURS AT DOOR WITH A SIDELIGHT

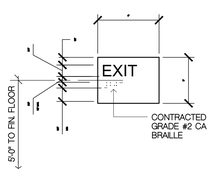

E EXIT SIGN
3"=1'-0"

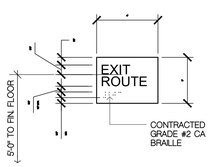

F EXIT ROUTE
3"=1'-0"

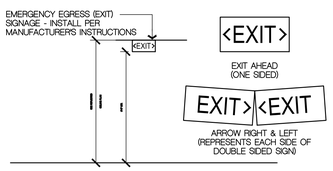

ILLUMINATED EXIT SIGN
1/4" = 1'-0"

SIGNAGE TYPES GENERAL NOTES

1. WHERE VISUAL IDENTIFICATION (SIGNAGE) IS PROVIDED FOR ROOMS OR SPACES, RAISED LETTERS (RAISED 1/32") SHALL BE PROVIDED AND SHALL BE ACCOMPANIED BY BRAILLE IN CONFORMANCE WITH THE FOLLOWING CONTRACTED GRADE 2 BRAILLE SHALL BE USED AND SHALL COMPLY WITH CBC SECTIONS 11B-703.3 AND 11B-703.4.
   - 1.1 BRAILLE DOTS SHALL HAVE A DOMED OR ROUNDED SHAPE, CBC 11B-703.3.1.
   - 1.2. BRAILLE SHALL BE POSITIONED BELOW THE CORRESPONDING TEXT IN A HORIZONTAL FORMAT, FLUSH LEFT OR CENTERED. BRAILLE SHALL BE PLACED BELOW ENTIRE TEXT AND SEPARATED 3/8" MIN. AND 1/2" MAX. FROM ANY OTHER TACTILE CHARACTERS AND 3/8" MIN. FROM RAISED BORDERS AND DECORATIVE ELEMENTS.
   - 1.3. BRAILLE DIMENSIONS PER CBC TABLE 11B-703.3.1:
     - 1.3.1. DOT BASE DIA SHALL BE .059" - .063".
     - 1.3.2. DISTANCE BETWEEN TWO DOTS IN THE SAME CELL SHALL BE .100"
     - 1.3.3. DISTANCE BETWEEN CORRESPONDING DOTS IN ADJACENT CELLS SHALL BE .300"
     - 1.3.4. DOT HEIGHT SHALL BE .025" - .037"
     - 1.3.5. DISTANCE BETWEEN CORRESPONDING DOTS FROM ONE CELL DIRECTLY BELOW SHALL BE .395" TO .400"
2. SIGNS SHALL BE INSTALLED ON THE WALL ADJACENT TO THE LATCH OUTSIDE THE DOOR. WHERE THERE IS NO SPACE ON THE LATCH SIDE, SIGNS SHALL BE PLACED ON THE NEAREST ADJACENT WALL, PREFERABLE ON THE RIGHT.
3. MOUNTING HEIGHT SHALL BE 60" MAX. ABOVE THE FINISH FLOOR TO THE BASELINE OF HIGHEST RAISED CHARACTERS U.N.O. (CBC 11B-703.4.1). SIGNS WITH RAISED TEXT SHALL NOT BE DOOR MOUNTED.
4. OBSTRUCTIONS: A PERSON MUST BE ABLE TO APPROACH WITHIN 3" OF SIGN WITHOUT ENCOUNTERING PROTRUDING OBJECTS OR STANDING (SITTING) WITHIN SWING OF DOOR.
5. ACTUAL SIGN DESIGN AND DIMENSIONS SHALL BE PROVIDED BY CONTRACTOR (OR SUB-CONTRACTOR) IN COORDINATION WITH OWNERS REPRESENTATIVE.
6. SIGNS TO BE A.D.A. / C.B.C. COMPLIANT.
7. SIGN TEXT TO BE CONTRASTING COLOR TO SIGN FIELD.
8. PROVIDE BLANK SIGN ON OPPOSITE SIDE OF GLASS TO COVER SIGN MOUNTING WHEN SIGN IS MOUNTED TO SIDELIGHT OR WINDOW.
9. <u>ILLUMINATED EMERGENCY EGRESS SIGN NOTES:</u>
   - 9.1 INTERNALLY ILLUMINATED EXIT SIGNS SHALL COMPLY WITH 2016 CBC SECTION 1013.5
   - 9.2. EXTERNALLY ILLUMINATED EXIT SIGNS SHALL COMPLY WITH 2016 CBC SECTION 1013.6
   - 9.3. TEXT SHALL BE PLAINLY LEGIBLE LETTERS
   - 9.4. MINIMUM TEXT HEIGHT TO BE 6" MIN. WITH PRINCIPAL STROKE OF 3/4" MIN. AND SPACING BETWEEN LETTERS TO BE 3/8" MIN.
   - 9.5. IF A DIRECTIONAL INDICATOR (ARROW) IS PROVIDED, THE CONSTRUCTION WILL BE AS SUCH THAT THE INDICATOR CAN NOT BE READILY CHANGED
   - 9.6. SIGN TEXT WILL BE IN HIGH CONTRAST WITH THE BACKGROUND PER 2016 CBC SECTION 1013.6.1
   - 9.7. ALL EXIT SIGNS WILL BE ILLUMINATED AT ALL TIMES.
10. SEE ELECTRICAL PLANS FOR ADDITIONAL EMERGENCY EXIT LIGHT INFORMATION AND LOCATION.

Copyright © 2025
All ideas, designs, arrangements and plans indicated or represented by this drawing are owned by, and the property of, NICHOLS, MELBURG and ROSSETTO and were created, evolved and developed for use on, and in conjunction with, the specified project. None of such ideas, designs, arrangements and plans shall be used by or disclosed to any person, firm or corporation for any purpose whatsoever without the written permission of NICHOLS, MELBURG and ROSSETTO.

NICHOLS MELBURG & ROSSETTO
ARCHITECTS + ENGINEERS
300 KNOLLCREST DRIVE
REDDING, CA. 96002
(530) 222-3300 (530) 222-3538 FAX
http://www.nmrdesign.com

CONSULTANTS

LICENSE STAMPS

LICENSED ARCHITECT
KYLE MATTHEWS
C 27504
REN. 10/31/25
STATE OF CALIFORNIA

PROJECT NAME

TEHAMA COUNTY
CORNING
VETERAN'S HALL

1620 SOLANO ST.
CORNING, CA

SHEET TITLE

SIGNAGE DETAILS

DRAWING STATUS

CONSTRUCTION DOCUMENTS

REVISIONS

Sym.	Description	Date

Drawn By	KP
Date Issued	2/13/2025
Scale	AS NOTED
Project No.	21-6497

SHEET No.

A960

Login Name: KenerP
Plot Date: February 13, 2025 - 9:44 am
File Name: K:\Projects\6000\Acad\2021\21-6497 Tehama Co. Corning Vets Hall\Drawings\CVH-SIGNAGE DETAILS.dwg
PSNTYPE: 3-CVH-L-Title Block

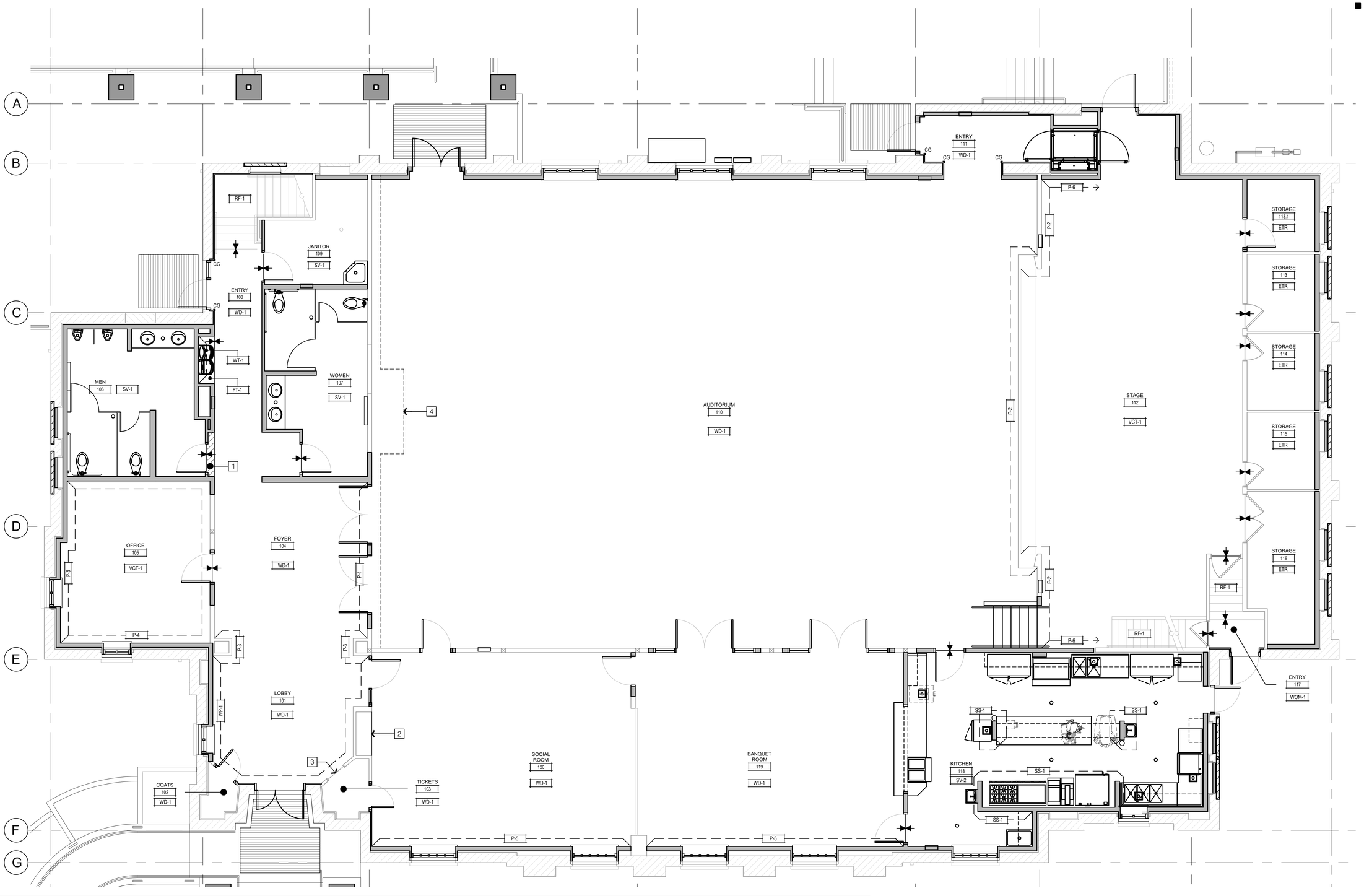

GENERAL FINISH NOTES

1. NO SUBSTITUTIONS WILL BE PERMITTED WITHOUT WRITTEN APPROVAL FROM ARCHITECT / DESIGNER.
2. RESILIENT WALL BASE SHALL BE ROLL GOODS IN THE SPECIFIED HEIGHT AND PROFILE.
3. THIS SHEET TO BE USED IN CONJUNCTION WITH THE FINISH SCHEDULE, FURNISHINGS MANUAL, AND PROJECT MANUAL.
4. CONTRACTOR SHALL PROVIDE ATTIC STOCK TO OWNER IN INCREMENTS INDICATED IN PROJECT MANUAL.
5. FOR ALL PRODUCTS INSTALLED, NOTE INDUSTRY STANDARDS AND MANUFACTURER SPECIFICATIONS FOR INSTALLATION.
6. DO NOT PAINT ANY FACTORY FINISHED ITEMS.
7. MISCELLANEOUS METAL, I.E. RETURN AND AIR SUPPLY, GRILLES, EXPANSION JOINTS, ETC. SHALL BE PAINTED TO MATCH THE ADJACENT WALL SURFACE.
8. ALL INTERIOR FINISHES SHALL MEET CLASS A FLAME SPREAD RATING OF 25 OR LESS AND SHALL HAVE A SMOKE DEVELOPMENT OF 250 OR LESS.
9. ALL FLOOR REDUCER / THRESHOLDS SHALL BE LOCATED AT THE CENTER OF DOOR WHEN IN CLOSED POSITION AND MEET ACCESSIBILITY REQUIREMENTS. REFER TO SHEET AE571.00 FOR DETAILS.
10. ALL INTERIOR FLOORING SHALL MEET CLASS I AND CLASS II.
11. CAULK ALL DOORS, FRAMES AND MILLWORK. COLOR TO MATCH ADJACENT SURFACE.
12. ALL SURFACES TO BE PAINTED SHALL RECEIVE TWO COATS. PREP SURFACE PER PAINT MANUFACTURER'S RECOMMENDATIONS. ALL METAL TRIM AND SASH SHALL RECEIVE TWO COATS OF PAINT OVER MANUFACTURER RECOMMENDED PRIMER COAT. ALL APPLICATIONS SHALL USE MANUFACTURER RECOMMENDED EXTENDER AGENTS IN ORDER TO REDUCE BRUSH MARKS.
13. ALL COLORS SHALL BE AS PER THE FINISH SCHEDULE UNLESS WRITTEN APPROVAL FROM THE ARCHITECT/ DESIGNER.
14. THE WORD "CLEAR" INDICATES CRITICAL DIMENSIONS FOR ACCESSIBILITY EQUIPMENT OR FUNCTIONAL CLEARANCES FROM FACE OF FINISH TO FACE OF FINISH.
15. THRESHOLDS AT DOORWAYS AND TRANSITION STRIPS SHALL NOT EXCEED 1/2" IN HEIGHT. RAISED THRESHOLDS AND FLOOR LEVEL CHANGES AT ACCESSIBLE DOORWAYS SHALL BE BEVELED WITH A SLOPE NO GREATER THAN 1:2.
16. TURN OVER EXISTING FURNITURE TO OWNER IN AREAS WHERE FURNITURE IS REPLACED WITH NEW.
17. ARROWS ON FLOOR PATTERN PLANS INDICATE DIRECTION OF LONG SIDE FLOORING PRODUCTS.
18. FRAME OF DOOR LITE SHALL BE PAINTED TO MATCH ADJACENT DOOR FINISH.
19. GROUT JOINT FROM FLOOR TILE TO WALL TILE TO ALIGN WHERE POSSIBLE.

LEGEND

- FINISH — FINISH TAG
- DIRECTION OF FINISH MATERIAL
- FINISH TRANSITION. SEE DETAIL 5/A910.
- FINISH — LOCATION OF ACCENT PAINT

KEYNOTES

1. NEW WOOD FLOOR TO MATCH ADJACENT EXISTING.
2. PAINT (E) BUILT-IN BOOKCASE, P-2 TO MATCH ADJACENT DOOR FRAMES.
3. PAINT (E) FRAME AND DOORS, PAINT P-2.
4. (E) CORBELS TO BE PAINTED, P-1.

FIRST FLOOR - FINISH FLOOR PLAN

SCALE: 1/4" = 1'-0"

Copyright © 2025

All ideas, designs, arrangements and plans indicated or represented by this drawing are owned by, and the property of, NICHOLS, MELBURG and ROSSETTO, and were created, evolved and developed for use in conjunction with, the specified project. None of such ideas, designs, arrangements or plans shall be used by, or disclosed to any person, firm or corporation for any purpose whatsoever without the written permission of NICHOLS, MELBURG and ROSSETTO.

NICHOLS MELBURG & ROSSETTO
ARCHITECTS + ENGINEERS
300 KNOLLCREST DRIVE
REDDING, CA. 96002
(530) 222-3300 (530) 222-3538 FAX
http://www.nmrdesign.com

CONSULTANTS

LICENSE STAMPS

PROJECT NAME

TEHAMA COUNTY
CORNING
VETERAN'S HALL

1620 SOLANO ST.
CORNING, CA

SHEET TITLE

FIRST FLOOR - FINISH FLOOR PLAN

DRAWING STATUS

CONSTRUCTION DOCUMENTS

REVISIONS

Sym.	Description	Date

Drawn By	NGG/KP
Date Issued	2/13/2025
Scale	1/4" = 1'-0"
Project No.	21-6497

SHEET No.

ID201

Login Name: NatalieG
Plot Date: February 13, 2025 - 9:09 am
File Name: N:\Projects\6000\Cad\22\21-6497 Tehama Co. Corning Vets Hall\Drawings\Civil - ID201 Finish Floor Plan.dwg
XREFS: x-CIVIL_Title Block; x-Floor Plan; x-CIVI-R2; x-CIVI-R01; x-CIVI-GRID

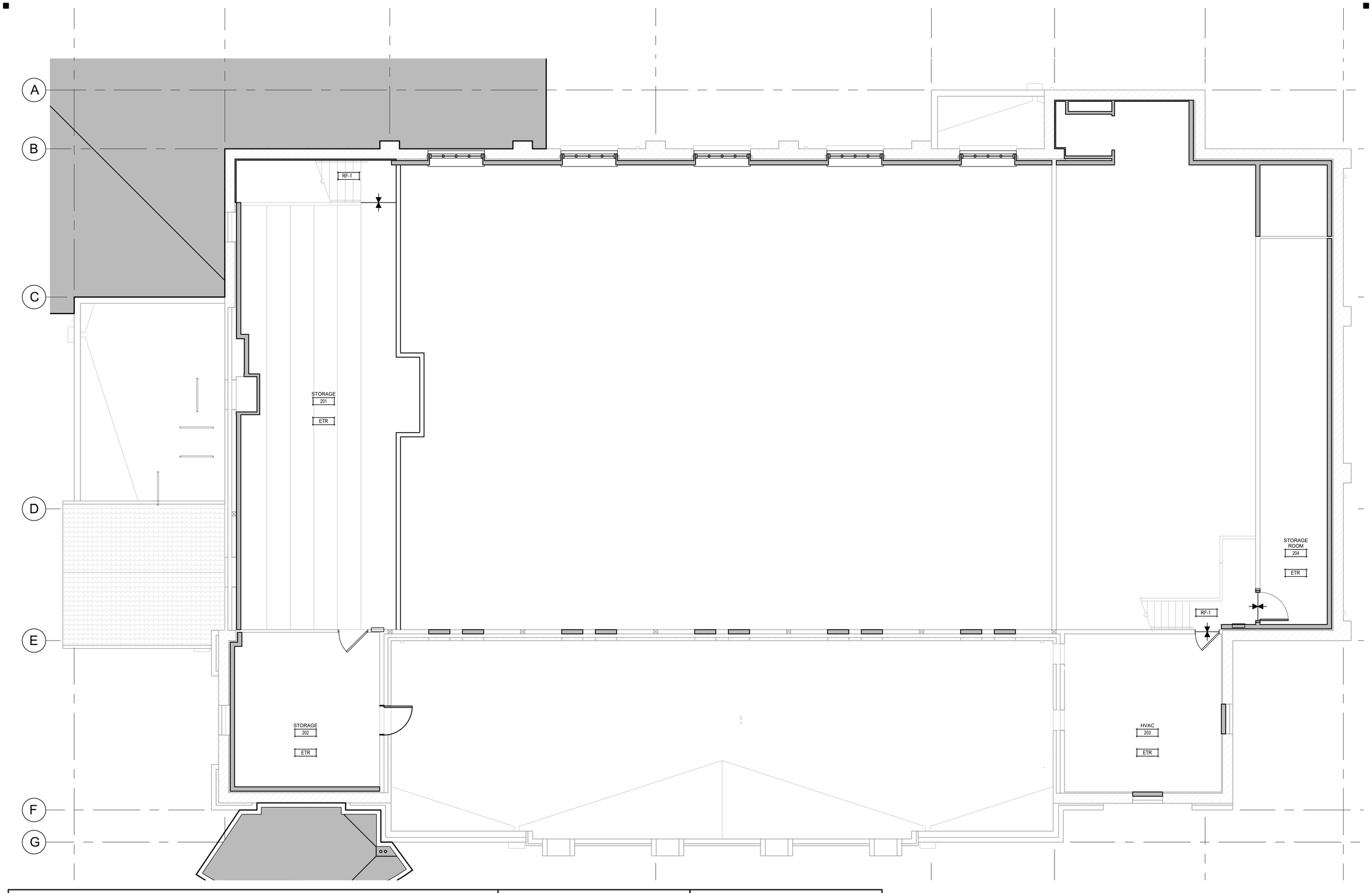

GENERAL FINISH NOTES

1. NO SUBSTITUTIONS WILL BE PERMITTED WITHOUT WRITTEN APPROVAL FROM ARCHITECT / DESIGNER.
2. RESILIENT WALL BASE SHALL BE ROLL GOODS IN THE SPECIFIED HEIGHT AND PROFILE.
3. THIS SHEET TO BE USED IN CONJUNCTION WITH THE FINISH SCHEDULE, FURNISHINGS MANUAL, AND PROJECT MANUAL.
4. CONTRACTOR SHALL PROVIDE ATTIC STOCK TO OWNER IN INCREMENTS INDICATED IN PROJECT MANUAL.
5. FOR ALL PRODUCTS INSTALLED, NOTE INDUSTRY STANDARDS AND MANUFACTURER SPECIFICATIONS FOR INSTALLATION.
6. DO NOT PAINT ANY FACTORY FINISHED ITEMS.
7. MISCELLANEOUS METAL, I.E. RETURN AND AIR SUPPLY, GRILLES, EXPANSION JOINTS, ETC. SHALL BE PAINTED TO MATCH THE ADJACENT WALL SURFACE.
8. ALL INTERIOR FINISHES SHALL MEET CLASS A FLAME SPREAD RATING OF 25 OR LESS AND SHALL HAVE A SMOKE DEVELOPMENT OF 250 OR LESS.
9. ALL FLOOR REDUCER / THRESHOLDS SHALL BE LOCATED AT THE CENTER OF DOOR WHEN IN CLOSED POSITION AND MEET ACCESSIBILITY REQUIREMENTS. REFER TO SHEET AE571.00 FOR DETAILS.
10. ALL INTERIOR FLOORING SHALL MEET CLASS I AND CLASS II.
11. CAULK ALL DOORS, FRAMES AND MILLWORK. COLOR TO MATCH ADJACENT SURFACE.
12. ALL SURFACES TO BE PAINTED SHALL RECEIVE TWO COATS. PREP SURFACE PER PAINT MANUFACTURER'S RECOMMENDATIONS. ALL METAL TRIM AND SASH SHALL RECEIVE TWO COATS OF PAINT OVER MANUFACTURER RECOMMENDED PRIMER COAT. ALL APPLICATIONS SHALL USE MANUFACTURER RECOMMENDED EXTENDER AGENTS IN ORDER TO REDUCE BRUSH MARKS.
13. ALL COLORS SHALL BE AS PER THE FINISH SCHEDULE UNLESS WRITTEN APPROVAL FROM THE ARCHITECT/ DESIGNER.
14. THE WORD "CLEAR" INDICATES CRITICAL DIMENSIONS FOR ACCESSIBILITY EQUIPMENT OR FUNCTIONAL CLEARANCES FROM FACE OF FINISH TO FACE OF FINISH.
15. THRESHOLDS AT DOORWAYS AND TRANSITION STRIPS SHALL NOT EXCEED 1/2" IN HEIGHT. RAISED THRESHOLDS AND FLOOR LEVEL CHANGES AT ACCESSIBLE DOORWAYS SHALL BE BEVELED WITH A SLOPE NO GREATER THAN 1:2.
16. TURN OVER EXISTING FURNITURE TO OWNER IN AREAS WHERE FURNITURE IS REPLACED WITH NEW.
17. ARROWS ON FLOOR PATTERN PLANS INDICATE DIRECTION OF LONG SIDE FLOORING PRODUCTS.
18. FRAME OF DOOR LITE SHALL BE PAINTED TO MATCH ADJACENT DOOR FINISH.
19. GROUT JOINT FROM FLOOR TILE TO WALL TILE TO ALIGN WHERE POSSIBLE.

LEGEND

- FINISH — FINISH TAG
- DIRECTION OF FINISH MATERIAL
- FINISH TRANSITION
- FINISH — LOCATION OF ACCENT PAINT

KEYNOTES

SECOND FLOOR - FINISH FLOOR PLAN

SCALE: 1/4" = 1'-0"

Copyright © 2025

All ideas, designs, arrangements and plans indicated or represented by this drawing are owned by, and the property of, NICHOLS, MELBURG and ROSSETTO, and were created, evolved and developed for use in conjunction with, the specified project. None of such ideas, designs, arrangements or plans shall be used by, or disclosed to any person, firm or corporation for any purpose whatsoever without the written permission of NICHOLS, MELBURG and ROSSETTO.

NICHOLS MELBURG & ROSSETTO
ARCHITECTS + ENGINEERS
300 KNOLLCREST DRIVE
REDDING, CA. 96002
(530) 222-3300 (530) 222-3538 FAX
http://www.nmrdesign.com

CONSULTANTS

LICENSE STAMPS

PROJECT NAME

TEHAMA COUNTY
CORNING
VETERAN'S HALL

1620 SOLANO ST.
CORNING, CA

SHEET TITLE

SECOND FLOOR - FINISH FLOOR PLAN

DRAWING STATUS

CONSTRUCTION DOCUMENTS

REVISIONS

Sym.	Description	Date

Drawn By	NGG/KP
Date Issued	2/13/2025
Scale	1/4" = 1'-0"
Project No.	21-6497

SHEET No.

ID202

Login Name: NatalieG
PC Date: Thursday 13, 2025 - 9:11 am
File Name: N:\Projects\6000Series\6200\21-6497 Tehama Co. Corning Vets Hall\Drawings\CXH - ID202 Finish Floor Plan.dwg
PRESS: xCVH_Title Block: I:xCVH-H21:xCVH-GRID

ABBREVIATIONS

A.B.	ANCHOR BOLTS
ABT.	ABOUT
ADDL.	ADDITIONAL
ADJ.	ADJACENT
AGGR.	AGGREGATE
ANC.	ANCHOR
APPROX.	APPROXIMATE
APVD.	APPROVED
ARCH.	ARCHITECT
ASPH.	ASPHALT
BD.	BOARD
BLDG.	BUILDING
BLK.	BLOCK
BLK'G.	BLOCKING
BM.	BEAM
B.N.	BOUNDARY NAIL
BOT.	BOTTOM
B.O.	BOTTOM OF
BRN'G.	BEARING
BTWN.	BETWEEN
CANTIL.	CANTILEVER
CBC	CALIFORNIA BUILDING CODE
C.J.	CONTROL JOINT
CLG.	CEILING
CL.	CENTERLINE
CLR.	CLEAR
CMU	CONCRETE MASONRY UNIT
COL.	COLUMN
CONC.	CONCRETE
CONN.	CONNECTION
CONST.	CONSTRUCTION
CONT.	CONTINUOUS
CSK.	COUNTERSINK
D	DEAD LOAD
DBL.	DOUBLE
DET.	DETAIL
D.F.L.	DOUGLAS FIR, LARCH
DIA.	DIAMETER
DIAG.	DIAGONAL
DIM.	DIMENSION
DML.	DEMOLISH, DEMOLITION
DO.	REPEAT
DP.	DEEP
DWG.	DRAWING
DSA	DIVISION OF THE STATE ARCHITECT
(E)	EXISTING
EA.	EACH
E.F.	EACH FACE
ELEV.	ELEVATION OR ELEVATOR
EMBED.	EMBEDMENT
E.N.	END NAIL OR EDGE NAIL
ENG.	ENGINEER
E.W.	EACH WAY
EXT.	EXTERIOR
FDN.	FOUNDATION
F.F.	FINISH FLOOR
F.G.	FINISH GRADE
FLR.	FLOOR
F.N.	FIELD NAIL
F.O.C.	FACE OF CONCRETE
F.O.M.	FACE OF MASONRY
F.O.S.	FACE OF STUD
FRM'G.	FRAMING
FT.	FOOT
FTG.	FOOTING
FURR.	FURRING

GA.	GAGE
GALV.	GALVANIZED
G/L	GLU-LAMINATED
G/N	GANG-NAIL
GYP.	GYPSUM
HCAI	CALIFORNIA DEPARTMENT OF HEALTH CARE ACCESS AND INFORMATION
HD.	HOLDDOWN
HDR.	HEADER
HORIZ.	HORIZONTAL
HSA	HEADED STUD ANCHOR
H.S.B.	HIGH STRENGTH BOLTS
HSS	HOLLOW STRUCTURAL SECTION
HT.	HEIGHT
I.D.	INSIDE DIAMETER
I.F.	INSIDE FACE
IN.	INCH
INT.	INTERIOR
JST.	JOIST
JT.	JOINT
K	KIP, KILO-POUND
L	ANGLE
LB	POUND
LL	FLOOR LIVE LOAD
Lr	ROOF LIVE LOAD
L.L.H.	LONG LEG HORIZONTAL
L.L.V.	LONG LEG VERTICAL
LOCS.	LOCATIONS
LONGL.	LONGITUDINAL
LT.WT.	LIGHT WEIGHT
LSL	LAMINATED STRAND LUMBER
LVL	LAMINATED VENEER LUMBER
MACH.	MACHINE
MAT'L.	MATERIAL
MAX.	MAXIMUM
M.B.	MACHINE BOLT
MECH.	MECHANICAL
MEZZ.	MEZZANINE
MFR.	MANUFACTURER
MIN.	MINIMUM
MISC.	MISCELLANEOUS
M.I.W.	MALLEABLE IRON WASHER
MTL.	METAL
(N)	NEW
NO.	NUMBER
NOM.	NOMINAL
N.S.A.	NELSON STUD ANCHOR
N.T.S.	NOT TO SCALE
O/	OVER
O.C.	ON CENTER
O.D.	OUTSIDE DIAMETER
O.F.	OUTSIDE FACE
O.H.	OPPOSITE HAND
OPN'G.	OPENING
OPP.	OPPOSITE
ORIG.	ORIGINAL
O.S.B.	ORIENTED STRAND LUMBER
O.W.G.	OPEN WEB GIRDER
O.W.J.	OPEN WEB JOIST
O.W.T.	OPEN WEB TRUSS
P.A.F.	POWDER ACTUATED FASTENER
PEN.	PENETRATION
PERP.	PERPENDICULAR

PLC'S.	PLACES
PLY.	PLYWOOD
PL.	PLATE
P.M.D.	PLY-METAL DRILLERS
PREFAB.	PRE-FABRICATED
PARA.	PARALLEL
PSF	POUNDS PER SQUARE FOOT
PSI	POUNDS PER SQUARE INCH
PSL	PARALLEL STRAND LUMBER
P/T	POST TENSIONING
P.T.D.F.	PRESSURE TREATED DOUGLAS FIR
RAD, R.	RADIUS
REF.	REFERENCE, REFER TO
REINF.	REINFORCING
REBAR	REINFORCING STEEL BAR
REQ'D.	REQUIRED
REV.	REVISED, REVISION
RF	ROOF
R.H.W.S.	ROUND HEAD WOOD SCREWS
RM.	ROOM
RS	ROUGH SAWN
S	SNOW LOAD
S.A.D.	SEE ARCHITECTURAL DRAWING
SCHED.	SCHEDULE
SDS	SIMPSON 'STRONG DRIVE SCREW'
SECT.	SECTION
SHT.	SHEET
SHT'G.	SHEATHING
SIM.	SIMILAR
S.O.G.	SLAB ON GRADE
SPEC.	SPECIFICATION
SQ.	SQUARE
STD.	STANDARD
STIFF.	STIFFENER
STL.	STEEL
STRUCT.	STRUCTURAL
S.T.S.	SELF-TAPPING SCREW
S.W.	SHEAR WALL
SYM.	SYMMETRICAL
T.&B.	TOP & BOTTOM
T.&G.	TONGUE & GROOVE
THK.	THICK
T.N.	TOE NAIL
T.O.F.	TOP OF FOOTING
T.O.PL.	TOP OF PLATE
T.O.S.	TOP OF SLAB
T.O.SHTG.	TOP OF SHEATHING
T.O.STL.	TOP OF STEEL
TRANS.	TRANSVERSE
TS	TUBE STEEL, SEE 'HSS'
TYP.	TYPICAL
U.O.N.	UNLESS OTHERWISE NOTED
VERT.	VERTICAL
W.P.	WORK POINT
W/	WITH
W/O	WITHOUT
W, WF	WIDE FLANGE STEEL SECTION
W.W.F.	WELDED WIRE FABRIC
&	AND
@	AT
X	BY
=	EQUALS
#	POUNDS, NUMBER

NAILING SCHEDULE: TABLE 2304.10.2

CONNECTION	NAILING
1. BLOCKING BETWEEN CEILING JOISTS, RAFTERS OR TRUSSES TO TOP PLATE OR OTHER FRAMING BELOW, TOENAIL	3- 8d
BLOCKING BETWEEN RAFTERS OR TRUSS NOT AT THE WALL TOP PLATE TO RAFTER OR TRUSS, TOENAIL	2- 8d
FLAT BLOCKING TO TRUSS AND WEB FILLER, FACE NAIL	10d @ 6" O.C.
2. CEILING JOISTS TO PLATE, TOENAIL	3- 8d
3. CEILING JOISTS, LAPS OVER PARTITIONS, FACE NAIL	3- 16d
4. CEILING JOISTS TO PARALLEL RAFTERS, FACE NAIL	TABLE 2308.7.3.1
5. COLLAR TIE TO RAFTERS, FACE NAIL	3- 10d
6. RAFTERS OR TRUSS TO PLATE, TOE NAIL	3- 10d
7. ROOF RAFTERS TO RIDGE VALLEY OR HIP RAFTERS, TOE NAIL	3- 10d
8. STUD TO STUD, FACE NAIL	10d @ 6" O.C.
9. STUD TO STUD AND ABUTTING STUDS AT INTERSECTING WALL CORNERS, FACE NAIL	16d @ 16" O.C.
10. BUILT-UP HEADER, FACE NAIL	16d @ 16" O.C.
11. CONTINUOUS HEADER TO STUD, TOE NAIL	4- 8d
12. TOP PLATE TO TOP PLATE, FACE NAIL	16d @ 16" O.C.
13. TOP PLATE TO TOP PLATE, AT END JOINTS	8- 16d EA. SIDE OF SPLICE, U.O.N.
14. SILL PLATE TO JOIST, RIM JOIST, BAND JOIST OR BLOCKING, FACE NAIL	16d @ 16" O.C.
15. SILL PLATE TO JOIST, RIM JOIST, BAND JOIST OR BLOCKING AT BRACED WALL PANEL, FACE NAIL	2- 16d @ 16" O.C.
16. STUD TO TOP OR SILL PLATE	4- 8d, TOENAIL OR 2- 16d, END NAIL @ 2X PL. 2- 40d, END NAIL @ 3X PL.
17. TOP OR SILL PLATE TO STUD	2- 16d, END NAIL @ 2X PL. 2- 40d, END NAIL @ 3X PL.
18. TOP PLATES, LAPS & INTERSECTIONS, FACE NAIL	2- 16d
19. 1" BRACE TO EACH STUD & PLATE, FACE NAIL	2- 8d
20. 1" X 6" SHEATHING TO EACH BEARING, FACE NAIL	2- 8d
21. 1" X 8" AND WIDER SHEATHING TO EACH BEARING, FACE NAIL	3- 8d
22. JOIST TO SILL, TOP PLATE OR GIRDER, TOE NAIL	3- 8d
23. RIM JOIST, BAND JOIST OR BLOCKING TO TOP PLATE, SILL OR OTHER FRAMING BELOW, TOE NAIL	8d @ 6" O.C.
24. 1" X 6" SUBFLOOR OR LESS TO EACH JOIST, FACE NAIL	2- 8d
25. 2" SUBFLOOR TO JOIST OR GIRDER, FACE NAIL	2- 16d
26. 2" PLANKS (PLANK & BEAM - FLOOR & ROOF), EA. BEARING, FACE NAIL	2- 16d
27. BUILT-UP GIRDERS AND BEAMS, 2" LUMBER LAYERS, FACE NAIL	10d @ 24" O.C. AT TOP & BOT. STAGGERED ON OPPOSITE SIDES
28. LEDGER STRIP SUPPORTING JOISTS OR RAFTERS, EA. JOIST OR RAFTER, FACE NAIL	3- 16d
29. JOIST TO BAND JOIST OR RIM JOIST, END NAIL	3- 16d
30. BRIDGING OR BLOCKING TO JOIST, RAFTER OR TRUSS, EA. END, TOE NAIL	2- 8d

ALL NAILS SHALL CONFORM TO GENERAL NOTE 6.1.4, U.O.N.

Login Name: LeonardF
Plot Date: February 13, 2025 - 11:42 am
File Name: S:\Swork\21 Projects\21-6497 Tehama Co Corning Vets Hall\02 DRWGS\21-6497 S110 SNOT.dwg
XREFS: X-TITL

GENERAL NOTES

1. GENERAL:

1.1 ALL PHASES OF THE WORK SHALL CONFORM TO THE MINIMUM STANDARDS OF THE 2022 EDITION OF TITLE 24, PART 2, CALIFORNIA BUILDING CODE.

1.2 THE CONTRACTOR SHALL VERIFY ALL DIMENSIONS, ELEVATIONS, AND EXISTING CONDITIONS AT THE JOB SITE PRIOR TO STARTING CONSTRUCTION. ANY DISCREPANCIES OR INCONSISTENCIES FOUND SHALL BE BROUGHT TO THE ARCHITECT'S ATTENTION BEFORE WORK PROCEEDS.

1.3 THE CONTRACT DRAWINGS AND SPECIFICATIONS REPRESENT THE FINISHED STRUCTURE UNLESS OTHERWISE INDICATED, THEY DO NOT SPECIFY METHODS OF CONSTRUCTION. THE CONTRACTOR SHALL TAKE ALL NECESSARY STEPS AND PRECAUTIONS TO MAINTAIN THE STABILITY OF THE STRUCTURE AND PROTECT WORKMEN AND OTHER PERSONS DURING CONSTRUCTION. SPECIFIC ITEMS TO BE CONSIDERED SHALL INCLUDE, BUT NOT BE LIMITED TO, THE ADEQUACY OF ALL FORMS, SCAFFOLDING, AND SHORING FOR CONSTRUCTION EQUIPMENT SHORING OF RETAINING WALLS, AND TEMPORARY LATERAL BRACING OF THE STRUCTURE.

1.4 OPENINGS, POCKETS, SUBSTANTIAL EMBEDDED ITEMS, ETC., SHALL NOT BE PLACED IN SLABS, COLUMNS BEAMS, OR OTHER STRUCTURAL MEMBERS UNLESS SPECIFICALLY DETAILED ON THE STRUCTURAL DRAWINGS.

1.5 ASTM SPECIFICATIONS AND IBC STANDARDS REFERENCED IN THESE DRAWINGS SHALL BE AS LISTED IN 2022 CBC CHAPTER 35.

1.6 IF CERTAIN MINOR DETAILS OF CONSTRUCTION ARE NOT FULLY DESCRIBED ON THE DRAWINGS OR CALLED FOR IN NOTES OR SPECIFICATIONS, THEIR CONSTRUCTION SHALL RESEMBLE SIMILAR CONDITIONS THAT ARE FULLY SHOWN AND SHALL BE REVIEWED BY THE ARCHITECT.

1.7 THE DESIGN OF THIS STRUCTURE ARE BASED ON THE FOLLOWING LOAD CRITERIA AS PRESCRIBED IN CBC CHAPTER 16:

FLOOR LOADS:

MEZZANINE
UNIFORM DEAD LOAD OF 16 PSF WITHOUT STL. FRM'G. (INCLUDED IN DESIGN)
UNIFORM LIVE LOAD OF 40 PSF
REDUCTIONS ARE BASED ON SECTION 1607.12 OF THE CBC

DRESSING ROOM BEHIND STAGE
UNIFORM DEAD LOAD OF 20 PSF WITHOUT STL. FRM'G. (INCLUDED IN DESIGN)
UNIFORM LIVE LOAD OF 150 PSF
REDUCTIONS ARE BASED ON SECTION 1607.12 OF THE CBC

ROOF LOADS:
UNIFORM DEAD LOAD OF 23 PSF AT MAIN BUILDING HIGH ROOF (EXCLUDES SELF WEIGHT OF TRUSSES)
UNIFORM DEAD LOAD OF 20 PSF AT MAIN BUILDING LOW ROOF
UNIFORM DEAD LOAD OF 23 PSF AT MAIN BUILDING TOWER ROOF (EXCLUDES SELF WEIGHT OF TRUSSES)
UNIFORM DEAD LOAD OF 18 PSF AT MAIN ENTRY ROOF ((EXCLUDES HSS SELF WEIGHT))
UNIFORM DEAD LOAD OF 20 PSF AT BACK ENTRY ROOF (EXCLUDES HSS SELF WEIGHT)
UNIFORM LIVE LOAD OF 20 PSF
REDUCTIONS ARE BASED ON SECTION 1607.14 OF THE CBC

WIND DESIGN CRITERIA:
WIND DESIGN METHOD = DIRECTIONAL PROCEDURE
3 SECOND GUST = 100 MPH, EXPOSURE C, RISK CATEGORY III

SEISMIC DESIGN CRITERIA:
RISK CATEGORY III, SITE CLASS D, DESIGN CATEGORY D, I = 1.25, Ip = 1.5, S_S = 0.796, S_1 = 0.357, S_{DS} = 0.637, S_{D1} = 0.476

FRONT AND BACK ENTRY ADDITIONS
SEISMIC FORCE RESISTING SYSTEM = STEEL SPECIAL CANTILEVER COLUMN SYSTEMS
R = 2.5, Ω_0 = 1.25, C_d = 2.5, BASE SHEAR COEFF. = 0.32
ANALYSIS PROCEDURE = EQUIVALENT LATERAL FORCE

1.8 MISCELLANEOUS: NON-SHRINK GROUT: A NON-METALLIC GROUT MEETING THE ARMY CORPS OF ENGINEERS SPECIFICATION CRD-C621, WITH NO SHRINKAGE AFTER PLACEMENT OR EXPANSION AFTER SET, TESTED IN ACCORDANCE WITH ASTM C827, MINIMUM ULTIMATE COMPRESSIVE STRENGTH OF 3000 PSI AFTER 24 HOURS AND 5000 PSI AT 28 DAYS. ACCEPTABLE PRODUCTS INCLUDE:
A. SURE-GRIP NON-FERROUS, NON-SHRINK GROUT BY DAYTON SUPERIOR, MIAMISBURG, OH.
B. MASTERFLOW 928 GROUT BY MASTER BUILDERS, SHAKOPEE, MN.
C. EUCO NS GROUT BY THE EUCLID CHEMICAL COMPANY, CLEVELAND, OHIO.

1.9 PRODUCTS USED IN PROJECT ARE BASED ON THE FOLLOWING REPORTS:

REPORT NAME	REPORT NO.	REPORT DATE
ASC STEEL ROOF DECK	ER-0161	06/06/2022

2. FOUNDATION:

2.1 FOUNDATION DESIGN BASED ON THE BEARING CAPACITIES LISTED IN TABLE 1806.2 OF THE 2022 CBC:

VERTICAL ALLOWABLE BEARING PRESSURE: q_{all} = 2000 PSF.

LATERAL BEARING PRESURE: p_{active} = 150 PSF PER FOOT OF DEPTH BELOW ADJACENT SOIL SURFACE.

LATERAL SLIDING RESISTANCE: COEFFICIENT OF FRICTION = 0.25

FOUNDATIONS SHALL BE EMBEDDED A MINIMUM OF 12 INCHES BELOW ADJACENT FINISHED GRADE OR BUILDING PAD SUBGRADE, WHICHEVER IS LOWER.

3.1 CONCRETE:

3.1.1 PORTLAND CEMENT SHALL CONFORM TO ASTM C150-04, TYPE II OR II-LOW ALKALI. AGGREGATES SHALL CONFORM TO ASTM C33 PER THE CALIFORNIA BUILDING CODE. MAXIMUM AGGREGATE SIZE FOR FOOTINGS AND MASS CONCRETE SHALL NOT EXCEED 1-1/2". MAXIMUM AGGREGATE SIZE FOR ALL OTHER CONCRETE SHALL NOT EXCEED 1".

3.1.2 CONCRETE EXPOSED TO FREEZING AND THAWING CONDITIONS SHALL INCLUDE AIR ENTRAINMENT BASED ON ACI 318 SECTION 19.3.3.1.

3.1.3 CONCRETE MIXES SHALL BE DESIGNED BY A RECOGNIZED TESTING LABORATORY AND COPIES OF DESIGN SENT TO THE ARCHITECT FOR REVIEW. COMPRESSIVE STRENGTH TEST REPORTS SHALL BE SUBMITTED TO THE ARCHITECT AND ALL CONCRETE MIXES SHALL INCLUDE A POLYMER BASED WATER REDUCING ADMIXTURE PER ASTM C494. MAXIMUM WATER/CEMENT RATIO SHALL BE 0.50. CONCRETE EXPOSED TO FREEZING AND THAWING SHALL HAVE REDUCED W/C RATIO IN ACCORDANCE WITH TABLE 19.3.2.1.

3.1.4 FLY ASH SHALL CONFORM TO ASTM C618, CLASS N OR F. FLY ASH SHALL NOT EXCEED 15% OF CEMENT BY WEIGHT, AND SHALL NOT EXPERIENCE A LOSS ON IGNITION OF GREATER THAN 1%.

3.1.5 SHRINKAGE AT 28 DAYS SHALL NOT EXCEED .055% FOR DRY CURING AS DETERMINED BY ASTM C157.

3.1.6 REINFORCING BARS, ANCHOR BOLTS AND CONCRETE INSERTS SHALL BE PROPERLY LOCATED AND SECURELY FASTENED IN POSITION PRIOR TO PLACING CONCRETE.

3.1.7 MAXIMUM CONCRETE SLUMP SHALL NOT EXCEED 4" FOR FOOTINGS, MASS CONCRETE, AND SLABS-ON-GRADE, AND 5" FOR OTHER CONCRETE UNLESS CONCRETE CONTAINS A MID-RANGE OR HIGH-RANGE WATER-REDUCING ADMIXTURE.

3.1.8 THE REQUIRED AVERAGE COMPRESSIVE STRENGTH (f'cr) USED AS THE BASIS FOR SELECTION OF CONCRETE PROPORTIONS SHALL BE 3500 psi FOR f'c EQUAL TO 2500 PSI UNLESS A LOWER f'cr CAN BE JUSTIFIED THROUGH BREAK HISTORY. THE REQUIRED AVERAGE COMPRESSIVE STRENGTH (f'cr) USED AS THE BASIS FOR SELECTION OF CONCRETE PROPORTIONS SHALL BE f'c + 1200 PSI FOR f'c GREATER THAN 2500 PSI UNLESS A LOWER f'cr CAN BE JUSTIFIED THROUGH BREAK HISTORY.

THE AVERAGE COMPRESSIVE STRENGTH (f'c) OF CONCRETE SHALL BE AS FOLLOWS:	PSI	DAYS
A. LEAN CONC. FILL	1000	28
B. SLABS-ON-GRADE	3000	28
C. FOOTINGS	3000	28

3.1.9 PROJECTING CORNERS OF ALL CONCRETE MEMBERS SHALL BE FORMED WITH 3/4" CHAMFER UNLESS DETAILED OTHERWISE.

3.1.10 THE OUTSIDE DIAMETER (O.D) OF CONDUIT OR PIPE PLACED IN THE PLANE OF A SLAB-ON-GRADE SHALL NOT EXCEED 30% OF SLAB THICKNESS UNLESS SPECIFICALLY DETAILED OTHERWISE AND SHALL BE LOCATED IN MIDDLE 1/3 OF SLAB. CLEAR SPACING BETWEEN ADJACENT CONDUITS OR PIPES SHALL BE TWICE THE LARGER O.D. MINIMUM, UNLESS OTHERWISE NOTED ON PLANS.

3.1.11 SURFACES OF JOINTS REFERENCED AS "COLD JOINTS", SHALL BE TROWELED OR OTHERWISE FINISHED SMOOTH WITH 2 LAYERS OF BUILDING PAPER BETWEEN SURFACES. ALL OTHER HORIZONTAL CONSTRUCTION JOINTS SHALL BE CLEANED AND ROUGHENED TO 1/4" +/- AMPLITUDE BY EXPOSING CLEAN AGGREGATE SOLIDLY EMBEDDED IN MORTAR MATRIX, UNLESS OTHERWISE NOTED. IN THE EVENT THAT THE CONTACT SURFACE BECOMES COATED WITH EARTH, SAWDUST, ETC., AFTER BEING CLEANED, THE ENTIRE SURFACE SO COATED SHALL BE RECLEANED.

3.1.12 EMBED OF POST INSTALLED ANCHORS SHOWN ON THE DRAWINGS ARE EFFECTIVE EMBEDS. SEE MANUFACTURERS INSTALLATION INSTRUCTIONS FOR REQUIRED DEPTH OF HOLE, NOMINAL EMBED AND ALL OTHER REQUIREMENTS. WHEN INSTALLING POST-INSTALLED ANCHORS IN EXISTING REINFORCED CONCRETE USE CARE AND CAUTION TO AVOID CUTTING OR DAMAGING THE EXISTING REINFORCING. LOCATE THE REINFORCING BY USING A NON-DESTRUCTIVE METHOD PRIOR TO INSTALLATION. MAINTAIN A MINIMUM CLEARANCE OF ONE INCH BETWEEN THE REINFORCEMENT AND THE POST-INSTALLED ANCHOR.

3.1.13 POST INSTALLED ANCHORS SHALL BE INSTALLED A MINIMUM OF 3 BOLT DIAMETERS TO THE EDGE OF EXISTING ABANDONED OR MIS-DRILLED ANCHOR HOLES. A MINIMUM OF 1 1/2 BOLT DIAMETERS MAY BE USED PROVIDED ABANDONED OR MIS-DRILLED HOLES ARE FILLED WITH DRYPACK MORTAR.

3.2 REINFORCING STEEL:

3.2.1 REINFORCING STEEL SHALL CONFORM TO A615 GRADE 60 IN ALL CONCRETE AND MASONRY UNLESS NOTED OTHERWISE ON THE PLANS. REINFORCING STEEL THAT IS TO BE WELDED SHALL BE ASTM A706. A706 REBAR SHALL BE WELDED PER THE AMERICAN WELDING SOCIETY STRUCTURAL WELDING CODE.

3.2.2 CLEAR COVERAGE OF CONCRETE OVER OUTER REINFORCING BARS SHALL BE AS FOLLOWS (UNLESS OTHERWISE NOTED):

A.	CONCRETE CAST AGAINST AND EXPOSED TO EARTH	3"
B.	INTERIOR STRUCTURAL SLABS, TOP AND BOTTOM	3/4"
C.	FORMED CONCRETE EXPOSED TO EARTH OR WEATHER	
	#6 BAR OR LARGER	2"
	#5 BAR AND SMALLER	1 1/2"

3.2.4 ALL REINFORCING BAR BENDS SHALL BE MADE COLD.

3.2.5 REINFORCING BARS SHALL BE SPLICED AS SHOWN ON DRAWINGS. ANY ADDITIONAL SPLICING SHALL REQUIRE REVIEW FROM THE ENGINEER.

3.2.6 MINIMUM LAP OF REINFORCING STEEL IN CONCRETE SHALL BE PER SCHEDULE 4/S410.

5.1 STRUCTURAL STEEL:

5.1.1 STRUCTURAL STEEL SHALL CONFORM TO THE FOLLOWING ASTM SPECIFICATIONS U.O.N.:

1. A36 W/ Fy = 36 KSI FOR ANGLES, CHANNELS, MISC CHANNELS & FLAT PLATES
2. A53 TYPE "S" GRADE "B" W/ Fy = 35 KSI FOR PIPE COLUMNS
3. A500 GRADE "C" W/ Fy = 46 KSI FOR ROUND HSS & Fy = 50 KSI FOR RECTANGULAR HSS
4. A307 MACHINE BOLTS
5. A36 OR F1554 GRADE 36 FOR THR'D ROD

ALL STRUCTURAL STEEL SHALL BE FABRICATED AND ERECTED IN ACCORDANCE WITH AISC SPECIFICATIONS AND CODE OF STANDARD PRACTICE AS AMENDED TO DATE.

5.1.2 THE STRUCTURAL STEEL FABRICATOR SHALL FURNISH SHOP AND ERECTION DRAWINGS OF ALL STEEL FOR THE ENGINEER'S REVIEW BEFORE FABRICATION.

5.1.3 ALL WELDING SHALL BE DONE BY CERTIFIED WELDERS PER THE AMERICAN WELDING SOCIETY STRUCTURAL WELDING CODE D1.1 & D1.8, U.O.N.

5.1.4 ALL STEEL EXCEPT WHERE ENCASED IN CONCRETE SHALL BE PAINTED OR COATED WITH SPRAY APPLIED FIREPROOFING, UNLESS OTHERWISE NOTED. SEE ARCH. FOR AREAS OF FIREPROOFING.

5.1.5 STRUCTURAL STEEL FRAMING MEMBERS (EXCEPT METAL DECK, STEEL STUDS, ETC.) SHALL BE SUPPORTED DURING FIELD WELDING. SUPPORTS SHALL REMAIN IN PLACE UNTIL STEEL TEMPERATURE HAS RETURNED TO AMBIENT TEMPERATURE.

5.1.6 OPENINGS SHALL NOT BE PLACED IN STEEL MEMBERS UNLESS SPECIFICALLY DETAILED. STEEL MEMBERS SHALL BE SHORED WHEN PERMISSIBLE HOLES ARE FLAME CUT AFTER STEEL IS ERECTED. THE SHORES SHALL REMAIN IN PLACE UNTIL STEEL TEMPERATURE HAS RETURNED TO AMBIENT TEMPERATURE.

5.1.7 STIFFENERS SHALL HAVE THE SAME WIDTH AS THE FLANGES OF THE STEEL MEMBERS UNLESS DETAILED OTHERWISE. BEARING STIFFENERS SHALL HAVE CLOSE BEARING AGAINST FLANGES PER AISC MANUAL OF STEEL CONSTRUCTION SPECIFICATIONS, CHAPTER J10.

5.1.8 BASE PLATES SHALL BE FINISHED PER AISC SPECIFICATIONS, CHAPTER M2.8. COLUMN ENDS SHALL BE FINISHED PER AISC CODE OF STANDARD PRACTICE, SECTION 6.2.2.

5.2 STRUCTURAL STEEL STUDS:

5.2.2 SELF-TAPPING SHEET METAL SCREWS SHALL COMPLY WITH ASTM C 1513, ASME B18.6.4 AND ICC-ES AC 118. PENETRATIONS OF SCREWS THROUGH JOINED MATERIAL SHALL NOT BE LESS THAN THREE EXPOSED THREADS.

5.3 METAL DECK:

5.3.1 METAL DECK SHALL BE AS MANUFACTURED BY ASC STEEL DECK, IAPMO APPROVAL NO. ER-0161 AND ER-0329, OR APPROVED EQUIVALENT AND SHALL BE INSTALLED PER THE ICC OR IAPMO APPROVAL.

5.3.2 METAL DECK SHALL BE FORMED FROM STEEL SHEETS CONFORMING TO ASTM A653 WITH Fy = 38 KSI & SHALL BE GALVANIZED, U.O.N. TO BE PRIME PAINTED BY ARCH. UNITS SHALL BE FASTENED TO STRUCTURAL MEMBERS WITH PUDDLE WELDS OR MECHANICAL FASTENERS AT INTERVALS INDICATED ON STRUCTURAL DRAWINGS, SIDELAP OF ADJACENT UNITS SHALL BE ATTACHED AS INDICATED ON STRUCTURAL DRAWINGS.

6.1 FRAMING LUMBER:

6.1.1 ALL FRAMING LUMBER SHALL BE DOUGLAS FIR-LARCH S4S, UNLESS OTHERWISE NOTED, AND SHALL BEAR THE GRADE STAMP OF AN APPROVED GRADING AGENCY. ALL SILLS, PLATES, SLEEPERS, LEDGERS & NAILERS IN CONTACT WITH CONCRETE OR MASONRY SHALL BE PRESSURE TREATED DOUGLAS FIR #1 AND EACH PIECE SHALL BEAR THE A.W.P.A. STAMP. TREATED WOOD SILLS WHERE CUT, DRILLED, OR NOTCHED SHALL BE TREATED WITH A PRESERVATIVE PER A.W.P.A. M-84 AND APPROVED BY THE ARCHITECT. THE FOLLOWING GRADES SHALL BE THE MINIMUM ACCEPTABLE GRADES UNLESS OTHERWISE NOTED ON PLANS AND NO MEMBERS MAY FALL BELOW ACCEPTABLE GRADE PER CBC 2303.1.1.

FRAMING TYPE	LUMBER GRADE	MAX. MOISTURE CONTENT AT TIME OF INSTALL
A. STUDS AND SILL PLATES 2" TO 4" THICK	NO. 1	19%
B. BEAMS AND HEADERS:		
2" TO 4" THICK AND WIDER	NO. 1	19%
5" AND THICKER	NO. 1	19%
C. POSTS	NO. 1	19%
D. 2X RAFTERS AND JOISTS	NO. 1 & SEL. STR.	19%
E. TOP PLATES AND LEDGERS	NO. 1	19%
F. MISC. FRM'G. AND BLK'G. NOT NOTED ABOVE	NO. 1	19%

6.1.2 APA RATED SHEATHING SHALL CONFORM TO U.S. PRODUCT STANDARD PS 1 OR PS 2 AND EACH PANEL SHALL BEAR APA STAMP. STAGGER SHEETS 4'-0" AND APPLY WITH FACE GRAIN PERPENDICULAR TO SUPPORTS (WHERE STUD SPACING IS 16" O.C. OR LESS FACE GRAIN MAY BE PARALLEL TO STUDS). MAXIMUM SIZE OF UNFRAMED HOLES IN SHEATHING SHALL BE 4" IN DIAMETER OR 4" SQUARE. WHERE HOLES OR NOTCHES ARE CUT IN SHEETS SAW CUTS SHALL NOT RUN BY THE CORNERS OF THE OPENINGS.

6.1.3 ALL FRAMING ANCHORS, CLIPS, STRAPS, HANGERS, ETC. REFERENCED ON THE DRAWINGS SHALL BE MANUFACTURED BY SIMPSON STRONG-TIE COMPANY OR EQUIVALENT, AS APPROVED BY THE STRUCTURAL ENGINEER AND INSTALLED TO RESIST MAXIMUM RATED LOADS WITH CORROSION RESISTANT COATINGS RECOMMENDED BY MFR. AT PRESERVATIVE-TREATED WOOD.

6.1.4 NAILING SHALL CONFORM WITH TABLE 2304.10 OF CALIFORNIA BUILDING CODE, UNLESS OTHERWISE NOTED ON PLANS. ALL NAILS EXPOSED TO THE WEATHER OR IN P.T. MEMBERS SHALL BE HOT DIPPED GALVANIZED PER CBC 2304.10.6.1. NAILS REFERENCED IN THE DRAWINGS SHALL HAVE THE FOLLOWING MINIMUM DIMENSIONS EXCLUDING COATINGS, U.O.N.:

NAIL DESIGNATION	DIAMETER (IN)	LENGTH (IN)
40d	0.225	5
16d	0.162	3 1/2
10d	0.148	3
8d	0.131	2 1/2
6d	0.113	2

6.1.5 ANCHOR BOLTS TO BE 5/8" DIAMETER, ASTM A307, LENGTH AS REQ'D. W/ STANDARD WASHERS (MIN. 0.229" THK. WASHER AS PER CBC 2308.3.1.1), AND A MINIMUM EMBEDMENT OF 7" INCHES INTO FOUNDATIONS EXCLUDING CURBS. ANCHOR BOLTS SHALL BE PLACED WITHIN 12 INCHES (MAX.) 4 INCHES (MIN.) OF ENDS AND SPLICES OF PLATES AND 4 FEET ON CENTER, UNLESS OTHERWISE NOTED. ANCHOR BOLTS WITH UPSET THREADS ARE NOT ALLOWED. ANCHOR BOLTS, NUTS & WASHERS SHALL BE HOT DIPPED GALVANIZED, STAINLESS STEEL, OR MECHANICALLY DEPOSITED ZINC-COATED STEEL WITH COATING WEIGHTS IN ACCORDANCE WITH ASTM B695, CLASS 55 MIN. 5/8" DIAMETER ANCHOR BOLTS NOT INSTALLED AT A CONC. CURB CAN BE SUBSTITUTED ON A 1:1 BASIS WITH A SIMPSON THDB62800HMG.

6.1.7 INTERIOR NON-BEARING WALLS SHALL BE SECURED TO SLAB WITH 3/8" DIAMETER X 2" EMBEDMENT HILTI KWIK BOLT TZ2 OR SIMPSON STRONG-BOLT 2 PLACED 4 FEET ON CENTER WITHIN 12 INCHES OF ENDS OF WALLS AND PLATE SPLICES, U.O.N. IN DETAILS. TENSION OR TORQUE TEST 10% OF THE BOLTS PER THE SCHEDULE ON SHEET S120. (USE 3/8" DIAMETER ANC. BOLTS WHERE SILL PLATE IS PLACED ON CONC. CURBS). CONTRACTOR'S OPTION: USE HILTI X-U 72P8 S36 POWDER ACTUATED FASTENERS AT 32 INCHES ON CENTER (EXCEPT AT CONCRETE CURBS) INSTALL PER ICC NO. ESR-2269.

6.2 ROUGH CARPENTRY:

6.2.1 ALL FLUSH-FRAMED JOISTS SHALL SEAT IN SIMPSON HANGERS, UNLESS OTHERWISE NOTED.

6.2.2 BOLT & LAG SCREW HEADS AND NUTS AGAINST WOOD SHALL BEAR AGAINST STANDARD STEEL WASHERS, UNLESS SPECIAL WASHERS ARE INDICATED ON PLANS OR DETAILS. JUST PRIOR TO COVERING ROUGH FRAMING, ALL BOLTS AND LAGS IN WOOD MEMBERS SHALL BE RE-TIGHTENED.

6.2.3 LAG SCREWS SHALL BE THREADED INTO LEAD HOLES BORED AS FOLLOWS: THE LEAD HOLE FOR THE SHANK SHALL BE THE SAME DEPTH AND DIAMETER AS THE SHANK. THE LEAD HOLE FOR THE THREADED PORTION SHALL HAVE A DIAMETER EQUAL TO 60 TO 75 PERCENT OF THE SHANK DIAMETER AND A DEPTH EQUAL TO AT LEAST THE LENGTH OF THE THREADED PORTION.

6.2.4 CUTTING AND BORING OF WOOD STUDS:
A. LET-INS ARE NOT PERMITTED.
B. NOTCHING OF STUDS IS NOT PERMITTED.
C. NEATLY BORED HOLES NOT GREATER THAT 40% OF THE WIDTH OF THE STUD ARE PERMITTED IN ANY WALL, PROVIDED THAT THEY ARE INSTALLED AT THE CENTERLINE OF THE STUDS.

6.2.5 FOUNDATION WALL TO BE A MINIMUM OF 8" ABOVE THE HIGHEST ADJACENT FINISH GRADE. (6" IF ADJACENT GRADE IS ASPHALT OR A 18" WIDE CONCRETE APRON SLOPING AWAY FROM BUILDING.)

6.2.6 USE SINGLE TRIMMER EACH END OF EACH BEAM AND HEADER UNLESS OTHERWISE NOTED ON PLAN.

6.2.7 BRIDGING SHALL BE INSTALLED BETWEEN FLOOR OR ROOF JOISTS IN ACCORDANCE WITH SECTION 2308.4.6 OF THE CALIFORNIA BUILDING CODE.

6.4 MANUFACTURED JOISTS:

6.4.1 MANUFACTURED JOISTS SHALL BE TRUSS JOIST AND SHALL CONFORM TO THE REQUIREMENTS OF ICC REPORT NUMBER ESR-1153.

6.4.2 SUBSTITUTIONS SHALL HAVE EQUIVALENT STRUCTURAL PROPERTIES AND SHALL BE REVIEWED BY THE ENGINEER AND SHALL HAVE ICC APPROVAL.

6.4.3 SUBSTITUTED JOISTS SHALL BE DESIGNED FOR THE DEAD LOADS OF THE MATERIALS SHOWN ON THE DRAWINGS PLUS APPLICABLE WIND, SNOW AND LIVE LOADS AS NOTED ON THE PLAN.

6.4.4 MANUFACTURER OF SUBSTITUTED JOISTS SHALL FURNISH SHOP DRAWINGS AND SHALL ADDRESS ANY CONCERNS OR REQUIREMENTS OF THE BUILDING DEPARTMENT PERTAINING TO THEIR PRODUCTS.

6.4.5 ALL JOISTS SHALL BE IDENTIFIED BY A MANUFACTURER'S STAMP INDICATING JOIST TYPE, ICC REPORT NUMBER, MANUFACTURER NAME, PLANT NUMBER, PRODUCTION DATE AND THE LOGO OF THE INSPECTION AGENCY (PFS CORPORATION OR APA).

6.5 ENGINEERED LUMBER:

6.5.1 TRUS JOIST 'MICROLLAM' LVL: 1/8" OR 1/10" DOUGLAS FIR VENEER GLUED IN A CONTINUOUS PROCESS CONFORMING TO ICC REPORT NO. ESR-1387. LVL SHALL BE SINGLE ONE-PIECE LENGTHS FREE OF FINGER JOINTS, SCARF JOINTS OR MECHANICAL CONNECTIONS. EXTREME FIBER STRESS IN BENDING fb = 2600 PSI, MODULUS OF ELASTICITY E = 1,900,000 PSI. EACH PIECE SHALL BE PROPERLY IDENTIFIED PER ICC REPORT NO. ESR-1387.

6.5.2 TRUS JOIST 'TIMBERSTRAND' LSL: DOUGLAS FIR LARCH STRANDS ORIENTED IN A PARALLEL DIRECTION GLUED UP IN A CONTINUOUS PROCESS CONFORMING TO ICC REPORT NO. ESR-1387. LSL SHALL BE SINGLE ONE-PIECE LENGTHS FREE OF FINGER JOINTS, SCARF JOINTS OR MECHANICAL CONNECTIONS. EXTREME FIBER STRESS IN BENDING fb = 2250 PSI, MODULUS OF ELASTICITY E = 1,500,000 PSI. EACH PIECE SHALL BE PROPERLY IDENTIFIED PER ICC REPORT NO. ESR-1387.

6.6 FIRE RATED SHEATHING:

6.6.1 FIRE RATED SHEATHING SHALL BE AS MANUFACTURED BY VIANCE D-BLAZE, ICC APPROVAL NO. ESR-2645, OR APPROVED EQUIVALENT AND SHALL BE INSTALLED PER THE ICC APPROVAL.

6.6.2 APA RATED SHEATHING SHALL CONFORM TO U.S. PRODUCT STANDARD PS 1 OR PS 2 AND EACH PANEL SHALL BEAR APA STAMP. STAGGER SHEETS 4'-0" AND APPLY WITH FACE GRAIN PERPENDICULAR TO SUPPORTS (WHERE STUD SPACING IS 16" O.C. OR LESS FACE GRAIN MAY BE PARALLEL TO STUDS). MAXIMUM SIZE OF UNFRAMED HOLES IN SHEATHING SHALL BE 4" IN DIAMETER OR 4" SQUARE. WHERE HOLES OR NOTCHES ARE CUT IN SHEETS SAW CUTS SHALL NOT RUN BY THE CORNERS OF THE OPENINGS.

6.6.3 FASTENING OF SHEATHING SHALL CONFORM WITH TABLE D2-1 OF AISI S213-07/S1-09 STANDARD. ALL FASTERNERS IN FIRE TREATED SHEATHING SHALL BE STAINLESS STEEL OR GALVANIZED.

SHEET INDEX

S110	STRUCTURAL GENERAL NOTES
S120	TESTING AND SPECIAL INSPECTION TESTS
S210	PARTIAL FOUNDATION PLAN
S211	PARTIAL FOUNDATION PLAN
S212	PARTIAL FOUNDATION & FLOOR FRAMING PLANS
S220	PARTIAL LOW ROOF FRAMING PLANS
S221	PARTIAL LOW ROOF FRAMING PLANS
S230	PARTIAL ROOF FRAMING PLAN
S410	FOUNDATION DETAILS
S411	FOUNDATION AND FRAMING DETAILS
S610	TYPICAL WOOD FRAMING DETAILS & SECTIONS
S620	FRAMING & EQUIPMENT ANCHORAGE DETAILS
S621	FRAMING & EQUIPMENT ANCHORAGE DETAILS
S622	FRAMING DETAILS

Copyright © 2025

All ideas, designs, arrangements and plans indicated or represented by this drawing are owned by, and the property of, NICHOLS, MELBURG and ROSSETTO and were created, evolved and developed for use on, and in conjunction with, the specified project. None of such ideas, designs, arrangements or plans shall be used by, or disclosed to any person, firm or corporation for any purpose whatsoever without the written permission of NICHOLS, MELBURG and ROSSETTO.

NICHOLS MELBURG & ROSSETTO
ARCHITECTS + ENGINEERS
300 KNOLLCREST DRIVE
REDDING, CA. 96002
(530) 222-3300 (530) 222-3538 FAX
http://www.nmrdesign.com

CONSULTANTS

STRUCTURAL ENGINEERING
555 MAIN STREET, STE. 300
CHICO, CA. 95928
(530) 891-1710 (530) 891-0138 FAX
https://nmrdesign.com

LICENSE STAMPS

REGISTERED PROFESSIONAL ENGINEER
LEONARD V. FISHER
No. 3139
EXP. 9-30-25
STRUCTURAL
STATE OF CALIFORNIA

PROJECT NAME

TEHAMA COUNTY CORNING VETERAN'S HALL

1620 SOLANO ST.
CORNING, CA

SHEET TITLE

STRUCTURAL GENERAL NOTES

DRAWING STATUS

CONSTRUCTION DOCUMENTS

REVISIONS

Sym.	Description	Date

Drawn By	NMR
Date Issued	2/13/2025
Scale	NONE
Project No.	21-6497

SHEET No.

S110

TESTING & SPECIAL INSPECTIONS

7.0 SPECIAL INSPECTION:

7.1.1 GENERAL:

THE OWNER SHALL EMPLOY A SPECIAL INSPECTOR DURING CONSTRUCTION ON THE PHASES OF WORK LISTED HERE IN SECTION 7 AND THE FOLLOWING TABLES.

THE SPECIAL INSPECTOR SHALL BE A QUALIFIED PERSON WHO SHALL DEMONSTRATE HIS COMPETENCE TO THE SATISFACTION OF THE BUILDING OFFICIAL, FOR INSPECTION OF A PARTICULAR TYPE OF CONSTRUCTION OR OPERATION.

THE CONTRACTOR SHALL SUBMIT A STATEMENT OF RESPONSIBILITY TO THE BUILDING OFFICIAL AND OWNER PRIOR TO COMMENCEMENT OF WORK FOR EACH ITEM REQUIRING SPECIAL INSPECTION OR TESTING. THE STATEMENT SHALL CONTAIN THE FOLLOWING:

1. ACKNOWLEDGEMENT OF AWARENESS OF THE SPECIAL REQUIREMENTS CONTAINED WITHIN THE TESTING AND INSPECTION SECTIONS OF THE CONSTRUCTION DOCUMENTS.
2. ACKNOWLEDGMENT THAT CONTROL WILL BE EXERCISED TO OBTAIN CONFORMANCE WITH THE CONSTRUCTION DOCUMENTS APPROVED BY THE BUILDING OFFICIAL.
3. PROCEDURES FOR EXERCISING CONTROL WITHIN THE CONTRACTOR'S ORGANIZATION, THE METHOD AND FREQUENCY OF REPORTING AND THE DISTRIBUTION OF THE REPORTS.
4. IDENTIFICATION AND QUALIFICATIONS OF THE PERSON(S) EXERCISING SUCH CONTROL AND THEIR POSITION(S) IN THE ORGANIZATION.

7.1.2 REPORTS:

THE THE SPECIAL INSPECTOR SHALL KEEP RECORDS OF INSPECTIONS AND FURNISH INSPECTION REPORTS TO THE BUILDING OFFICIAL, AND TO THE REGISTERED DESIGN PROFESSIONAL IN RESPONSIBLE CHARGE. REPORTS SHALL INDICATE THAT THE WORK INSPECTED WAS OR WAS NOT DONE IN CONFORMANCE TO APPROVED CONSTRUCTION DOCUMENTS. DISCREPANCIES SHALL BE BROUGHT TO THE IMMEDIATE ATTENTION OF THE CONTRACTOR FOR CORRECTION. IF NOT CORRECTED, THE DISCREPANCIES SHALL BE BROUGHT TO THE ATTENTION OF THE BUILDING OFFICIAL AND TO THE REGISTERED DESIGN PROFESSIONAL IN RESPONSIBLE CHARGE PRIOR TO THE COMPLETION OF THAT PHASE OF THE WORK.

A FINAL REPORT DOCUMENTING REQUIRED SPECIAL INSPECTIONS AND CORRECTION OF ANY DISCREPANCIES NOTED IN THE INSPECTIONS SHALL BE SUBMITTED AT A TIME AGREED UPON BY THE PERMIT APPLICANT AND THE BUILDING OFFICIAL PRIOR TO THE START OF WORK.

7.1.3 FABRICATION:

WHERE FABRICATION OF STRUCTURAL LOAD-BEARING MEMBERS AND ASSEMBLIES IS BEING PERFORMED ON THE PREMISES OF A FABRICATOR'S SHOP, SPECIAL INSPECTION SHALL BE PERFORMED.

THE SPECIAL INSPECTOR SHALL VERIFY THAT THE FABRICATOR MAINTAINS DETAILED FABRICATION AND QUALITY CONTROL PROCEDURES THAT PROVIDE A BASIS FOR INSPECTION CONTROL FOR THE WORKMANSHIP AND THE FABRICATOR'S ABILITY TO CONFORM TO APPROVED CONSTRUCTION DOCUMENTS AND REFERENCED STANDARDS. THE SPECIAL INSPECTOR SHALL REVIEW THE PROCEDURES FOR COMPLETENESS AND ADEQUACY RELATIVE TO THE CODE REQUIREMENTS FOR THE FABRICATOR'S SCOPE OF WORK.

SPECIAL INSPECTION IS NOT REQUIRED IF WORK IS DONE ON THE PREMISES OF A FABRICATOR REGISTERED AND APPROVED TO PERFORM SUCH WORK WITHOUT SPECIAL INSPECTION. APPROVAL SHALL BE BASED UPON REVIEW OF THE FABRICATOR'S WRITTEN PROCEDURAL AND QUALITY CONTROL MANUALS AND PERIODIC AUDITING OF FABRICATION PRACTICES BY AN APPROVED SPECIAL INSPECTION AGENCY. AT COMPLETION OF FABRICATION, THE APPROVED FABRICATOR SHALL SUBMIT A CERTIFICATE OF COMPLIANCE TO THE BUILDING OFFICIAL STATING THAT THE WORK WAS PERFORMED IN ACCORDANCE WITH THE APPROVED CONSTRUCTION DOCUMENTS.

7.2 STEEL CONSTRUCTION:

STEEL ELEMENTS SHALL REQUIRE INSPECTIONS PER AISC 360.

SPECIAL INSPECTION SHALL NOT BE REQUIRED WHERE THE STEEL FABRICATION PROCESS DOES NOT PERFORM ANY WELDING, THERMAL CUTTING OR HEATING OPERATION OF ANY KIND AS PART OF THE FABRICATION PROCESS. IN SUCH CASES, THE FABRICATOR SHALL BE REQUIRED TO SUBMIT A DETAILED PROCEDURE FOR MATERIAL CONTROL THAT DEMONSTRATES THE FABRICATOR'S ABILITY TO MAINTAIN SUITABLE RECORDS AND PROCEDURES SUCH THAT, AT ANY TIME DURING THE FABRICATION PROCESS, THE MATERIAL SPECIFICATION, GRADE AND MILL TEST REPORTS FOR THE MAIN STRESS-CARRYING ELEMENTS ARE CAPABLE OF BEING DETERMINED.

7.2.2 WELDING OF REINFORCING STEEL:

INSPECTION AND QUALIFICATION OF WELDING SHALL BE IN COMPLIANCE WITH AWS D1.4 AND ACI 318.

7.2.3 DETAILS:

VERIFY THE STEEL SEISMIC RESISTING SYSTEM IS IN COMPLIANCE WITH THE DETAILS SHOWN ON THE APPROVED CONSTRUCTION DOCUMENTS.

7.3 CONCRETE CONSTRUCTION:

INSPECTION AND VERIFICATION SHALL BE AS REQUIRED BY THE FOLLOWING AND TABLE 1705.3

SPECIAL INSPECTION SHALL NOT BE REQUIRED FOR THE FOLLOWING:

1. ISOLATED SPREAD FOOTINGS OF BUILDINGS THREE STORIES OR LESS ABOVE GRADE PLANE THAT ARE FULLY SUPPORTED ON EARTH OR ROCK.
2. NONSTRUCTURAL CONCRETE SLABS SUPPORTED DIRECTLY ON THE GROUND, INCLUDING PRESTRESSED SLABS ON GRADE, WHERE THE EFFECTIVE PRESTRESS IN THE CONCRETE IS LESS THAN 150 PSI.
3. CONCRETE PATIOS, DRIVEWAYS AND SIDEWALKS, ON GRADE.

SAMPLES FOR STRENGTH TEST OF EACH CLASS OF CONCRETE PLACED EACH DAY SHALL BE TAKEN NOT LESS THAN ONCE A DAY, NOT LESS THAN ONCE FOR EACH 150 CUBIC YARDS OF CONCRETE, NOR LESS THAN ONCE FOR EACH 5000 SQUARE FEET OF SURFACE AREA FOR SLABS OR WALLS.

ON A GIVEN PROJECT, IF TOTAL VOLUME OF CONCRETE IS SUCH THAT FREQUENCY OF TESTING REQUIRED ABOVE WOULD PROVIDE LESS THAN FIVE STRENGTH TESTS FOR A GIVEN CLASS OF CONCRETE, TESTS SHALL BE MADE FROM AT LEAST FIVE RANDOMLY SELECTED BATCHES OR FROM EACH BATCH IF FEWER THAN FIVE BATCHES ARE USED.

WHEN TOTAL QUANTITY OF A GIVEN CLASS OF CONCRETE IS LESS THAN 50 CUBIC YARDS, STRENGTH TESTS ARE NOT REQUIRED WHEN EVIDENCE OF SATISFACTORY STRENGTH IS SUBMITTED TO AND APPROVED BY THE BUILDING OFFICIAL.

7.3.1 MATERIALS:

IN THE ABSENCE OF SUFFICIENT DATA OR DOCUMENTATION PROVIDING EVIDENCE OF CONFORMANCE TO QUALITY STANDARDS FOR MATERIALS IN ACI 318 CHAPTER 3, THE BUILDING OFFICIAL SHALL REQUIRE TESTING

CERTIFIED MILL TEST REPORTS SHALL BE SUBMITTED FOR EACH SHIPMENT OF REINFORCING USED IN CONCRETE.

7.5 WOOD CONSTRUCTION:

PREFABRICATED STRUCTURAL ELEMENTS AND ASSEMBLIES SHALL BE IN ACCORDANCE WITH FABRICATION REQUIREMENTS SPECIFIED UNDER SECTION 7.1.3.

7.6 SOILS:

EXCEPTION: WHERE CBC SECTION 1803 DOES NOT REQUIRE REPORTING OF MATERIALS AND PROCEDURES FOR FILL PLACEMENT, THE SPECIAL INSPECTOR SHALL VERIFY THAT THE IN-PLACE DRY DENSITY OF THE COMPACTED FILL IS NOT LESS THAN 90 PERCENT OF THE MAXIMUM DRY DENSITY AT OPTIMUM MOISTURE CONTENT DETERMINED IN ACCORDANCE WITH ASTM D 1557.

7.15 MECHANICAL AND ELECTRICAL COMPONENTS FOR SEISMIC RESISTANCE: (SEISMIC DESIGN CATEGORY D, E & F.

PERIODIC SPECIAL INSPECTION IS REQUIRED FOR THE FOLLOWING:

1. ANCHORAGE OF ELECTRICAL EQUIPMENT FOR EMERGENCY OR STANDBY POWER SYSTEMS.
2. INSTALLATION OF ANCHORAGE OF ELECTRICAL EQUIPMENT (SDC E & F ONLY).
3. INSTALLATION OF VIBRATION ISOLATION SYSTEMS WHERE CONSTRUCTION DOCUMENTS REQUIRE A NOMINAL CLEARANCE OF 1/4 INCH OR LESS BETWEEN THE EQUIPMENT SUPPORT FRAME AND RESTRAINT.

8.0 POST-INSTALLED ANCHORS TESTING REQUIREMENTS & PROCEDURES:

8.1 POST-INSTALLED ANCHORS IN CONCRETE & MASONRY:

1. APPLY PROOF TEST LOADS TO ANCHORS WITHOUT REMOVING THE NUT IF POSSIBLE. IF NOT, REMOVE NUT AND INSTALL A THREADED COUPLER TO THE SAME TIGHTNESS AS THE ORIGINAL NUT USING A TORQUE WRENCH AND APPLY LOAD.

2. CALIBRATION OF TESTING EQUIPMENT SHALL BE PERFORMED BY AN APPROVED TESTING LABORATORY IN ACCORDANCE WITH STANDARD PROCEDURES.

3. HYDRAULIC RAM: THE ANCHOR SHOULD HAVE NO OBSERVABLE MOVEMENT AT THE APPLICABLE TEST LOAD APPLIED FOR A MINIMUM OF 15 SECONDS. FOR ADHESIVE ANCHORS, THE TESTING DEVICE SHALL NOT RESTRICT THE CONCRETE SHEAR CONE FAILURE MECHANISM.

4. TORQUE WRENCH: THE APPLICABLE TEST TORQUE MUST BE ACHIEVED WITHIN ONE HALF (1/2) TURN OF THE NUT FOR WEDGE/SCREW TYPE ANCHORS EXCEPT 3/8" SLEEVE OR THREADED TYPE ANCHOR (AFTER INITIAL SEATING OF SCREW HEAD) WHERE TORQUE SHALL BE ACHIEVED WITHIN ONE-QUARTER (1/4) TURN OF THE NUT.

5. TEST 10% OF ANCHORS INSTALLED IN SILL PLATES, TEST 50% OF ANCHORS USED FOR NONSTRUCTURAL APPLICATIONS SUCH AS EQUIPMENT ANCHORAGE AND ALL ANCHORS USED FOR STRUCTURAL APPLICATION PER CBC SECTION 1909.2.7.3 EXCEPT AS FOLLOWS:

   A. UNDERCUT ANCHORS THAT ALLOW VISUAL CONFIRMATION OF FULL SET SHALL NOT REQUIRE TESTING.

   B. WHERE ADHESIVE ANCHOR SYSTEMS ARE USED TO INSTALL REINFORCING DOWEL BARS, ONLY 25 PERCENT OF THE DOWELS SHALL BE TESTED IF ALL THE FOLLOWING CONDITIONS ARE MET:

      a. THE DOWELS ARE USED EXCLUSIVELY AS SHEAR DOWELS BETWEEN NEW AND EXISTING CONCRETE.

      b. THE NUMBER OF DOWELS IN ANY ONE MEMBER EQUALS OR EXCEEDS TWELVE.

      c. THE DOWELS ARE UNIFORMLY DISTRIBUTED ACROSS SEISMIC FORCE RESISTING MEMBERS (SUCH AS SHEAR WALLS, COLLECTORS AND DIAPHRAGMS).

   ANCHORS TO BE TESTED SHALL BE SELECTED AT RANDOM BY THE SPECIAL INSPECTOR/INSPECTOR OF RECORD (IOR).

8.3 ADHESIVE ANCHOR INSTALLER CERTIFICATION:

ADHESIVE ANCHOR INSTALLERS FOR ANCHORS INSTALLED IN HORIZONTAL OR UPWARDLY INCLINED ORIENTATIONS THAT RESIST SUSTAINED TENSION SHALL HAVE AN ACI/CRSI ADHESIVE ANCHOR INSTALLERS CERTIFICATION OR AN EQUAL CERTIFICATION FROM THE MANUFACTURER OF THE ADHESIVE PRIOR TO INSTALLATION OF THE ANCHORS.

ALL OTHER INSTALLERS SHALL BE TRAINED BY THE MANUFACTURER FOR INSTALLATION OF THE ADHESIVE ANCHOR.

Login Name: LeonardF
Plot Date: February 13, 2025 - 11:43 am
File Name: S:\Swork\21 Projects\21-6497 Tehama Co Corning Vets Hall\02 DRWGS\21-6497 S110 SNOT.dwg
XREFS: X-TITL

TABLE 1705.3
REQUIRED SPECIAL INSPECTIONS AND TESTS OF CONCRETE CONSTRUCTION

VERIFICATION AND INSPECTION	CONTINUOUS	PERIODIC	REFERENCED STANDARD[a]	CBC REFERENCE
1. INSPECT REINFORCEMENT, INCLUDING PRESTRESSING TENDONS, AND VERIFY PLACEMENT.		X	ACI 318: Ch. 20, 25.2, 25.3, 26.6.1 - 26.6.3	1908.4
3. INSPECT ANCHORS CAST IN CONCETE		X	ACI 318: 17.8.2	
4. INSPECT ANCHORS POST-INSTALLED IN HARDENED CONCRETE MEMBERS.[b]				
A. ADHESIVE ANCHORS INSTALLED IN HORIZONTALLY OR UPWARDLY INCLINED ORIENTATIONS TO RESIST SUSTAINED TENSION LOADS	X		ACI 318: 17.8.2.4	
B. MECHANICAL ANCHORS AND ADHESIVE ANCHORS NOT DEFINDED IN 4.A		X	ACI 318: 17.8.2	
5. VERIFY USE OF REQUIRED DESIGN MIX		X	ACI 318: CH. 19, 26.4.3, 26.4.4	1904.1, 1904.2, 1908.2, 1908.3
6. PRIOR TO CONCRETE PLACEMENT, FABRICATE SPECIMENS FOR STRENGTH TESTS, PERFORM SLUMP AND AIR CONTENT TESTS, AND DETERMINE THE TEMPERATURE OF THE CONCRETE	X		ASTM C172 ASTM C31 ACI 318: 26.5, 26.12	1908.10
7. INSPECT CONCRETE AND SHOTCRETE PLACEMENT FOR PROPER APPLICATION TECHNIQUES	X		ACI 318: 26.5	1908.6, 1908.7, 1908.8
8. VERIFY MAINTENANCE OF SPECIFIED CURING TEMPERATURE AND TECHNIQUES		X	ACI 318: 26.5.3 - 26.5.5	1908.9
12. INSPECT FORMWORK FOR SHAPE, LOCATION AND DIMENSIONS OF THE CONCRETE MEMBER BEING FORMED		X	ACI 318: 26.11.1.2(b)	

a. WHERE APPLICABLE, SEE SECTION 1705.12, SPECIAL INSPECTIONS FOR SEISMIC RESISTANCE.
b. SPECIFIC REQUIREMENTS FOR SPECIAL INSPECTION SHALL BE INCLUDED IN THE RESEARCH REPORT FOR THE ANCHOR ISSUED BY AN APPROVED SOURCE IN ACCORDANCE WITH 17.8.2 IN ACI 318, OR OTHER QUALIFICATION PROCEDURES. WHERE SPECIFIC REQUIREMENTS SHALL BE SPECIFIED BY THE REGISTERED DESIGN PROFESSIONAL AND SHALL BE APPROVED BY THE BUILDING OFFICIAL PRIOR TO THE COMMENCEMENT OF THE WORK.
c. INSTALLATION OF ALL ADHESIVE ANCHORS IN HORIZONTAL AND UPWARDLY INCLINED POSITIONS SHALL BE PERFORMED BY AN ACI/CRSI CERTIFIED ADHESIVE ANCHOR INSTALLER, EXCEPT WHERE THE DESIGN TENSION ON THE ANCHORS IS LESS THAN 100 POUNDS AND THOSE ANCHORS ARE CLEARLY NOTED ON THE APPROVED CONSTRUCTION DOCUMENTS OR WHERE THE ANCHORS ARE SHEAR DOWELS ACROSS COLD JOINTS IN SLABS ON GRADE WHERE THE SLAB IS NOT PART OF THE LATERAL FORCE RESISTING SYSTEM.

TABLE 1705.6
REQUIRED SPECIAL INSPECTIONS AND TESTS OF SOILS

VERIFICATION AND INSPECTION	CONTINUOUS DURING TASK LISTED	PERIODICALLY DURING TASK LISTED
1. VERIFY MATERIALS BELOW SHALLOW FOUNDATIONS ARE ADEQUATE TO ACHIEVE THE DESIGN BEARING CAPACITY.		X
2. VERIFY EXCAVATIONS ARE EXTENDED TO PROPER DEPTH AND HAVE REACHED PROPER MATERIAL.		X

HILTI KB TZ2 CONCRETE REQ'TS

TORQUE TESTING REQ'TS FOR HILTI KWIK BOLT TZ2 SYSTEM IN CONCRETE

DIAMETER (IN)	EMBED (IN)	STAINLESS STL. TORQUE TEST (FT-LBS)	CARBON STL. TORQUE TEST (FT-LBS)
1/4	1 1/2	6	4
3/8	1 1/2	30	30
	2		
	2 1/2		
1/2	1 1/2	40	50
	2		
	2 1/2		
	3 1/4		
5/8	2 3/4	60	40
	3 1/4		
	4		
3/4	3 1/4	125	110
	3 3/4		
	4 3/4		
1	4	185	185
	5 3/4		

(BASED ON ICC NO. ESR-4266 DATED DECEMBER 2021)

NOTE:
WHEN TORQUE TESTING CANNOT BE APPLIED CONTACT ENG. FOR PULL TEST REQUIREMENTS

SIMPSON TITEN HD SCREW CONCRETE REQ'TS

MAX. TORQUE REQ'TS FOR SIMPSON TITEN HD SCREW SYSTEM IN CONCRETE

DIAMETER (IN)	EMBED (IN)	MAX. INSTALLATION TORQUE (FT-LBS)
1/4	1 5/8	24
	2 1/2	
3/8	2 1/2	50
	3 1/4	
1/2	3 1/4	65
	4	
5/8	4	100
	5 1/2	
3/4	4	150
	5 1/2	
	6 1/4	

(BASED ON ICC NO. ESR-2713 DATED SEPTEMBER 2022)

NOTE:
1. CARBON STL. ANCHORS LIMITED TO DRY INTERIOR CONDITIONS
2. STAINLESS STL. ANCHORS MAY BE USED IN EXTERIOR EXPOSURE OR DAMP ENVIRONMENTS

Copyright © 2025
All ideas, designs, arrangements and plans indicated or represented by this drawing are owned by, and the property of, NICHOLS, MELBURG and ROSSETTO and were created, evolved and developed for use on, and in conjunction with, the specified project. None of such ideas, designs, arrangements or plans shall be used by, or disclosed to any person, firm or corporation for any purpose whatsoever without the written permission of NICHOLS, MELBURG and ROSSETTO.

NICHOLS MELBURG & ROSSETTO
ARCHITECTS + ENGINEERS
300 KNOLLCREST DRIVE
REDDING, CA. 96002
(530) 222-3300 (530) 222-3538 FAX
http://www.nmrdesign.com

CONSULTANTS

STRUCTURAL ENGINEERING
555 MAIN STREET, STE. 300
CHICO, CA. 95928
(530) 891-1710 (530) 891-0138 FAX
https://nmrdesign.com

LICENSE STAMPS

REGISTERED PROFESSIONAL ENGINEER
LEONARD V. FISHER
No. 6139
EXP. 9-30-25
STRUCTURAL
STATE OF CALIFORNIA

PROJECT NAME

TEHAMA COUNTY
CORNING
VETERAN'S HALL

1620 SOLANO ST.
CORNING, CA

SHEET TITLE

TESTING & SPECIAL INSPECTIONS NOTES

DRAWING STATUS

CONSTRUCTION DOCUMENTS

REVISIONS

Sym.	Description	Date

Drawn By	NMR
Date Issued	2/13/2025
Scale	NONE
Project No.	21-6497

SHEET No.

S120

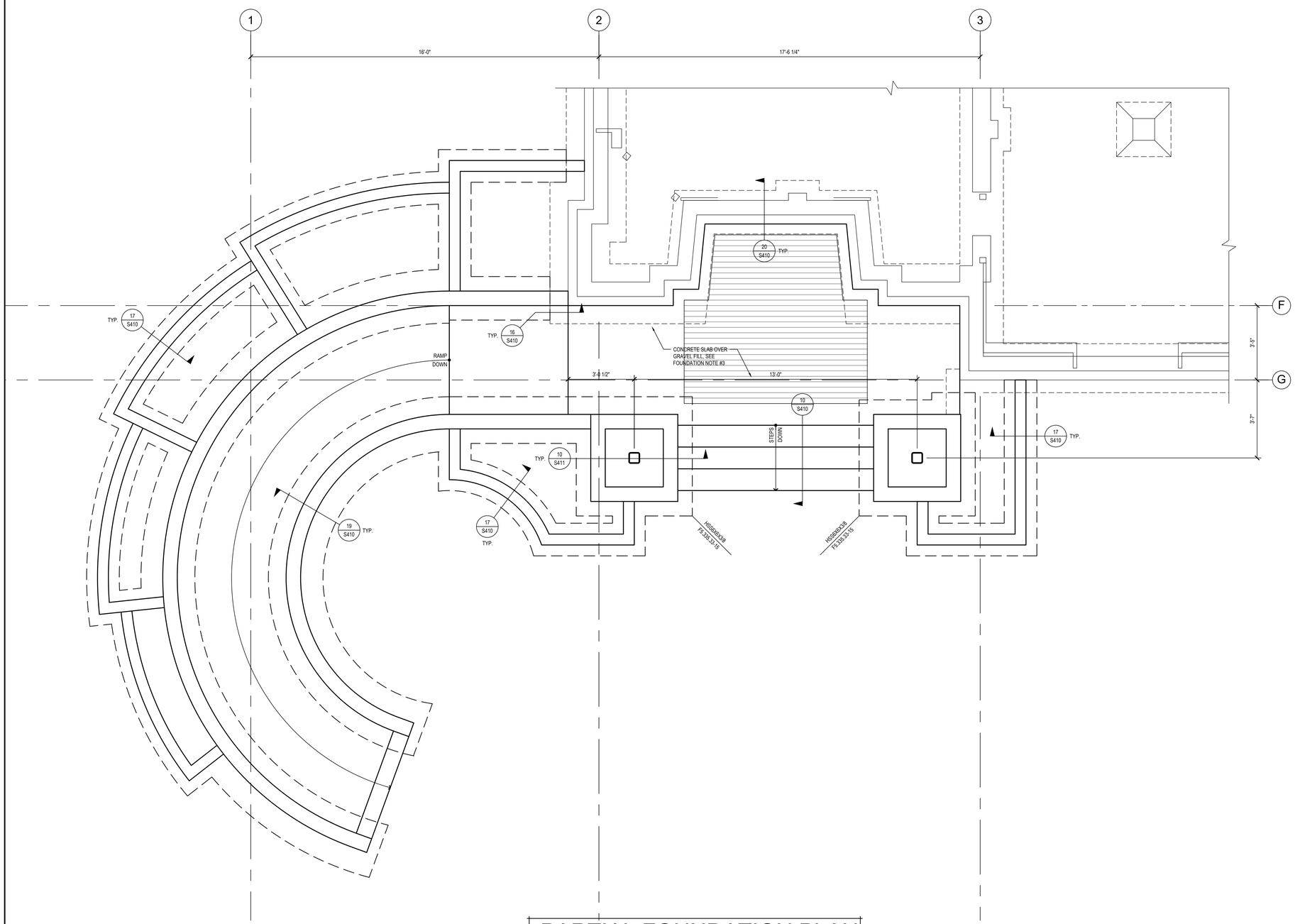

PARTIAL FOUNDATION PLAN

SCALE: 3/8" = 1'-0"

FOUNDATION NOTES

1. SEE GENERAL STRUCTURAL NOTES ON SHEET S110 FOR ADDITIONAL INFORMATION.
2. SEE ARCH FOR ALL DIMENSIONS & ELEVATIONS.
3. TYPICAL SLAB ON GRADE TO BE 4" THICK, REINFORCED W/ #3 @ 16" O.C. LOCATED 1" CLEAR FROM TOP OF SLAB, OVER FREE DRAINING GRAVEL. SEE SHEET S410 FOR TYPICAL FOUNDATION DETAILS.
4. INDICATES (E) 6X8 POST
   INDICATES (E) TAPERED CONCRETE PIERS
5. INDICATES (E) CONCRETE FOOTING AND STEM WALL
   INDICATES (E) BRICK
   INDICATES (E) FLOOR JOIST, SEE PLAN
   INDICATES (E) FLOOR GIRDER, SEE PLAN
   INDICATES CONCRETE FOOTING AND WALL
4. INDICATES COLUMN SIZE, SEE PLAN
   INDICATES FOOTING SIZE, SEE SCHEDULE
   HSS3X3X1/4
   F22-15
   INDICATES POST
   INDICATES CONC. PEDESTAL
   INDICATES SPREAD FOOTING. SEE 15/S410 FOR MORE INFO.

SPREAD FOOTING SCHEDULE

MARK	WIDTH "B"	DEPTH "D"	REINFORCEMENT
F55-15	5'-0" SQ.	15"	6- #5 EA. WAY T.&B.
F5.335.33-15	5'-4" SQ.	15"	6- #5 EA. WAY T.&B.

Copyright © 2025
All ideas, designs, arrangements and plans indicated or represented by this drawing are owned by, and the property of, NICHOLS, MELBURG and ROSSETTO and were created, evolved and developed for use on, and in conjunction with, the specified project. None of such ideas, designs, arrangements and plans shall be used by or disclosed to any person, firm or corporation for any purpose whatsoever without the written permission of NICHOLS, MELBURG and ROSSETTO.

NICHOLS MELBURG & ROSSETTO
ARCHITECTS + ENGINEERS
300 KNOLLCREST DRIVE
REDDING, CA. 96002
(530) 222-3300 (530) 222-3538 FAX
http://www.nmrdesign.com

CONSULTANTS

STRUCTURAL ENGINEERING
555 MAIN STREET, STE. 300
CHICO, CA. 95928
(530) 891-1710 (530) 891-0138 FAX
https://nmrdesign.com

LICENSE STAMPS

REGISTERED PROFESSIONAL ENGINEER
EDWARD V. FISHER
No. 1[illegible]
EXP. 6-30-25
STRUCTURAL
STATE OF CALIFORNIA

PROJECT NAME

TEHAMA COUNTY
CORNING
VETERAN'S HALL

1620 SOLANO ST.
CORNING, CA

SHEET TITLE

PARTIAL FOUNDATION PLAN

DRAWING STATUS

CONSTRUCTION DOCUMENTS

REVISIONS

Sym.	Description	Date

Drawn By	NMR
Date Issued	2/13/2025
Scale	AS NOTED
Project No.	21-6497

SHEET No.

S210

Login Name: LanceriF
Plot Date: February 13, 2025 - 11:45 am
File Name: S:\Civil\21 Projects\21-6497 Tehama Co. Corning Vets Hall\02 DRW\S\21-6497 S210 FND\dwg
PAPER: 24"X36" | UTIL: 1.4:0.31 | LWT: 0.00 | STYLE: CONFIG

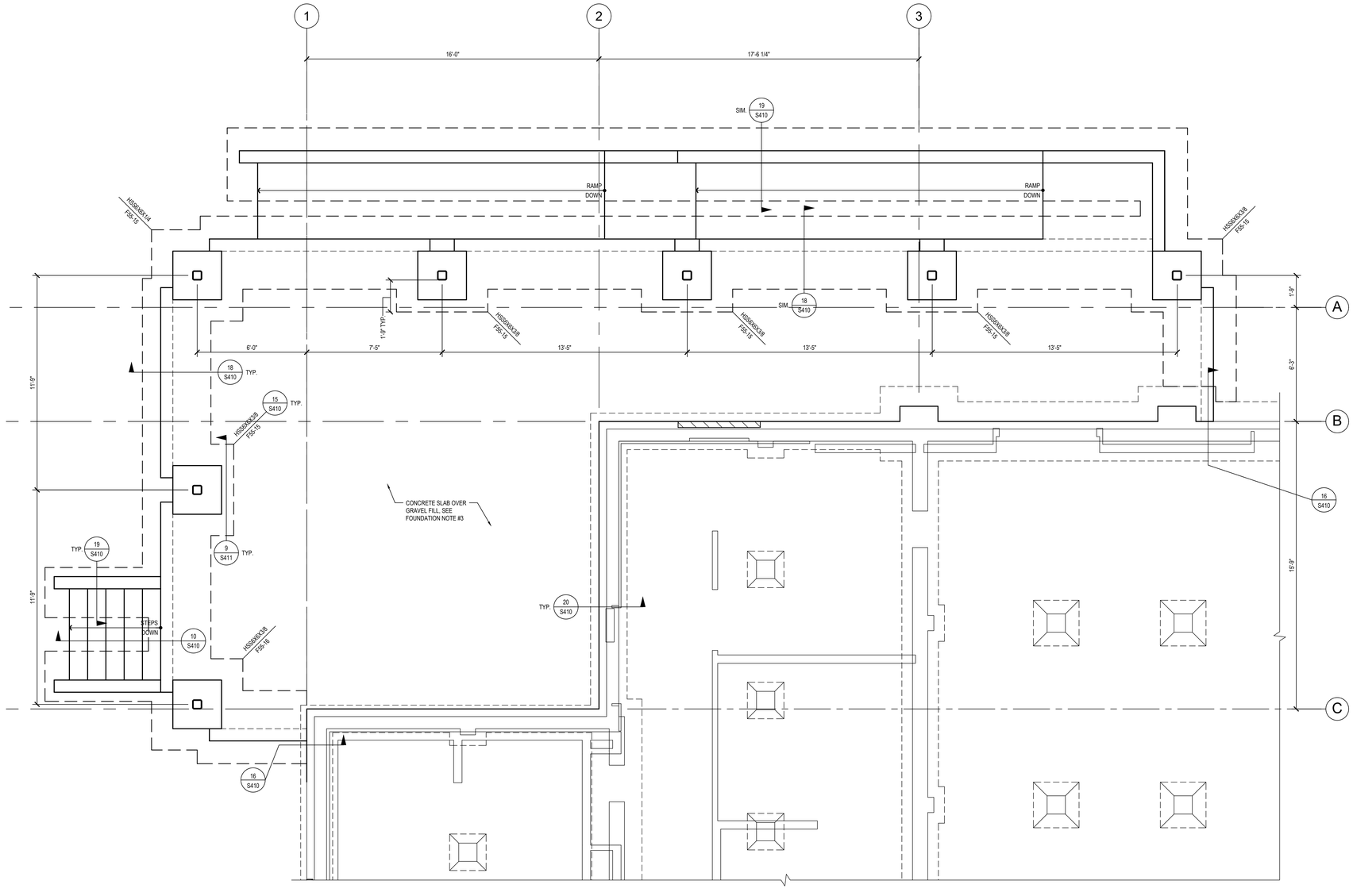

PARTIAL FOUNDATION PLAN

SCALE: 3/8" = 1'-0"

FOUNDATION NOTES

1. SEE GENERAL STRUCTURAL NOTES ON SHEET S110 FOR ADDITIONAL INFORMATION.
2. SEE ARCH FOR ALL DIMENSIONS & ELEVATIONS.
3. TYPICAL SLAB ON GRADE TO BE 4" THICK, REINFORCED W/ #3 @ 16" O.C. LOCATED 1" CLEAR FROM TOP OF SLAB, OVER FREE DRAINING GRAVEL. SEE SHEET S410 FOR TYPICAL FOUNDATION DETAILS.
4. INDICATES (E) 6X8 POST
   INDICATES (E) TAPERED CONCRETE PIERS
5. INDICATES (E) CONCRETE FOOTING AND STEM WALL
   INDICATES (E) BRICK
   INDICATES (E) FLOOR JOIST, SEE PLAN
   INDICATES (E) FLOOR GIRDER, SEE PLAN
   INDICATES CONCRETE FOOTING AND WALL
4. INDICATES COLUMN SIZE, SEE PLAN
   INDICATES FOOTING SIZE, SEE SCHEDULE
   HSS3X3X1/4 F22-15
   INDICATES POST
   INDICATES CONC. PEDESTAL
   INDICATES SPREAD FOOTING. SEE 15/S410 FOR MORE INFO.

SPREAD FOOTING SCHEDULE

MARK	WIDTH "B"	DEPTH "D"	REINFORCEMENT
F55-15	5'-0" SQ.	15"	6- #5 EA. WAY T.&B.
F5.335.33-15	5'-4" SQ.	15"	6- #5 EA. WAY T.&B.

Copyright © 2025
All ideas, designs, arrangements and plans indicated or represented by this drawing are owned by, and the property of, NICHOLS, MELBURG and ROSSETTO and were created, evolved and developed for use on, and in conjunction with, the specified project. None of such ideas, designs, arrangements and plans shall be used by or disclosed to any person, firm or corporation for any purpose whatsoever without the written permission of NICHOLS, MELBURG and ROSSETTO.

NICHOLS MELBURG ROSSETTO
ARCHITECTS + ENGINEERS
300 KNOLLCREST DRIVE
REDDING, CA. 96002
(530) 222-3300 (530) 222-3538 FAX
http://www.nmrdesign.com

CONSULTANTS

STRUCTURAL ENGINEERING
555 MAIN STREET, STE. 300
CHICO, CA. 95928
(530) 891-1710 (530) 891-0138 FAX
https://nmrdesign.com

LICENSE STAMPS

REGISTERED PROFESSIONAL ENGINEER
EDWARD V. FISHER
No. 3016
EXP. 6-30-25
STRUCTURAL
STATE OF CALIFORNIA

PROJECT NAME

TEHAMA COUNTY
CORNING
VETERAN'S HALL

1620 SOLANO ST.
CORNING, CA

SHEET TITLE

PARTIAL FOUNDATION PLAN

DRAWING STATUS

CONSTRUCTION DOCUMENTS

REVISIONS

Sym.	Description	Date

Drawn By	NMR
Date Issued	2/13/2025
Scale	AS NOTED
Project No.	21-6497

SHEET No.

S211

Logo Name: LicensF
Plot Date: February 13, 2025 - 11:45 am
File Name: S:\Docs\21 Projects\21-6497 Tehama Co. Corning Vets Hall\02 DRWG\S21-6497 S210 FND\N.dwg
PAPER: 24"x36" | UTIL: 1X1=0.5 | 1X1=0.5 | 1X1=0.5

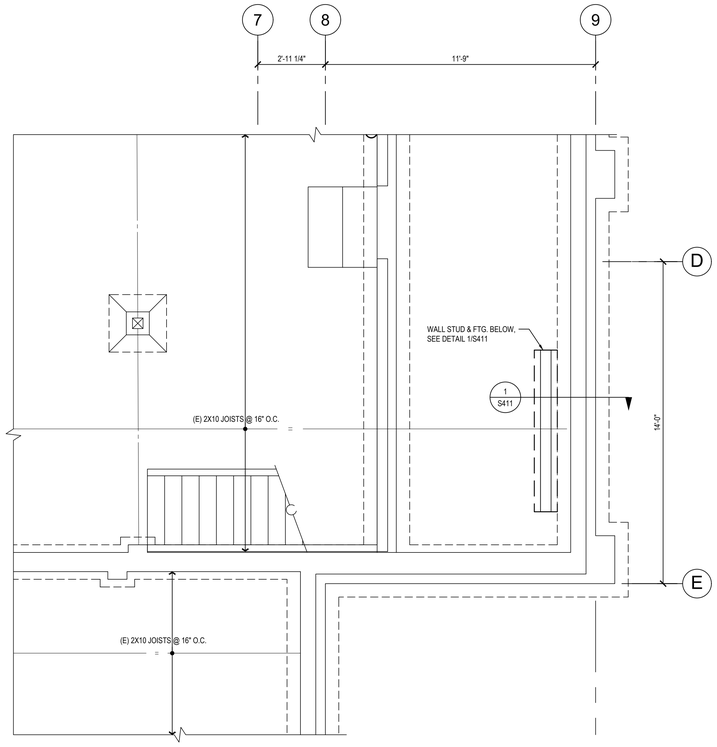

PARTIAL FOUNDATION AND FLOOR FRAMING PLAN

SCALE: 3/8" = 1'-0"

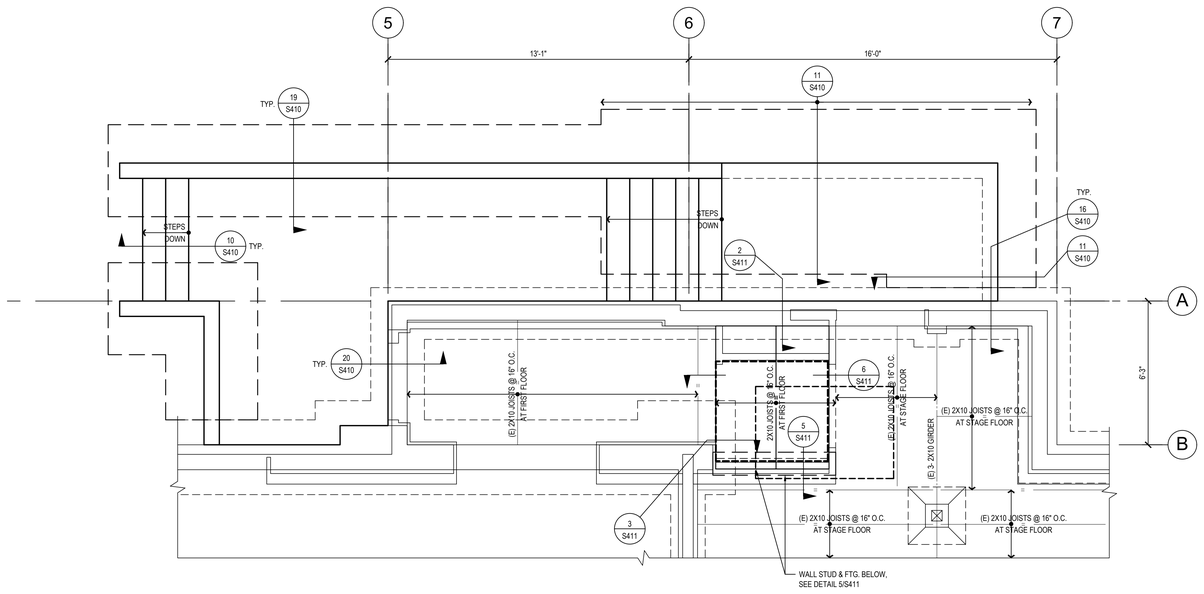

PARTIAL FOUNDATION AND FLOOR FRAMING PLAN

SCALE: 3/8" = 1'-0"

FOUNDATION NOTES

1. SEE GENERAL STRUCTURAL NOTES ON SHEET S110 FOR ADDITIONAL INFORMATION.
2. SEE ARCH FOR ALL DIMENSIONS & ELEVATIONS.
3. TYPICAL SLAB ON GRADE TO BE 4" THICK, REINFORCED W/ #3 @ 16" O.C. LOCATED 1" CLEAR FROM TOP OF SLAB, OVER FREE DRAINING GRAVEL. SEE SHEET S410 FOR TYPICAL FOUNDATION DETAILS.
4. INDICATES (E) 6X8 POST
   INDICATES (E) TAPERED CONCRETE PIERS
5. INDICATES (E) CONCRETE FOOTING AND STEM WALL
   INDICATES (E) BRICK
   INDICATES (E) FLOOR JOIST, SEE PLAN
   INDICATES (E) FLOOR GIRDER, SEE PLAN
   INDICATES CONCRETE FOOTING AND WALL
4. INDICATES COLUMN SIZE, SEE PLAN
   INDICATES FOOTING SIZE, SEE SCHEDULE
   HSS5X5X1/4
   F22-15
   INDICATES POST
   INDICATES SPREAD FOOTING. SEE 15/S410 FOR MORE INFO.

SPREAD FOOTING SCHEDULE

MARK	WIDTH "B"	DEPTH "D"	REINFORCEMENT
F55-15	5'-0" SQ.	15"	6- #5 EA. WAY T.&B.
F5.335.33-15	5'-4" SQ.	15"	6- #5 EA. WAY T.&B.

Copyright © 2025
All ideas, designs, arrangements and plans indicated or represented by this drawing are owned by, and the property of, NICHOLS, MELBURG and ROSSETTO and were created, evolved and developed for use on, and in conjunction with, the specified project. None of such ideas, designs, arrangements and plans shall be used by or disclosed to any person, firm or corporation for any purpose whatsoever without the written permission of NICHOLS, MELBURG and ROSSETTO.

NICHOLS MELBURG & ROSSETTO
ARCHITECTS + ENGINEERS
300 KNOLLCREST DRIVE
REDDING, CA. 96002
(530) 222-3300 (530) 222-3538 FAX
http://www.nmrdesign.com

CONSULTANTS

STRUCTURAL ENGINEERING
555 MAIN STREET, STE. 300
CHICO, CA. 95928
(530) 891-1710 (530) 891-0138 FAX
https://nmrdesign.com

LICENSE STAMPS

REGISTERED PROFESSIONAL ENGINEER
EDWARD V. FLAKE
No. 3000
EXP. 6-30-25
STRUCTURAL
STATE OF CALIFORNIA

PROJECT NAME

TEHAMA COUNTY
CORNING
VETERAN'S HALL

1620 SOLANO ST.
CORNING, CA

SHEET TITLE

PARTIAL FOUNDATION & FLOOR FRAMING PLANS

DRAWING STATUS

CONSTRUCTION DOCUMENTS

REVISIONS

Sym.	Description	Date

Drawn By	VR
Date Issued	2/13/2025
Scale	AS NOTED
Project No.	21-6497

SHEET No.

S212

Login Name: LaprairieF
Plot Date: February 13, 2025 - 11:47 am
File Name: S:\Work\21 Projects\21-6497 Tehama Co. Corning Vets Hall\02 DRW\S\S212-6497 S210 FND\N.dwg
XREFS: X-FNDN1 | X-TITL | X-REF1 | X-REF2 | X-CVR (PB2)

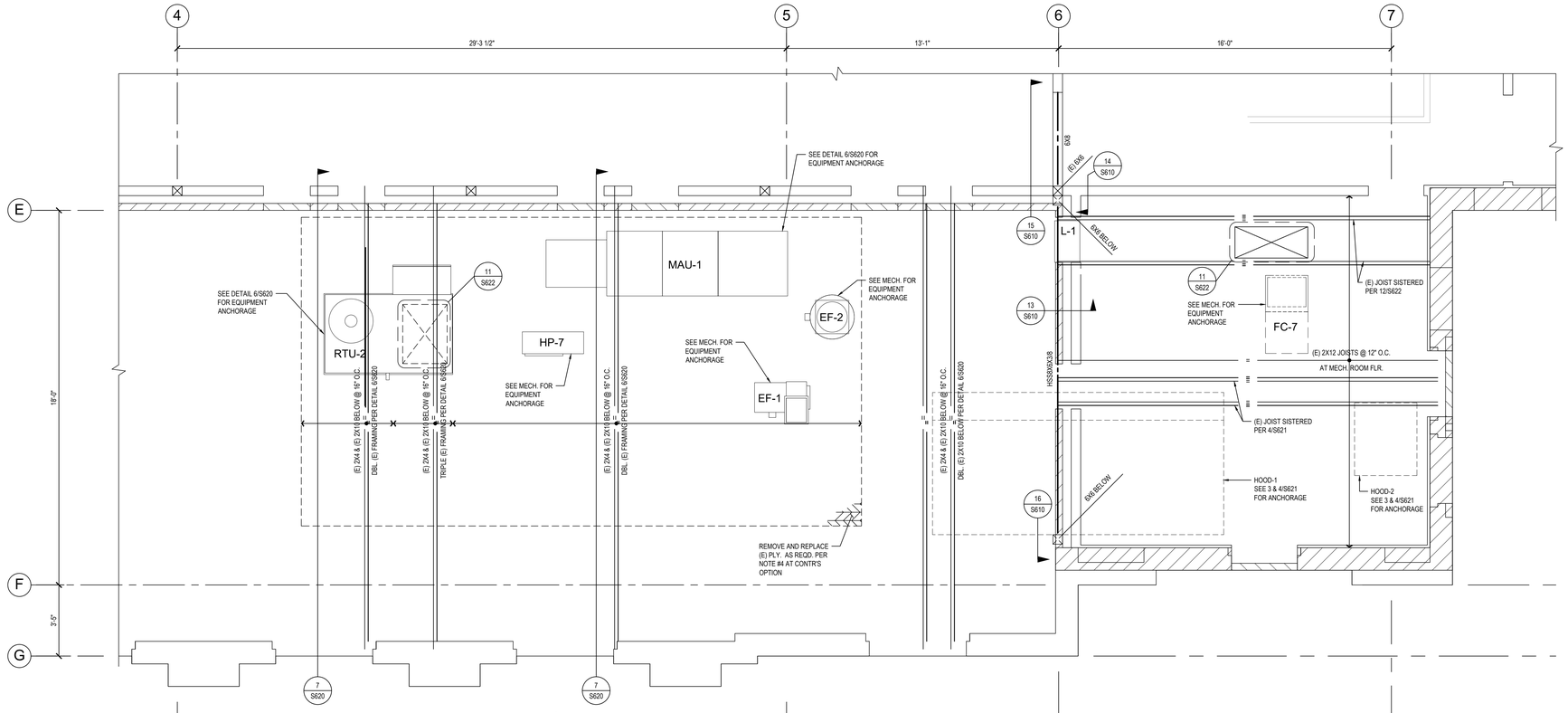

PARTIAL LOW ROOF FRAMING PLAN

SCALE: 3/8" = 1'-0"

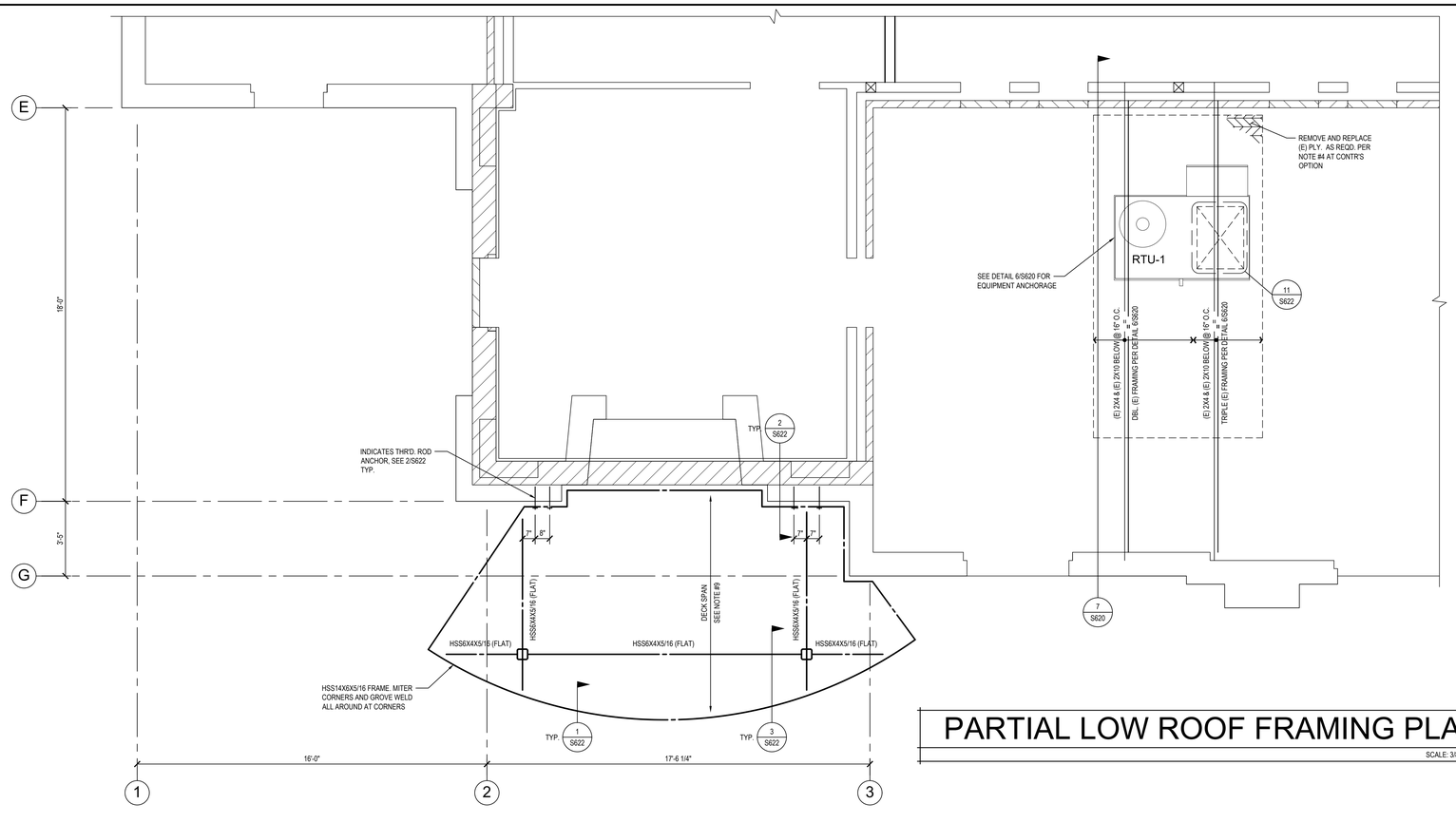

PARTIAL LOW ROOF FRAMING PLAN

SCALE: 3/8" = 1'-0"

LOW ROOF FRAMING NOTES

1. SEE SHEET S110 FOR GENERAL STRUCTURAL NOTES. SEE ARCH. & MECH. DRAWINGS FOR SIZE AND LOCATION OF ALL PENETRATIONS.
2. COORDINATE ALL HVAC MECHANICAL UNIT SIZES AND LOCATIONS WITH ARCH. & MECH. DRAWINGS.
3. SEE SHEET S110 FOR DESIGN LOADS.
4. ROOF SHEATHING TO BE EXP. 1 APA RATED SHTG. TO MATCH THICKNESS OF (E) ROOF SHT'G., UNBLOCKED, NAILED W/ 10ds @ 6" O.C. E.N. & 12" O.C. F.N. SEE DIAPHRAGM NAILING DETAIL 2/S610 & 2/S620 FOR ROOF SHEATHING ATTACHMENT REQUIREMENTS.
5. 6X — INDICATES POST WIDTH. DEPTH & MATERIAL TO MATCH WALL FRAMING
   — INDICATES POST.
6. INDICATES (E) JOIST, SEE PLAN
   INDICATES JOIST OR G/N/ TRUSS, SEE PLAN
   INDICATES BEAM, SEE PLAN
7. WALL LEGEND
   INDICATES WOOD STUD WALL, U.O.N.
   INDICATES (E) BRICK WALL, U.O.N.
8. ROOF SHEATHING TO BE 15/32" EXP. 1 RATED SHT'G., UNBLOCKED W/ A SPAN RATING 40/20 NAILED W/ 10d's @ E.N. & @ 12" O.C. F.N., SEE 2/S610 FOR ADD'L. INFORMATION
9. 18 GA. ASC DGB-36 GALVANIZED METAL DECK. DELTA GRIP SIDE LAPS @ 36" O.C. PROVIDE 3/4"Ø (1/2" NET) PUDDLE WELDS @ 24" O.C. AT SUPPORTS PARALLEL TO FLUTES AND 36/7 PATTERN PER SHEET AT SUPPORTS PERPENDICULAR TO FLUTES. SEE DECK FASTENING PATTERN BELOW FOR PUDDLE WELDS PER SHEET AT SUPPORTS PERPENDICULAR TO FLUTES. INSTALL PER REQUIREMENTS IN IAPMO REPORT ER-0161.

   DECK FASTENING PATTERN:

   36/7 PATTERN — ROOF DECK — 3/4"Ø PUDDLE WELD, TYP.
10. BOTTOM OF HSS STEEL BEAMS TO BE +8'-0" ABOVE (E) 1ST FLOOR LEVEL

Copyright © 2025
All ideas, designs, arrangements and plans indicated or represented by this drawing are owned by, and the property of, NICHOLS, MELBURG and ROSSETTO and were created, evolved and developed for use on, and in conjunction with, the specified project. None of such ideas, designs, arrangements and plans shall be used, or disclosed to any person, firm or corporation for any purpose whatsoever without the written permission of NICHOLS, MELBURG and ROSSETTO.

NICHOLS MELBURG & ROSSETTO
ARCHITECTS + ENGINEERS
555 MAIN STREET, STE. 300
CHICO, CA. 95928
(530) 892-3200 (530) 892-0538 FAX
http://www.nmrdesign.com

CONSULTANTS

STRUCTURAL ENGINEERING
555 MAIN STREET, STE. 300
CHICO, CA. 95928
(530) 891-1710 (530) 891-0138 FAX
https://nmrdesign.com

LICENSE STAMPS

REGISTERED PROFESSIONAL ENGINEER — EDWARD V. T. LEE — No. 3000 — EXP. 6-30-25 — STRUCTURAL — STATE OF CALIFORNIA

PROJECT NAME

TEHAMA COUNTY
CORNING
VETERAN'S HALL

1620 SOLANO ST.
CORNING, CA

SHEET TITLE

PARTIAL LOW ROOF FRAMING PLAN

DRAWING STATUS

CONSTRUCTION DOCUMENTS

REVISIONS

Sym.	Description	Date

Drawn By	VR
Date Issued	2/13/2025
Scale	AS NOTED
Project No.	21-6497

SHEET No.

S220

Login Name: LeonardF
Plot Date: February 13, 2025 - 11:49 am
File Name: S:\Source\21-Projects\21-6497 Tehama Co Corning Vets Hall\02. DWG\S220-LWRF.dwg
Xrefs: X:\TITLE-PAGE\EBD-PAGE\11 X-CONTROL\EBD

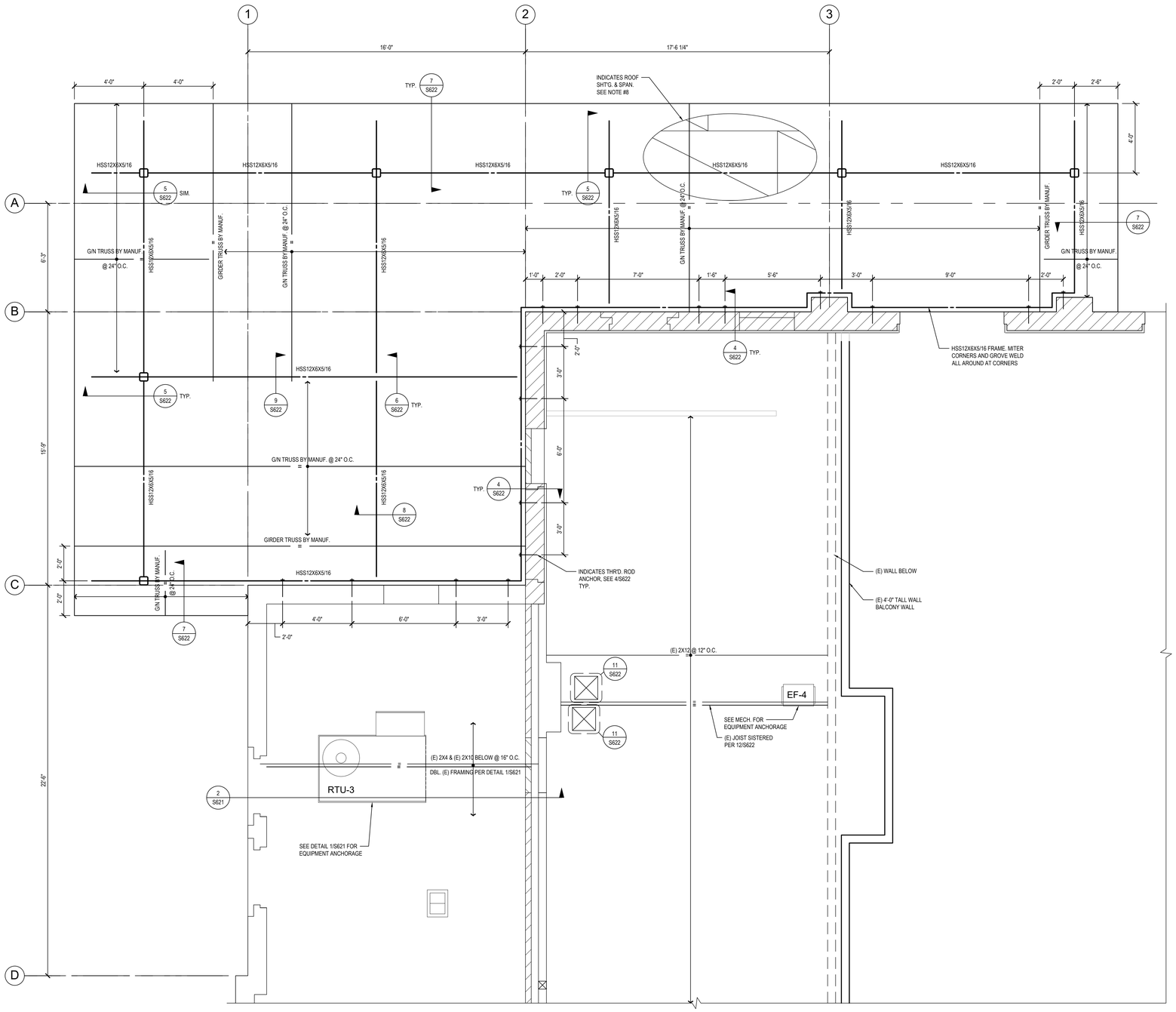

PARTIAL LOW ROOF FRAMING PLAN

SCALE: 3/8" = 1'-0"

LOW ROOF FRAMING NOTES

1. SEE SHEET S110 FOR GENERAL STRUCTURAL NOTES. SEE ARCH. & MECH. DRAWINGS FOR SIZE AND LOCATION OF ALL PENETRATIONS.
2. COORDINATE ALL HVAC MECHANICAL UNIT SIZES AND LOCATIONS WITH ARCH. & MECH. DRAWINGS.
3. SEE SHEET S110 FOR DESIGN LOADS.
4. ROOF SHEATHING TO BE EXP. 1 APA RATED SHTG. TO MATCH THICKNESS OF (E) ROOF SHT'G., UNBLOCKED, NAILED W/ 10ds @ 6" O.C. E.N. & 12" O.C. F.N. SEE DIAPHRAGM NAILING DETAIL 2/S610 & 2/S620 FOR ROOF SHEATHING ATTACHMENT REQUIREMENTS.
5. INDICATES POST WIDTH. DEPTH & MATERIAL TO MATCH WALL FRAMING
   INDICATES POST.
6. INDICATES (E) JOIST, SEE PLAN
   INDICATES JOIST OR G/N TRUSS, SEE PLAN
   INDICATES BEAM, SEE PLAN
7. WALL LEGEND
   INDICATES WOOD STUD WALL, U.O.N.
   INDICATES (E) BRICK WALL, U.O.N.
8. ROOF SHEATHING TO BE 15/32" EXP. 1 RATED SHT'G., UNBLOCKED W/ A SPAN RATING 40/20 NAILED W/ 10d's @ E.N. & @ 12" O.C. F.N., SEE 2/S610 FOR ADD'L. INFORMATION
9. 18 GA. ASC DGB-36 GALVANIZED METAL DECK. DELTA GRIP SIDE LAPS @ 36" O.C. PROVIDE 3/4"Ø (1/2" NET) PUDDLE WELDS @ 24" O.C. AT SUPPORTS PARALLEL TO FLUTES AND 36/7 PATTERN PER SHEET AT SUPPORTS PERPENDICULAR TO FLUTES. SEE DECK FASTENING PATTERN BELOW FOR PUDDLE WELDS PER SHEET AT SUPPORTS PERPENDICULAR TO FLUTES. INSTALL PER REQUIREMENTS IN IAPMO REPORT ER-0161.

   DECK FASTENING PATTERN:

   36/7 PATTERN — 3/4"Ø PUDDLE WELD, TYP. — ROOF DECK
10. BOTTOM OF HSS STEEL BEAMS TO BE +8'-0" ABOVE (E) 1ST FLOOR LEVEL

Copyright © 2025
All ideas, designs, arrangements and plans indicated or represented by this drawing are owned by, and the property of, NICHOLS, MELBURG and ROSSETTO and were created, evolved and developed for use on, and in conjunction with, the specified project. None of such ideas, designs, arrangements and plans shall be used, or disclosed to any person, firm or corporation for any purpose whatsoever without the written permission of NICHOLS, MELBURG and ROSSETTO.

NICHOLS MELBURG & ROSSETTO
ARCHITECTS + ENGINEERS
555 MAIN STREET, STE. 300
CHICO, CA. 95928
(530) 892-3200 (530) 892-0538 FAX
http://www.nmrdesign.com

CONSULTANTS

STRUCTURAL ENGINEERING
555 MAIN STREET, STE. 300
CHICO, CA. 95928
(530) 891-1710 (530) 891-0138 FAX
https://nmrdesign.com

LICENSE STAMPS

REGISTERED PROFESSIONAL ENGINEER — LEONARD V. FISKE — No. 1[illegible] — EXP. 12-30-25 — STRUCTURAL — STATE OF CALIFORNIA

PROJECT NAME

TEHAMA COUNTY
CORNING
VETERAN'S HALL

1620 SOLANO ST.
CORNING, CA

SHEET TITLE

PARTIAL LOW ROOF FRAMING PLAN

DRAWING STATUS

CONSTRUCTION DOCUMENTS

REVISIONS

Sym.	Description	Date

Drawn By	VR
Date Issued	2/13/2025
Scale	AS NOTED
Project No.	21-6497

SHEET No.

S221

Login Name: LeonardF
Plot Date: February 13, 2025 - 11:59 am
File Name: S:\Share\21 Projects\21-6497 Tehama Co. Corning Vets Hall\02 DRAWINGS\21-6497 S220S221LWRF.dwg
PROTECTED WITH LANDESIGN SECURITY. 1-800-877-5263

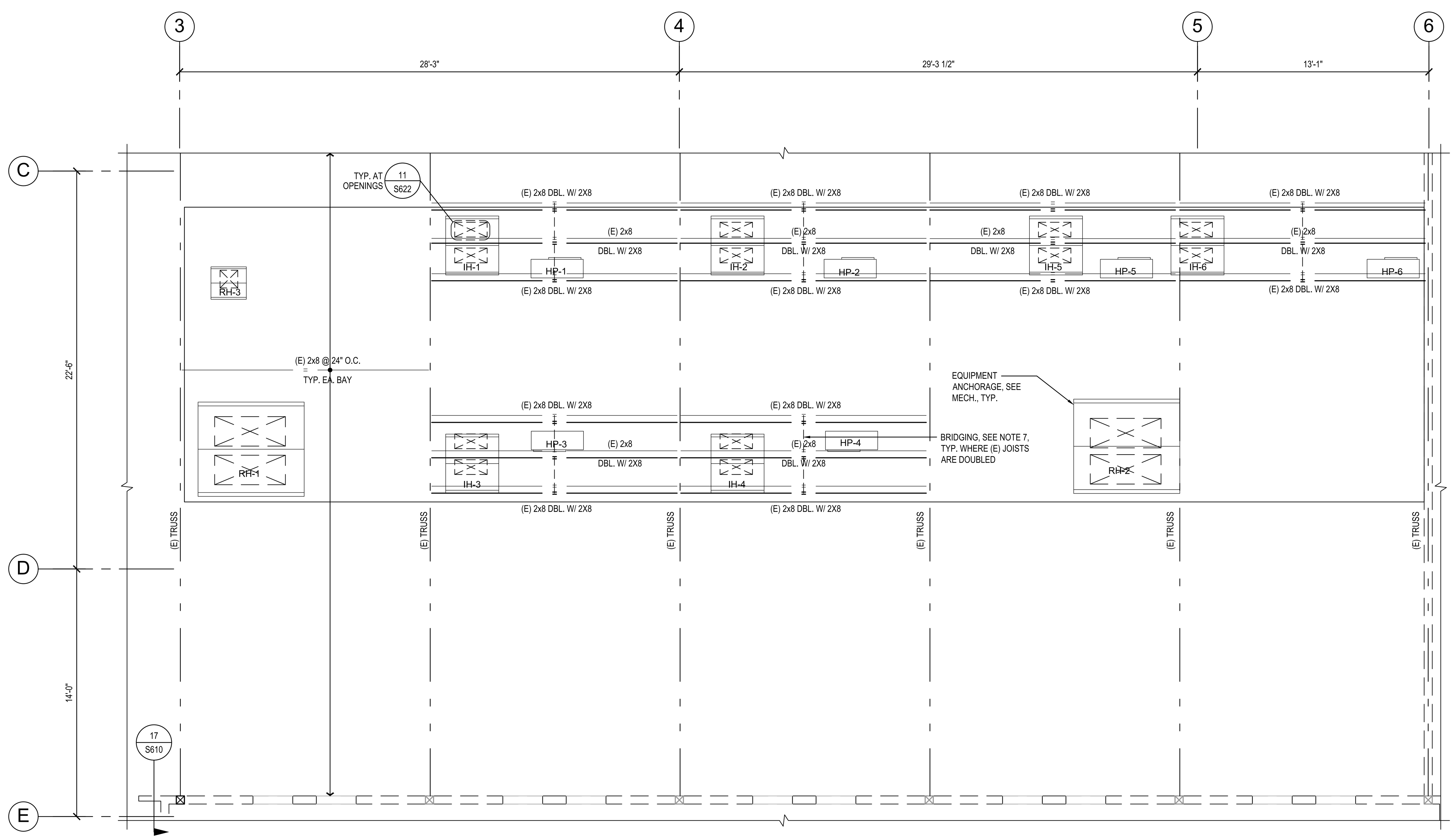

PARTIAL HIGH ROOF FRAMING PLAN

SCALE: 1/4" = 1'-0"

ROOF FRAMING NOTES

1. SEE SHEET S110 FOR GENERAL STRUCTURAL NOTES. SEE ARCH. & MECH. DRAWINGS FOR SIZE AND LOCATION OF ALL ROOF PENETRATIONS.
2. SEE SHEET S110 FOR DESIGN LOADS.
3. ⊠———— INDICATES POST.
4. = = = = = = = = INDICATES BEARING WALL BELOW ROOF LEVEL.
5. ——— - - ——— INDICATES ROOF TRUSS, SEE PLAN
6. ——— = ——— INDICATES ROOF JOIST, SEE PLAN
7. PROVIDE MID-SPAN BLOCKING WHERE (E) BRIDGING IS REMOVED TO DOUBLE (E) JOISTS WHERE SHOWN ON PLAN.
8. COORDINATE ALL HVAC MECHANICAL UNIT SIZES AND LOCATIONS WITH ARCH. & MECH. DRAWINGS.

Copyright © 2025

All ideas, designs, arrangements and plans indicated or represented by this drawing are owned by, and the property of, NICHOLS, MELBURG and ROSSETTO and were created, evolved and developed for use on, and in conjunction with, the specified project. None of such ideas, designs, arrangements or plans shall be used by, or disclosed to any person, firm or corporation for any purpose whatsoever without the written permission of NICHOLS, MELBURG and ROSSETTO.

NICHOLS MELBURG & ROSSETTO
ARCHITECTS + ENGINEERS
300 KNOLLCREST DRIVE
REDDING, CA. 96002
(530) 222-3300 (530) 222-3538 FAX
http://www.nmrdesign.com

CONSULTANTS

STRUCTURAL ENGINEERING
555 MAIN STREET, STE. 300
CHICO, CA. 95928
(530) 891-1710 (530) 891-0138 FAX
https://nmrdesign.com

LICENSE STAMPS

REGISTERED PROFESSIONAL ENGINEER
LEONARD V. FISHER
No. 6139
EXP. 9-30-25
STRUCTURAL
STATE OF CALIFORNIA

PROJECT NAME

TEHAMA COUNTY CORNING VETERAN'S HALL

1620 SOLANO ST.
CORNING, CA

SHEET TITLE

PARTIAL HIGH ROOF FRAMING PLAN

DRAWING STATUS

CONSTRUCTION DOCUMENTS

REVISIONS

Sym.	Description	Date

Drawn By	VR
Date Issued	2/13/2025
Scale	AS NOTED
Project No.	21-6497

SHEET No.

S230

Login Name: LeonardF
Plot Date: February 13, 2025 - 11:51 am
File Name: S:\Swork\21 Projects\21-6497 Tehama Co Corning Vets Hall\02 DRWGS\21-6497 S230 ROOF.dwg
XREFS: X-TITL ¦ X-FLR2 ¦ X-ROOF ¦ X-GRID ¦ x-CVH-GRID ¦ x-CVH-flr2

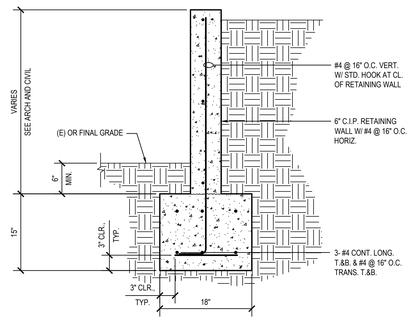

PLANTER FOOTING AND WALL SECTION (17)
SCALE: 1 = 1'-0"

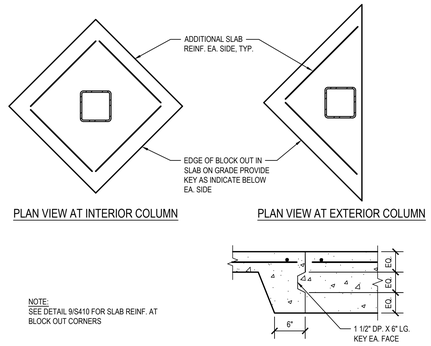

TYPICAL SLAB ON GRADE BLOCK OUT (13)
N.T.S.

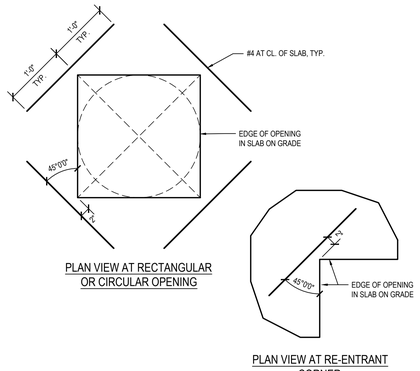

TYPICAL REINFORCING AT OPENINGS AND RE-ENTRANT CORNERS IN SLABS (9)
N.T.S.

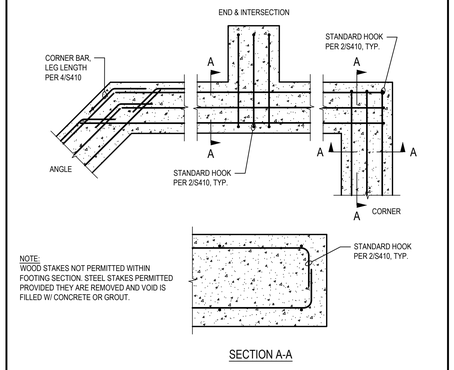

TYPICAL CONCRETE FOUNDATION (5)
N.T.S.

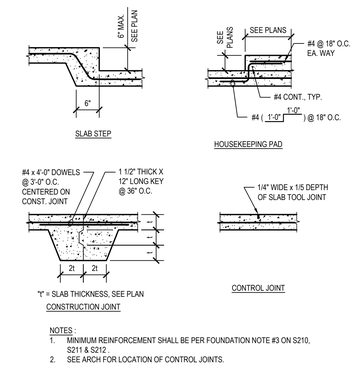

NOTES :
1. MINIMUM REINFORCEMENT SHALL BE PER FOUNDATION NOTE #3 ON S210, S211 & S212 .
2. SEE ARCH FOR LOCATION OF CONTROL JOINTS.

TYPICAL SLAB ON GRADE DETAILS (1)
N.T.S.

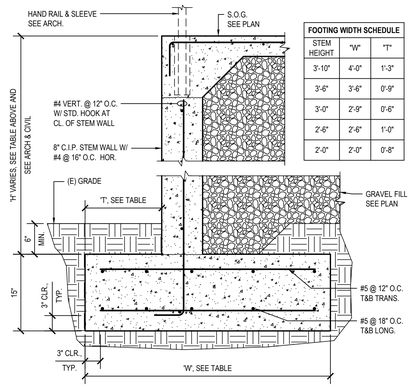

FOOTING WIDTH SCHEDULE		
STEM HEIGHT	"W"	"T"
3'-10"	4'-0"	1'-3"
3'-6"	3'-6"	0'-9"
3'-0"	2'-9"	0'-6"
2'-6"	2'-6"	1'-0"
2'-0"	2'-0"	0'-8"

PATIO FOOTING AND WALL SECTION (18)
SCALE: 1 = 1'-0"

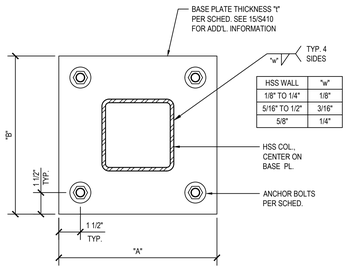

HSS WALL	"w"
1/8" TO 1/4"	1/8"
5/16" TO 1/2"	3/16"
5/8"	1/4"

BASE PLATE SCHEDULE

COLUMN SIZE	"t"	"A"	"B"	ANCHOR BOLTS
HSS6X6	1/2"	12"	12"	4- 5/8" DIA. X 7 1/2" EMBED

BASE PLATE DETAIL (14)
N.T.S.

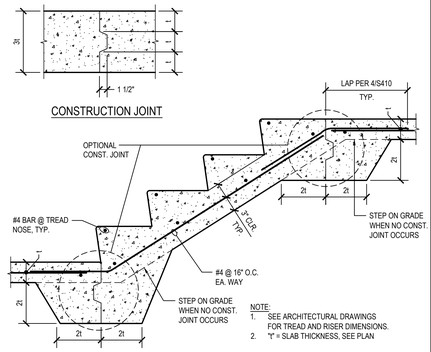

NOTE:
1. SEE ARCHITECTURAL DRAWINGS FOR TREAD AND RISER DIMENSIONS.
2. "t" = SLAB THICKNESS, SEE PLAN

TYPICAL STEPS ON GRADE (10)
N.T.S.

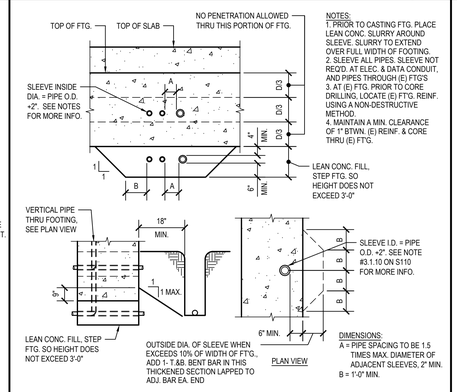

NOTES:
1. PRIOR TO CASTING FTG. PLACE LEAN CONC. SLURRY AROUND SLEEVE. SLURRY TO EXTEND OVER FULL WIDTH OF FOOTING.
2. SLEEVE ALL PIPES. SLEEVE NOT REQ'D. AT ELEC. & DATA CONDUIT, AND PIPES THROUGH (E) FTG'S
3. AT (E) FTG. PRIOR TO CORE DRILLING, LOCATE (E) FTG. REINF. USING A NON-DESTRUCTIVE METHOD.
4. MAINTAIN A MIN. CLEARANCE OF 1" BTWN. (E) REINF. & CORE THRU (E) FTG.

DIMENSIONS:
A = PIPE SPACING TO BE 1.5 TIMES MAX. DIAMETER OF ADJACENT SLEEVES, 2" MIN.
B = 1'-0" MIN.

TYPICAL PIPE THROUGH FOOTING (6)
N.T.S.

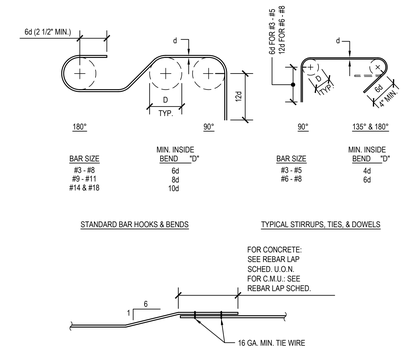

STANDARD REBAR HOOKS AND BENDS (2)
N.T.S.

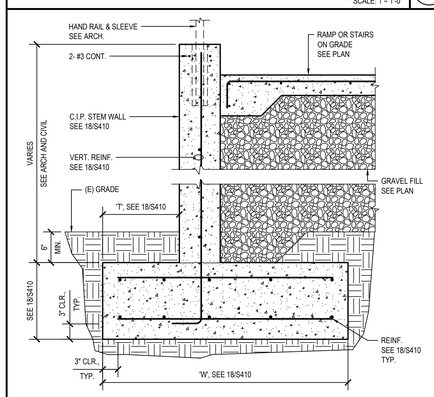

FOOTING AND STEM WALL AT RAMP & STAIRS SECTION (19)
SCALE: 1 = 1'-0"

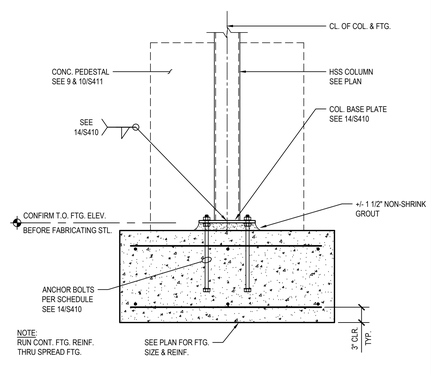

SPREAD FOOTING DETAIL (15)
N.T.S.

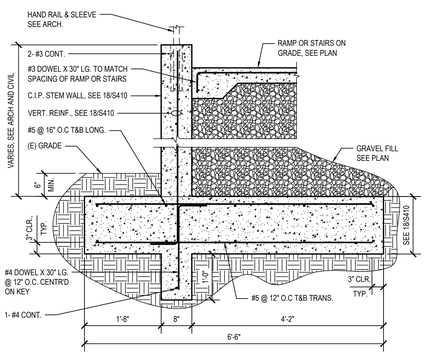

FOOTING AND STEM WALL AT RAMP AND STAIRS BY STAGE - SECTION (11)
SCALE: 3/4" = 1'-0"

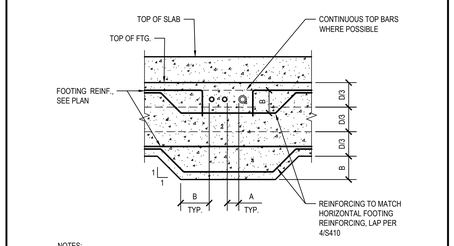

NOTES:
SEE DETAIL 6/S410 FOR SLEEVE REQUIREMENTS.

DIMENSIONS:
A = PIPE SPACING TO BE 1.5 TIMES MAXIMUM DIAMETER OF ADJACENT SLEEVES, 2" MIN.
B = 1'-0" MINIMUM

PIPE THROUGH FOOTING ABOVE ABOVE MIDDLE THIRD (7)
N.T.S.

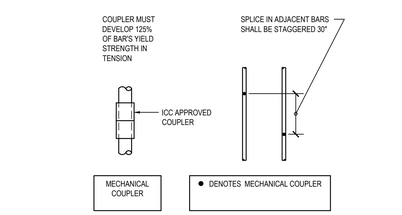

ALTERNATE REBAR SPLICES (3)
N.T.S.

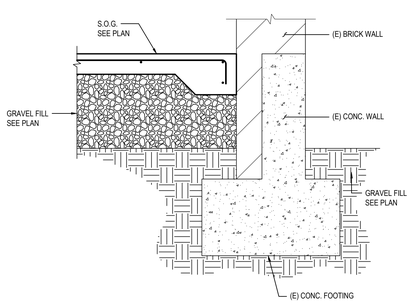

PATIO SECTION AT EXISTING WALL (20)
N.T.S.

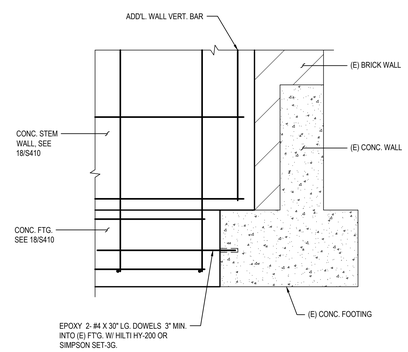

FOOTING PERPENDICULAR TO EXISTING FOOTING (16)
SCALE: 1 = 1'-0"

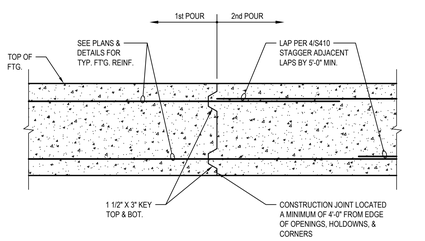

NOTE:
CONTRACTOR TO SUBMIT CONSTRUCTION JOINT LAYOUT TO STRUCTURAL ENGINEER FOR REVIEW AT LEAST 48 HOURS PRIOR TO PLACEMENT OF CONCRETE.

CONSTRUCTION JOINT IN FOOTING (12)
N.T.S.

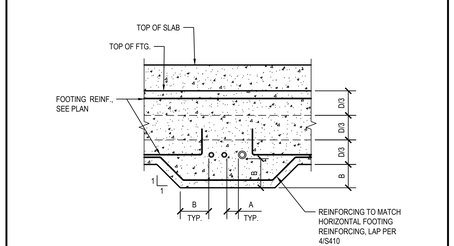

NOTES:
SEE DETAIL 6/S410 FOR SLEEVE REQUIREMENTS.

DIMENSIONS:
A = PIPE SPACING TO BE 1.5 TIMES MAXIMUM DIAMETER OF ADJACENT SLEEVES, 2" MIN.
B = 1'-0" MINIMUM

PIPE THROUGH FOOTING BELOW MIDDLE THIRD (8)
N.T.S.

TYP. REBAR LAP LENGTH

BAR SIZE	2500	3000
	60	60
#3	32	29
	24	23
#4	42	38
	32	29
#5	51	47
	39	37
#6	62	56
	47	43
#7	90	82
	69	63
#8	102	94
	78	72
#9	115	106
	89	81
#10	130	119
	101	91
#11	143	132
	111	102

CONC. STRENGTH "f'c" IN PSI
BAR GRADE (KSI)
TOP BARS PER NOTE 2, TYP. (IN.)
OTHER BARS, TYP. (IN.)

NOTES:
1. INCREASE LAP LENGTHS 33% FOR LIGHT WEIGHT CONCRETE, AND AT FOUR BAR BUNDLES.
2. TOP BARS - HORIZONTAL BARS PLACED WITH MORE THAN 12" OF FRESH CONC. CAST IN THE MEMBER BELOW THE BARS.
3. SEE CONCRETE SECTION NOTES ON SHEET S110 FOR CONCRETE STRENGTHS.
4. LAP LENGTHS ARE BASED ON CLEAR SPACING OF BARS NOT LESS THAN 2 BAR DIAMETERS AND CLEAR COVER NOT LESS THAN 1 BAR DIAMETER.

REBAR LAP SCHEDULE (4)
N.T.S.

Copyright © 2025
All ideas, designs, arrangements and plans indicated or represented by this drawing are owned by, and the property of, NICHOLS, MELBURG and ROSSETTO and were created, evolved and developed for use on, and in conjunction with, the specified project. None of such ideas, designs, arrangements and plans shall be used, or disclosed to any person, firm or corporation for any purpose whatsoever without the written permission of NICHOLS, MELBURG and ROSSETTO.

NICHOLS MELBURG & ROSSETTO
ARCHITECTS + ENGINEERS
300 KNOLLCREST DRIVE
REDDING, CA. 96002
(530) 222-3300 (530) 222-3538 FAX
http://www.nmrdesign.com
CONSULTANTS

STRUCTURAL ENGINEERING
555 MAIN STREET, STE. 300
CHICO, CA. 95928
(530) 891-1710 (530) 891-0138 FAX
https://nmrdesign.com

LICENSE STAMPS

REGISTERED PROFESSIONAL ENGINEER
LEONARD V. FLAKE
No. 30
EXP. 6-30-25
STRUCTURAL
STATE OF CALIFORNIA

PROJECT NAME

TEHAMA COUNTY
CORNING
VETERAN'S HALL

1620 SOLANO ST.
CORNING, CA

SHEET TITLE

TYPICAL FOUNDATION DETAILS & SECTIONS

DRAWING STATUS

CONSTRUCTION DOCUMENTS

REVISIONS

Sym.	Description	Date

Drawn By	NMR
Date Issued	2/13/2025
Scale	AS NOTED
Project No.	21-6497

SHEET No.

S410

Login Name: lanmnrF
Plot Date: February 13, 2025 - 1:52 am
File Name: S:\Work\21 Projects\21-6497 Tehama Co. Corning Vets Hall\02 DRW\S\S21-6497 S410 FDDT.dwg
Plot Scale: 0.1111

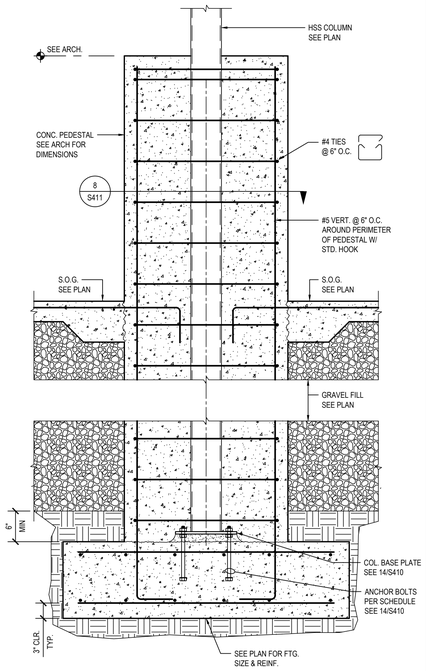

NOTE:
1. RUN CONT. FTG. REINF. THRU SPREAD FTG.
2. SEE 15/S410 FOR MORE INFORMATION

BACK ENTRY PEDESTAL SECTION (9)

SCALE: 1 = 1'-0"

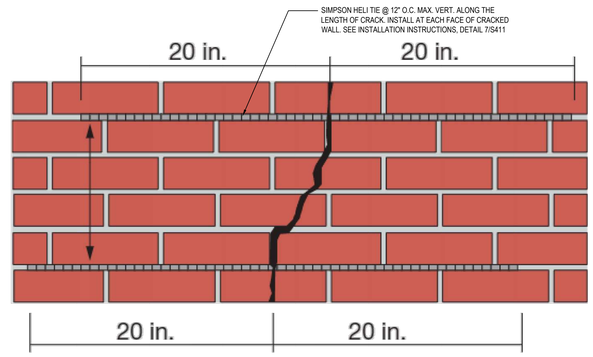

CRACK REPAIR DETAIL (4)

N.T.S.

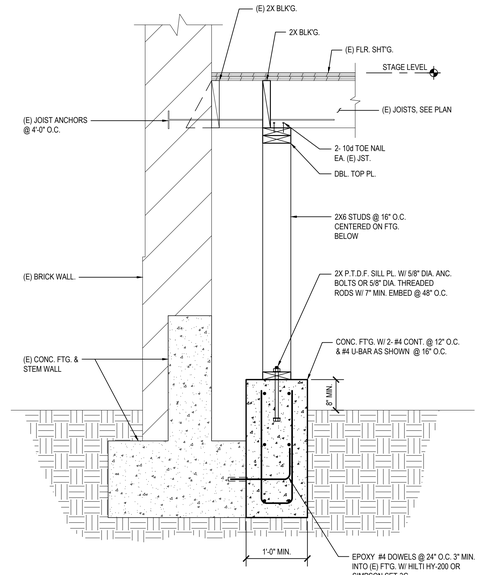

STAGE FLOOR JOIST REPAIR DETAIL (1)

SCALE: 1 = 1'-0"

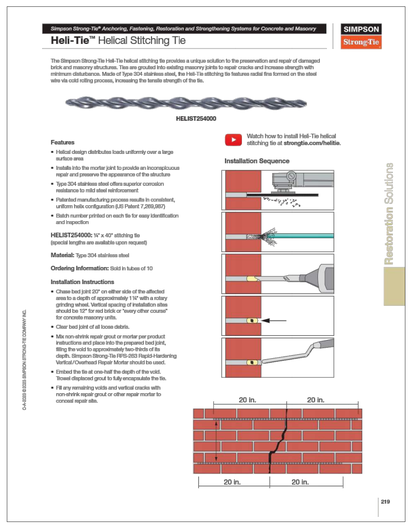
Simpson Strong-Tie® Anchoring, Fastening, Restoration and Strengthening Systems for Concrete and Masonry

SIMPSON Strong-Tie

Heli-Tie™ Helical Stitching Tie

The Simpson Strong-Tie Heli-Tie helical stitching tie provides a unique solution to the preservation and repair of damaged brick and masonry structures. Ties are grouted into existing masonry joints to repair cracks and increase strength with minimum obtrusiveness. Made of Type 304 stainless steel, the Heli-Tie stitching tie features radial fins formed on the steel wire via cold rolling process, increasing the tensile strength of the tie.

HELIST254000

Features
- Helical design distributes loads uniformly over a large surface area
- Installs into the mortar joint to provide an inconspicuous repair and preserves the appearance of the structure
- Type 304 stainless steel offers superior corrosion resistance to mild steel reinforcement
- Patented manufacturing process results in consistent, uniform helix configuration (US Patent 7,269,887)
- Batch number printed on each tie for easy identification and inspection

HELIST254000: W' x 40" stitching tie
(special lengths are available upon request)

Material: Type 304 stainless steel

Ordering Information: Sold in tubes of 10

Installation Instructions
- Chase bed joint 20" on either side of the affected area to a depth of approximately 1 ½" with a rotary grinding wheel. Vertical spacing of installation sites should be 12" for red brick or "every other course" for concrete masonry units.
- Clear bed joint of all loose debris.
- Mix non-shrink repair grout or mortar per product instructions and place into the prepared bed joint, filling the void to approximately two-thirds of its depth. Simpson Strong-Tie PRS-200 Rapid-Hardening Vertical/Overhead Repair Mortar should be used.
- Embed the tie at one-half the depth of the void. Trowel displaced grout to fully encapsulate the tie.
- Fill any remaining voids and vertical cracks with non-shrink repair grout or other repair mortar to conceal repair site.

Watch how to install Heli-Tie helical stitching tie at **strongtie.com/helitie.**

Installation Sequence

Restoration Solutions

20 in. 20 in. 20 in. 20 in.

219

HELI TIE INSTALLATION (7)

N.T.S.

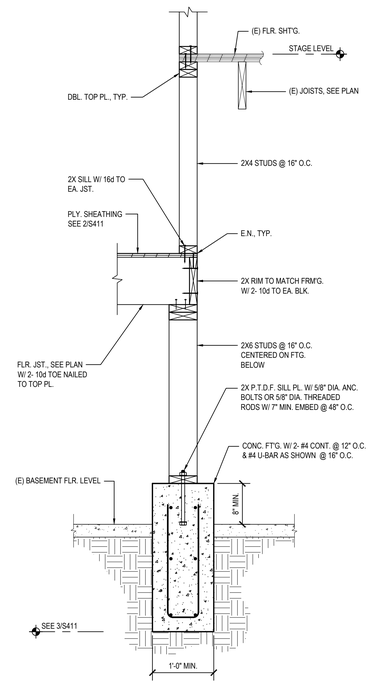

WALL SECTION AT LIFT (5)

SCALE: 1 = 1'-0"

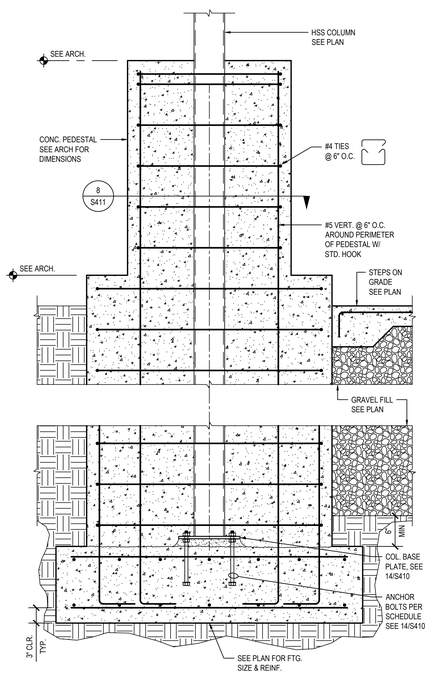

NOTE:
1. RUN CONT. FTG. REINF. THRU SPREAD FTG.
2. SEE 15/S410 FOR MORE INFORMATION

MAIN ENTRY PEDESTAL SECTION (10)

SCALE: 1 = 1'-0"

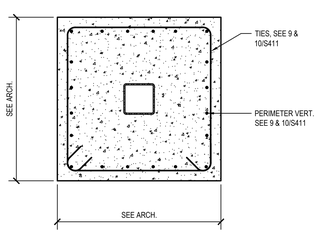

PEDESTAL PLAN SECTION (8)

SCALE: 1'-0"

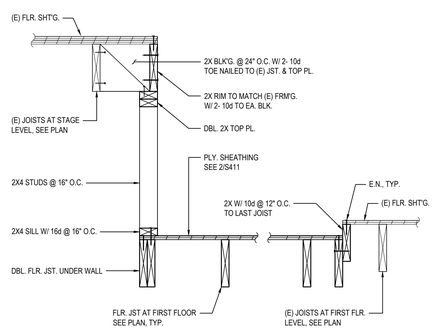

SECTION AT LIFT WALL (6)

SCALE: 1 = 1'-0"

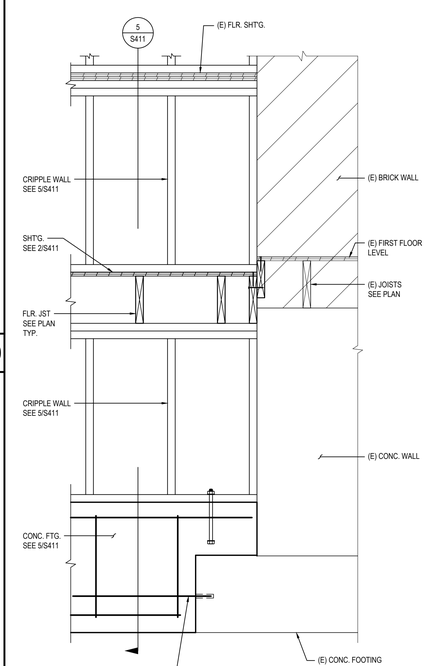

LIFT WALL FOOTING TO (E) FOOTING (3)

SCALE: 1 = 1'-0"

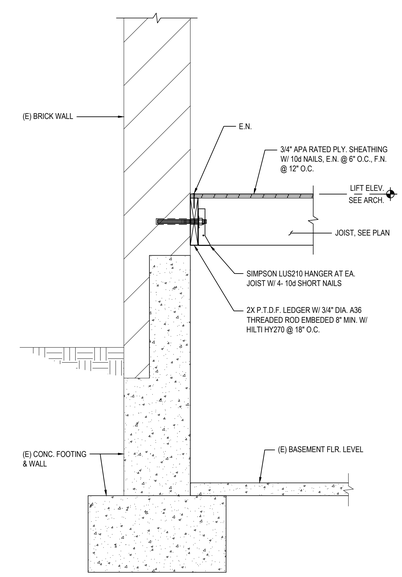

NEW LEDGER AT LIFT (2)

SCALE: 3/4" = 1'-0"

Copyright © 2025
All ideas, designs, arrangements and plans indicated or represented by this drawing are owned by, and the property of, NICHOLS, MELBURG and ROSSETTO and were created, evolved and developed for use on, and in conjunction with, the specified project. None of such ideas, designs, arrangements and plans shall be used, or disclosed to any person, firm or corporation for any purpose whatsoever without the written permission of NICHOLS, MELBURG and ROSSETTO.

NICHOLS MELBURG & ROSSETTO
ARCHITECTS + ENGINEERS
300 KNOLLCREST DRIVE
REDDING, CA. 96002
(530) 222-3300 (530) 222-3538 FAX
http://www.nmrdesign.com

CONSULTANTS

STRUCTURAL ENGINEERING
555 MAIN STREET, STE. 300
CHICO, CA. 95928
(530) 891-1710 (530) 891-0138 FAX
https://nmrdesign.com

LICENSE STAMPS

REGISTERED PROFESSIONAL ENGINEER
EDWARD V. FLAKE
No. 5[illegible]
EXP. [illegible]-30-25
STRUCTURAL
STATE OF CALIFORNIA

PROJECT NAME

TEHAMA COUNTY
CORNING
VETERAN'S HALL

1620 SOLANO ST.
CORNING, CA

SHEET TITLE

FOUNDATION & FRAMING DETAILS

DRAWING STATUS

CONSTRUCTION DOCUMENTS

REVISIONS

Sym.	Description	Date

Drawn By	NMR
Date Issued	2/13/2025
Scale	AS NOTED
Project No.	21-6497

SHEET No.

S411

Login Name: LeonardF
Plot Date: February 13, 2025 - 1:53 am
File Name: S:\Work\21 Projects\21-6497 Tehama Co. Corning Vets Hall\02 DRWG\S\21-6497 S411 FD01.dwg
Plot Scale: 1:1 / TILL

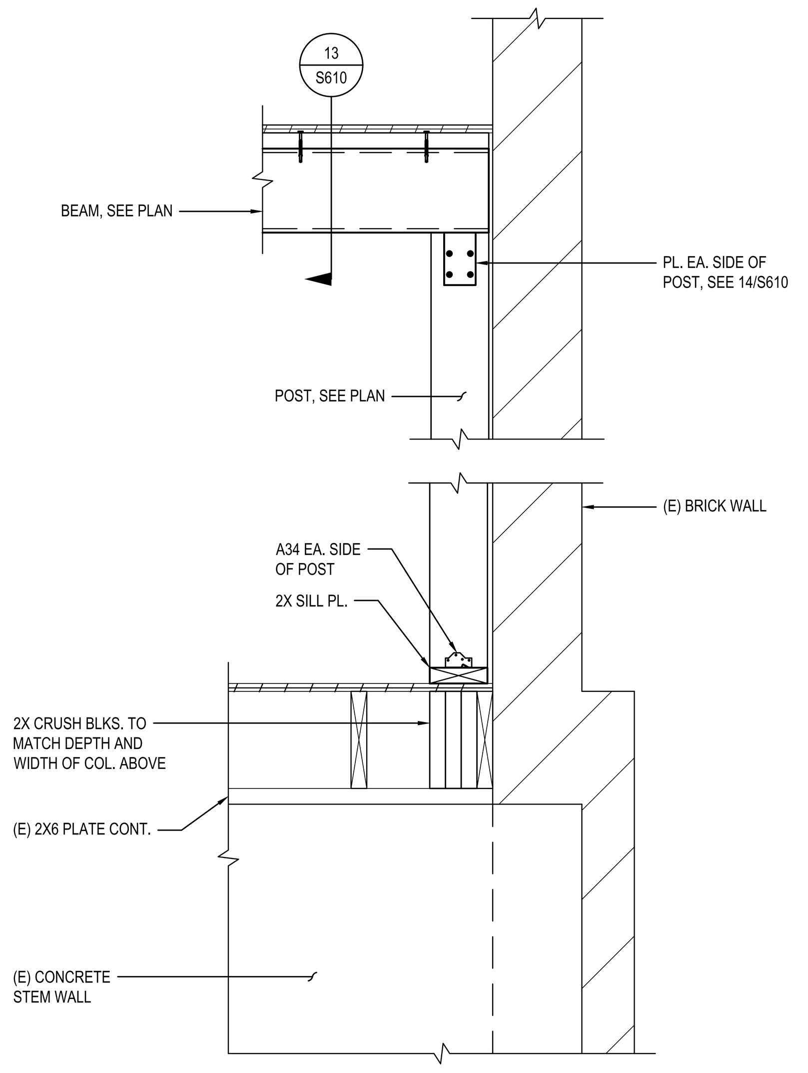

HSS BEAM SUPPORT AT GRID F — SCALE: 1 = 1'-0" (16)

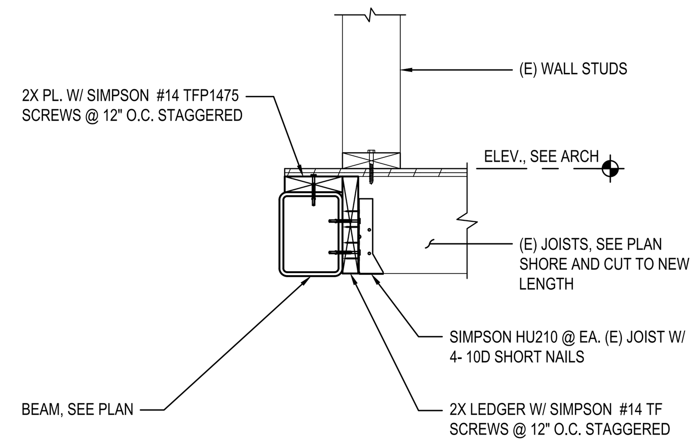

SECTION AT HSS BEAM — N.T.S. (13)

NOT USED — N.T.S. (9)

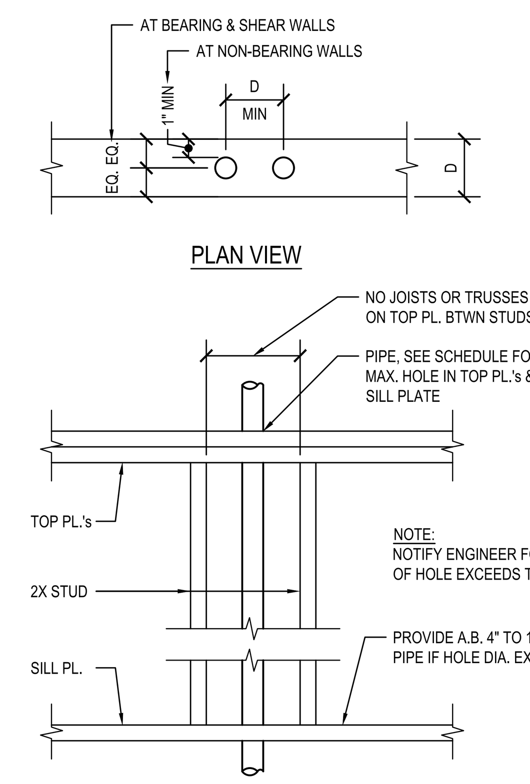

HOLE SCHEDULE	
WALL THICKNESS	HOLE DIA.
3 1/2"	1 1/4"
5 1/2"	2"
7 1/4"	2 3/4"
9 1/4"	3 1/2"
11 1/4"	4"

PIPE THROUGH STUD WALL — N.T.S. (5)

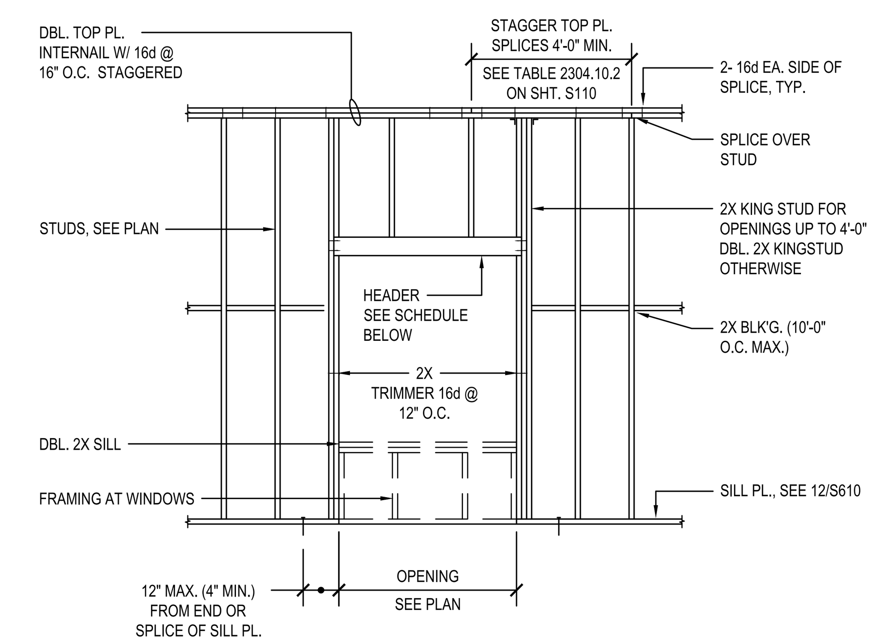

NOTE:
SEE TABLE 2304.10.2 ON SHT. S110
FOR TYPICAL NAILING REQUIREMENTS

HEADER DEPTH	MAX OPENING
3 1/2"	4'-0"
5 1/2"	8'-0"
7 1/4"	12'-0"

TYPICAL INTERIOR NON-BEARING WALL FRAMING ELEVATION — N.T.S. (1)

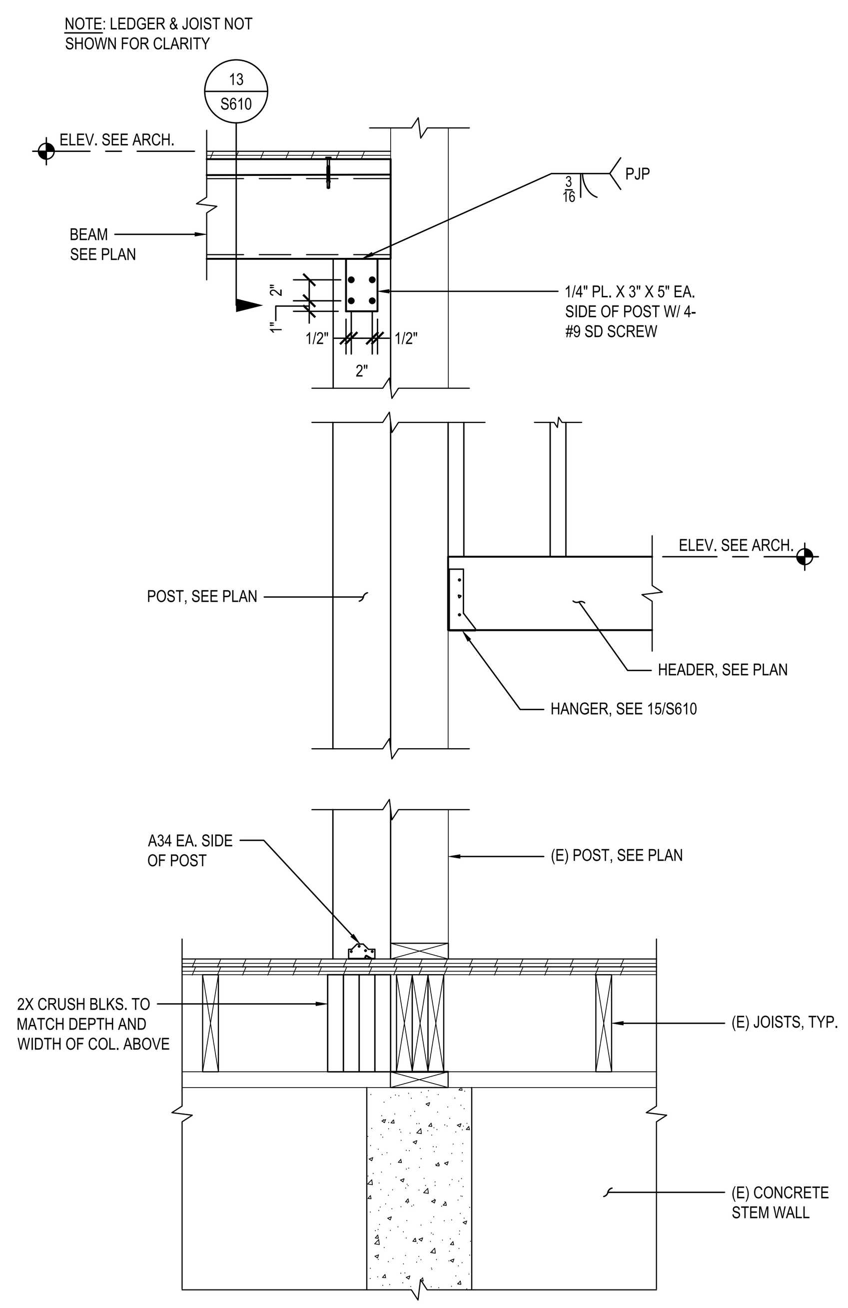

HSS BEAM SUPPORT AT GRID E — SCALE: 1 = 1'-0" (14)

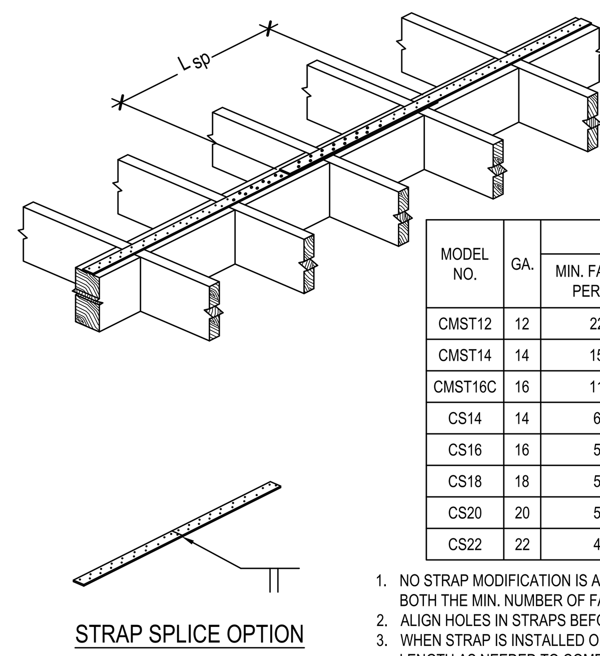

MODEL NO.	GA.	STRAP LAP SPLICE	
		MIN. FASTENERS PER SPLICE	MIN. SPLICE LENGTH (Lsp)
CMST12	12	22- 10d	21"
CMST14	14	15- 10d	15"
CMST16C	16	11- 10d	10"
CS14	14	6- 10d	9"
CS16	16	5- 10d	8"
CS18	18	5- 10d	8"
CS20	20	5- 10d	8"
CS22	22	4- 10d	5"

1. NO STRAP MODIFICATION IS ALLOWED & THE SPLICE MUST MEET BOTH THE MIN. NUMBER OF FASTENERS & THE MIN. SPLICE LENGTH.
2. ALIGN HOLES IN STRAPS BEFORE NAILING.
3. WHEN STRAP IS INSTALLED ON I-JOISTS OR LVL, ADJUST SPLICE LENGTH AS NEEDED TO COMPLY W/ 10d MIN. NAIL SPACING INTO:
   LVL: FACE = 3", EDGE = 4"
   TOP OR BOT. I-JOIST FLANGE: FACE = 3", EDGE = 6"

TYPICAL STRAP SPLICE — N.T.S. (10)

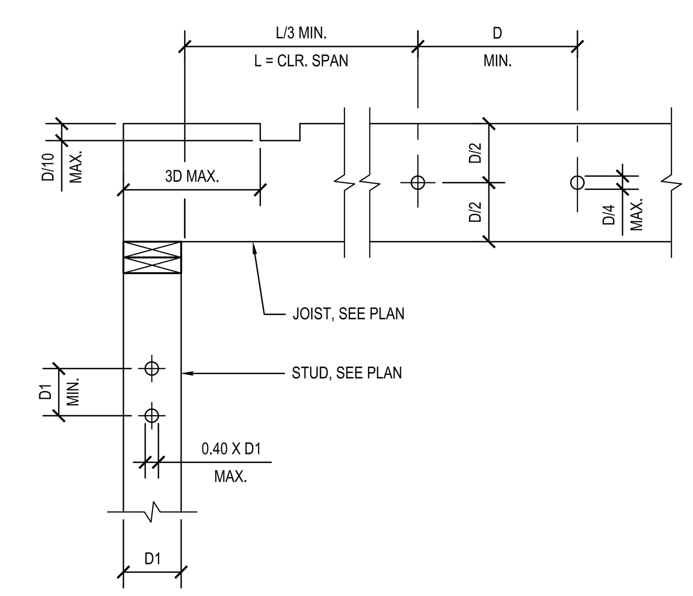

HOLES AND NOTCHES IN STUDS AND JOISTS — N.T.S. (6)

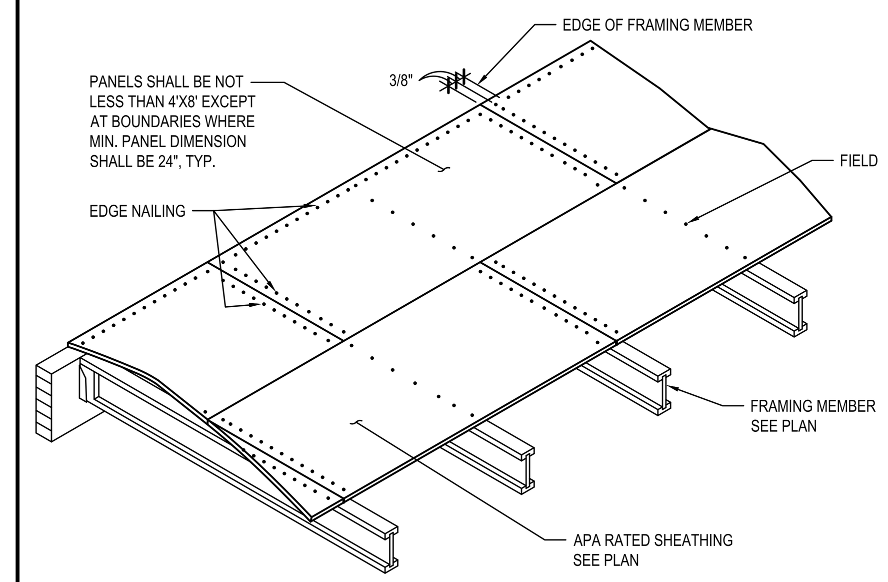

(EXAMPLE)
SEE PLAN FOR DIAPHRAGM NAILING CALL-OUT(S) . . . . 10d @ 6" O.C. E.N.,F.N.
NAIL SPACING AT SHEATHING PANEL EDGES & INT. LATERAL FORCE RESISTING SYSTEM LINES
NAIL SPACING IN FIELD OF SHEATHING PANEL

TYPICAL UNBLOCKED DIAPHRAGM NAILING — N.T.S. (2)

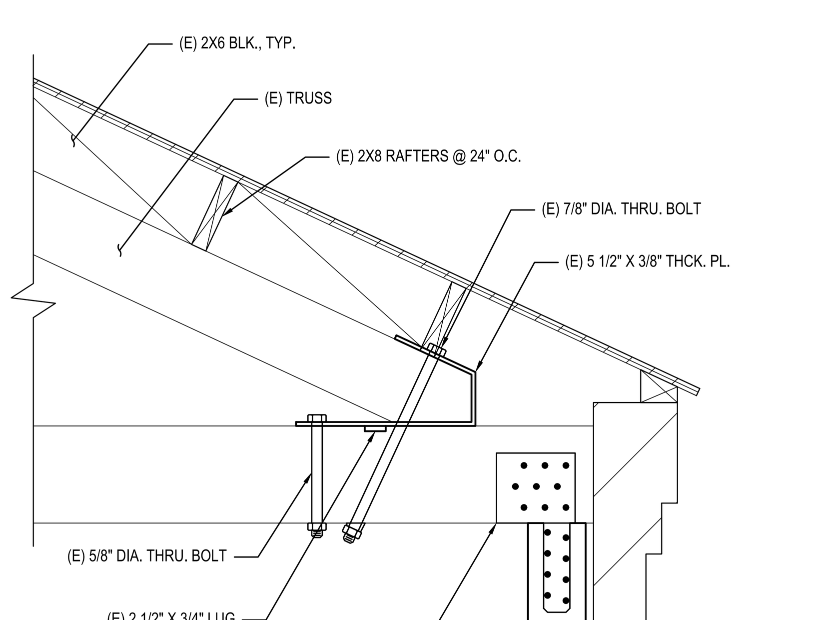

TRUSS REPAIR DETAIL — SCALE: 1 = 1'-0" (17)

STRAP SCHEDULE

STRAP	END LENGTH*	END NAIL	END LENGTH** NAILING @ 3X/4X	END LENGTH** NAILING @ I-JST.
CMST12	39"	43- 10d	FILL ALL HOLES	FILL ALTERNATE HOLES IN ROWS
CMST14	30"	33- 10d		
CSMTC16	20"	25- 10d		
CS14	15"	13- 10d	FILL ALL HOLES	FILL ALTERNATE HOLES IN ROWS
CS16	11"	10- 10d		
CS18	9"	8- 10d		
CS20	7"	6- 10d		
CS22	6"	5- 10d		

* END LENGTH @ I-JOISTS = 2.0 x END LENGTH
** MIN. SPACING W/ 10d NAIL INTO THE LVL FACE = 3" & INTO THE LVL EDGE = 4"

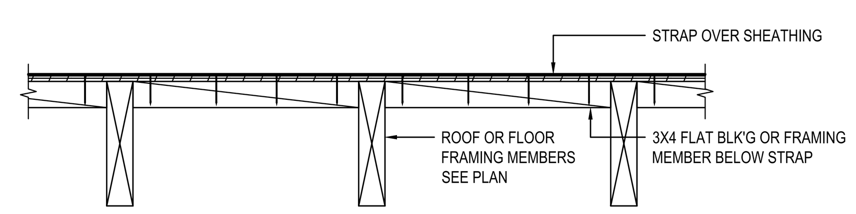

STRAP DETAIL — N.T.S. (11)

CEILING JOIST SCHEDULE - DL = 6 PSF, LL = 200 LB POINT LOAD			
JOIST SPAN	FRAMING	2X BLK'G.	LEDGER NAILS
UP TO 7'-0"	2X4 @ 24" O.C.	NONE	2- 10d
UP TO 12'-0"	2X6 @ 24" O.C.	MID SPAN	3- 10d
UP TO 17'-0"	2X8 @ 24" O.C.	1/3 POINTS	4- 10d

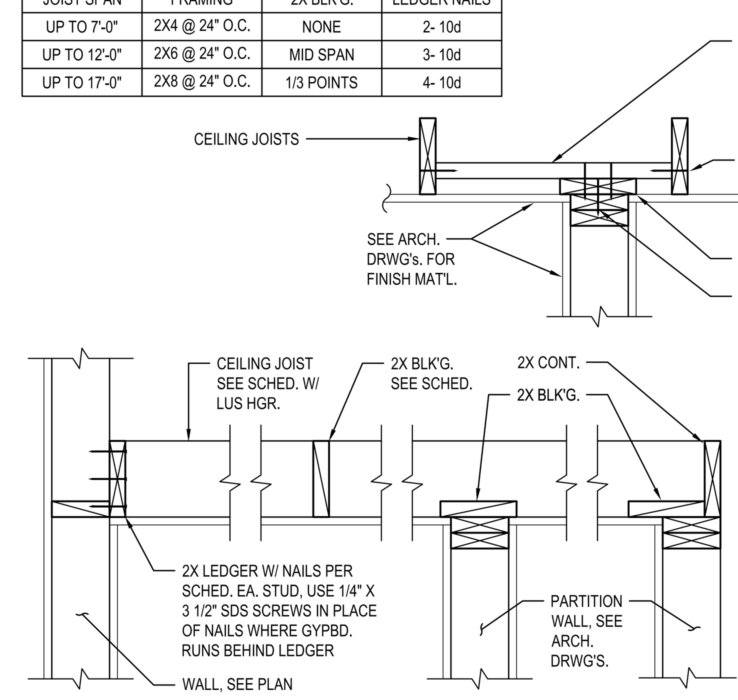

CEILING JOIST DETAILS — N.T.S. (7)

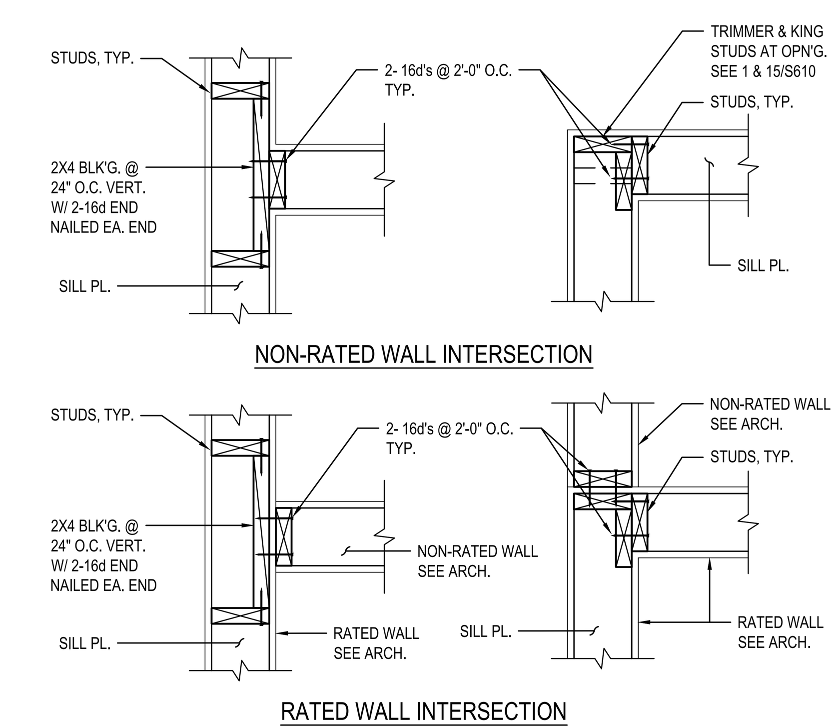

WALL INTERSECTIONS PLAN SECTIONS — N.T.S. (3)

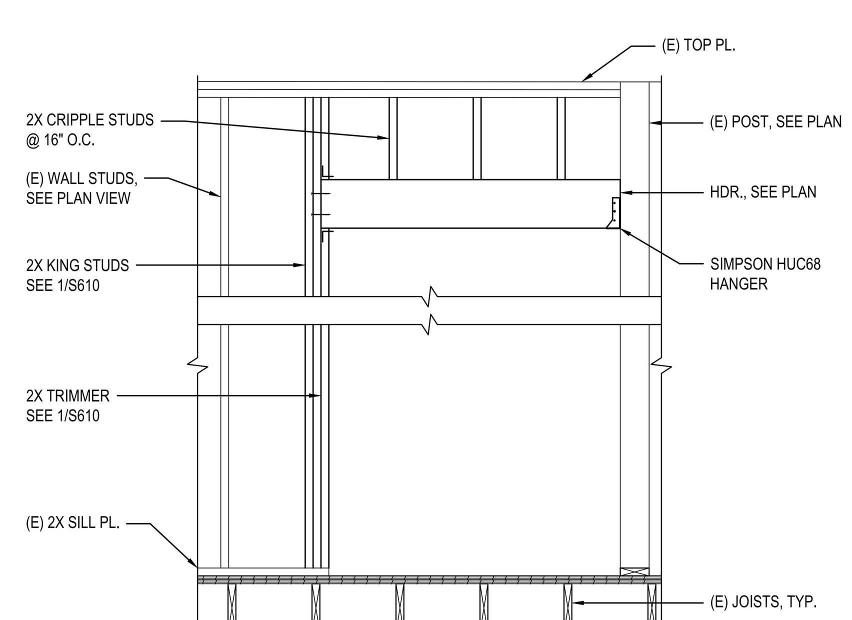

WALL ELEVATION AT (N) STAIR — N.T.S. (15)

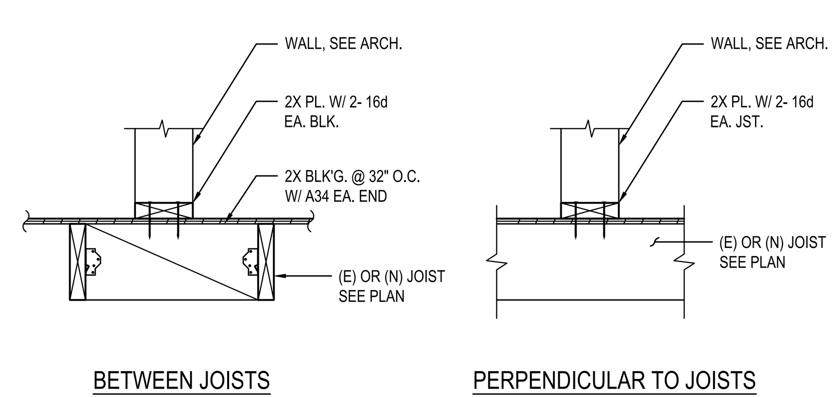

TYPICAL BOT OF NON-BEARING WALL TO FRAMING DETAIL — N.T.S. (12)

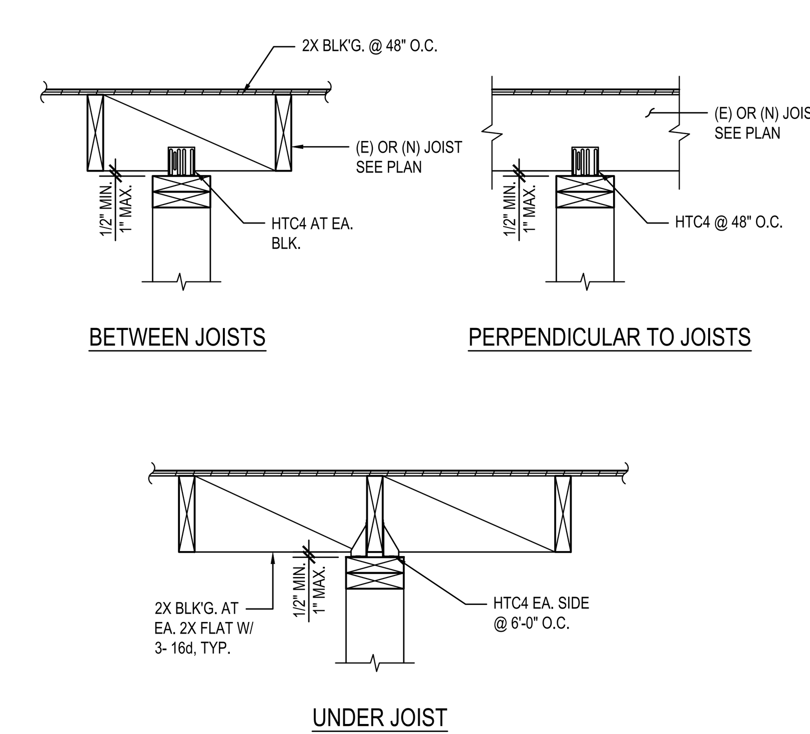

TYPICAL TOP OF NON-BEARING WALL TO FRAMING DETAIL — N.T.S. (8)

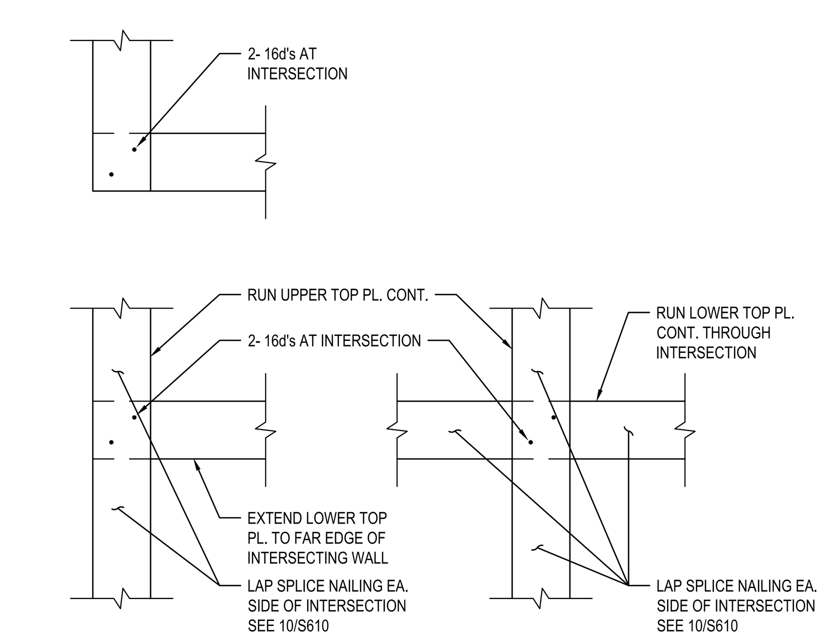

TOP PLATE INTERSECTIONS — N.T.S. (4)

Copyright © 2025
All ideas, designs, arrangements and plans indicated or represented by this drawing are owned by, and the property of, NICHOLS, MELBURG and ROSSETTO and were created, evolved and developed for use on, and in conjunction with, the specified project. None of such ideas, designs, arrangements or plans shall be used by, or disclosed to any person, firm or corporation for any purpose whatsoever without the written permission of NICHOLS, MELBURG and ROSSETTO.

NICHOLS MELBURG & ROSSETTO
ARCHITECTS + ENGINEERS
300 KNOLLCREST DRIVE
REDDING, CA. 96002
(530) 222-3300 (530) 222-3538 FAX
http://www.nmrdesign.com

CONSULTANTS

STRUCTURAL ENGINEERING
555 MAIN STREET, STE. 300
CHICO, CA. 95928
(530) 891-1710 (530) 891-0138 FAX
https://nmrdesign.com

LICENSE STAMPS

REGISTERED PROFESSIONAL ENGINEER
LEONARD V. FISHER
No. 5139
EXP. 9-30-25
STRUCTURAL
STATE OF CALIFORNIA

PROJECT NAME

TEHAMA COUNTY CORNING VETERAN'S HALL
1620 SOLANO ST.
CORNING, CA

SHEET TITLE

TYPICAL WOOD FRAMING DETAILS & SECTIONS

DRAWING STATUS

CONSTRUCTION DOCUMENTS

REVISIONS

Sym.	Description	Date

Drawn By	NMR
Date Issued	2/13/2025
Scale	AS NOTED
Project No.	21-6497

SHEET No.

S610

Login Name: LeonardF
Plot Date: February 13, 2025 - 11:53 am
File Name: S:\Swork\21 Projects\21-6497 Tehama Co Corning Vets Hall\02 DRWGS\21-6497 S610 WDDT.dwg
XREFS: X-TITL

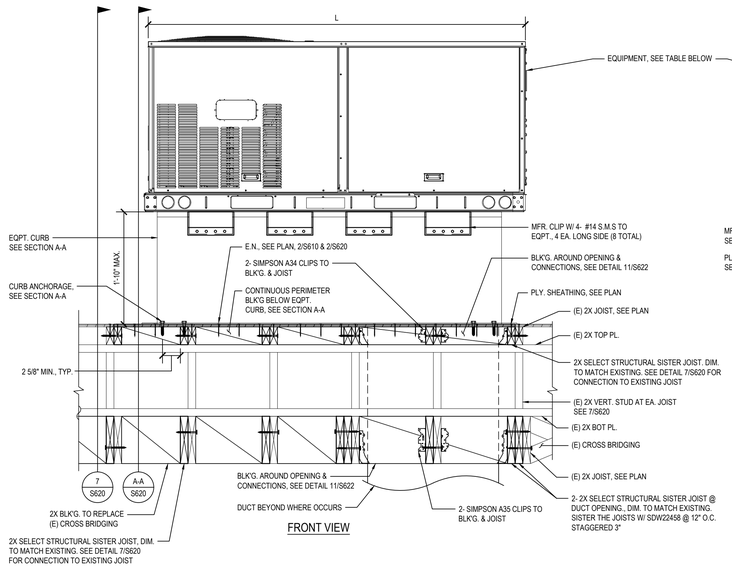

FRONT VIEW

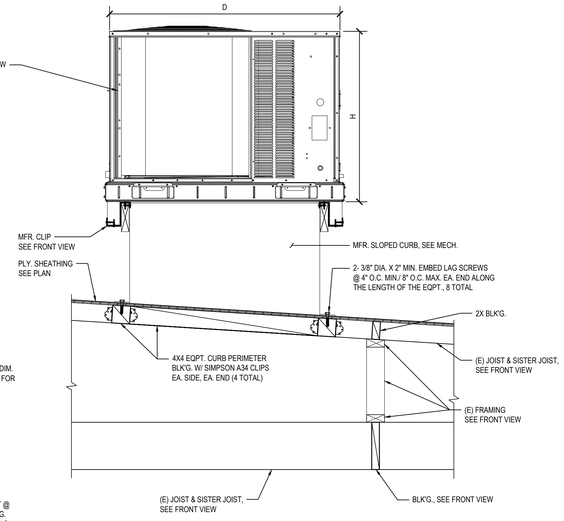

SECTION A-A

EQUIPMENT SCHEDULE

EQUIPMENT NAME	DIMENSIONS* (IN) LENGTH (L) X DEPTH (D) X HEIGHT (H)	C.G. (IN) (A.F.F.)	CALCULATION COEFFICIENTS			DESIGN WEIGHT (LBS)
			ap	Rp	z/h	
RTU-1	74.375 X 46.625 X 33.375	39 MAX.	2.5	6.0	1/1	1000 MAX.
RTU-2	74.375 X 46.625 X 33.375	39 MAX.	2.5	6.0	1/1	1000 MAX.
MAU	79 X 37.375 X 36.75	41 MAX.	2.5	6.0	1/1	1100 MAX.

* CONTRACTOR TO VERIFY DIMENSIONS

RTU 1,2 & MAU ANCHORAGE

SCALE: 1 = 1'-0"

6

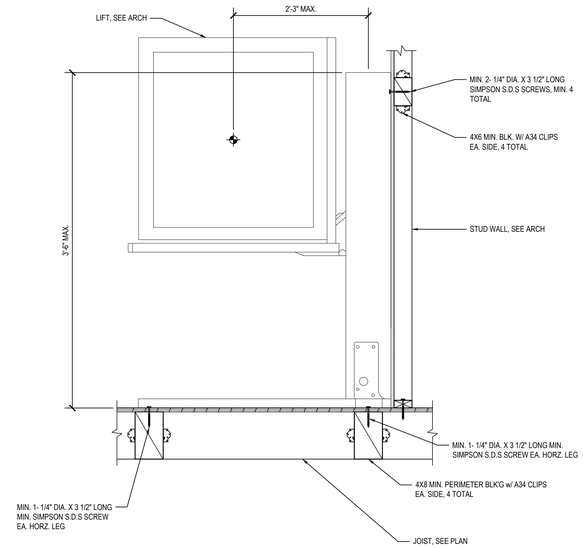

LIFT ANCHORAGE

SCALE: 1 = 1'-0"

1

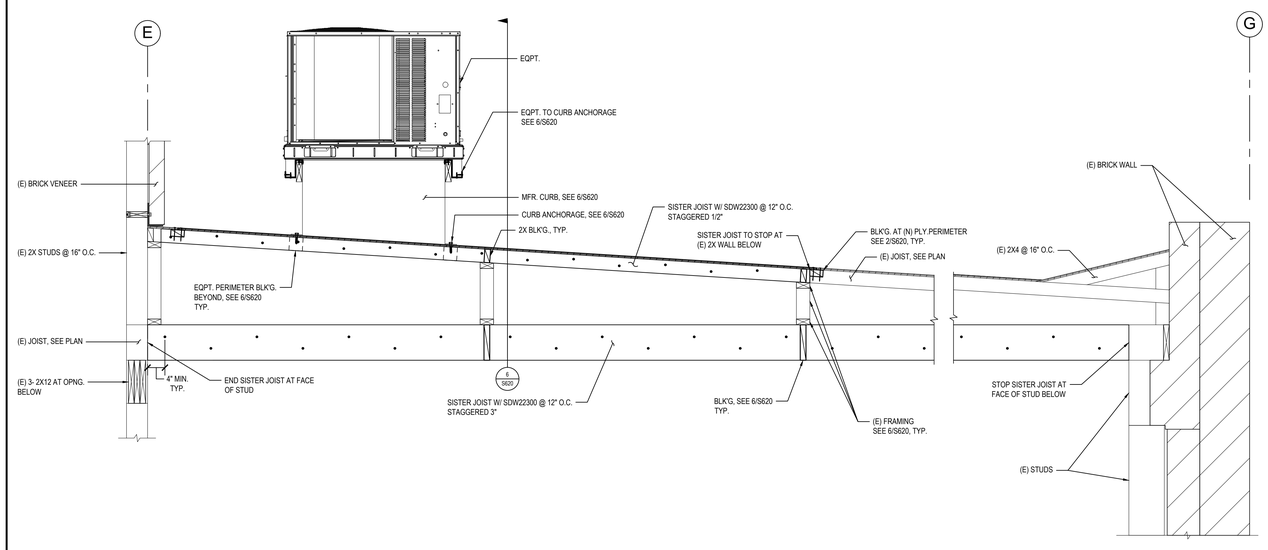

SECTION AT RTU 1, 2 & MAU

SCALE: 3/4" = 1'-0"

7

NOT USED

N.T.S.

4

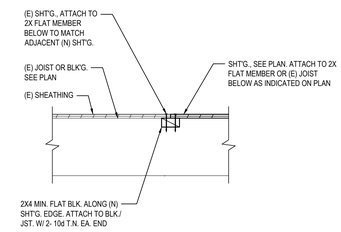

BLOCKING AT NEW SHEATHING

SCALE: 1 = 1'-0"

2

NOT USED

N.T.S.

5

NOT USED

N.T.S.

3

Copyright © 2025

All ideas, designs, arrangements and plans indicated or represented by this drawing are owned by, and the property of, NICHOLS, MELBURG and ROSSETTO and were created, evolved and developed for use on, and in conjunction with, the specified project. None of such ideas, designs, arrangements and plans shall be used by, or disclosed to any person, firm or corporation for any purpose whatsoever without the written permission of NICHOLS, MELBURG and ROSSETTO.

NICHOLS MELBURG ROSSETTO
ARCHITECTS + ENGINEERS
300 KNOLLCREST DRIVE
REDDING, CA. 96002
(530) 222-3300 (530) 222-3538 FAX
http://www.nmrdesign.com

CONSULTANTS

STRUCTURAL ENGINEERING
555 MAIN STREET, STE. 300
CHICO, CA. 95928
(530) 891-1710 (530) 891-0138 FAX
https://nmrdesign.com

LICENSE STAMPS

REGISTERED PROFESSIONAL ENGINEER
LEONARD V. FLAKE
No. 6-30-25
EXP. 6-30-25
STRUCTURAL
STATE OF CALIFORNIA

PROJECT NAME

TEHAMA COUNTY
CORNING
VETERAN'S HALL

1620 SOLANO ST.
CORNING, CA

SHEET TITLE

FRAMING & EQUIPMENT
ANCHORAGE DETAILS

DRAWING STATUS

CONSTRUCTION
DOCUMENTS

REVISIONS

Sym.	Description	Date

Drawn By	NMR
Date Issued	2/13/2025
Scale	AS NOTED
Project No.	21-6497

SHEET No.

S620

Login Name: LeonardF
Plot Date: February 13, 2025 - 11:54 am
File Name: G:\Work\21 Projects\21-6497 Tehama Co Corning Vets Hall\02 DRW\S\21-6497 S620 WDOT.dwg
S620-S_01TEL

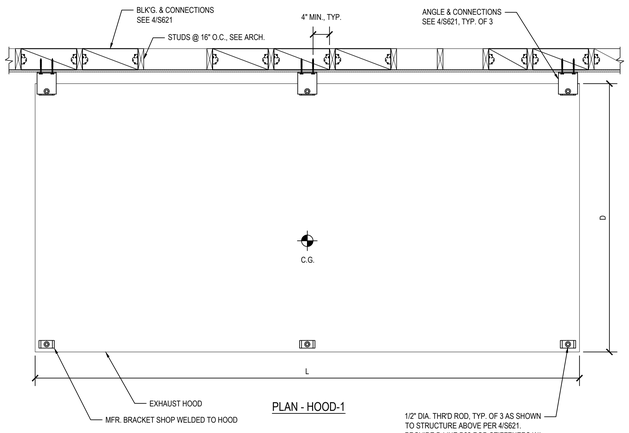

PLAN - HOOD-1

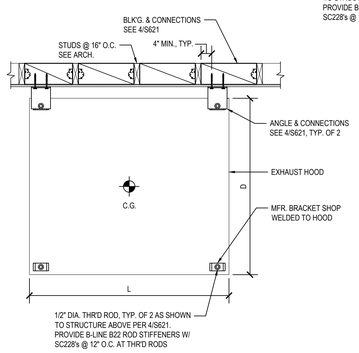

PLAN - HOOD-2

EQUIPMENT SCHEDULE						
EQUIPMENT NAME	DIMENSIONS* (IN) LENGTH (L) X DEPTH (D) X HEIGHT (H)	C.G. (IN) (A.F.F.)	CALCULATION COEFFICIENTS			DESIGN WEIGHT (LBS)
			ap	Rp	z/h	
HOOD -1	166 X 60 X 24	104 MAX.	2.5	6.0	1/1	1000 MAX.
HOOD -2	42 X 42 X 24	104 MAX.	2.5	6.0	1/1	200 MAX.

EXHAUST HOOD - PLAN VIEW

SCALE: 3/4" = 1'-0" (3)

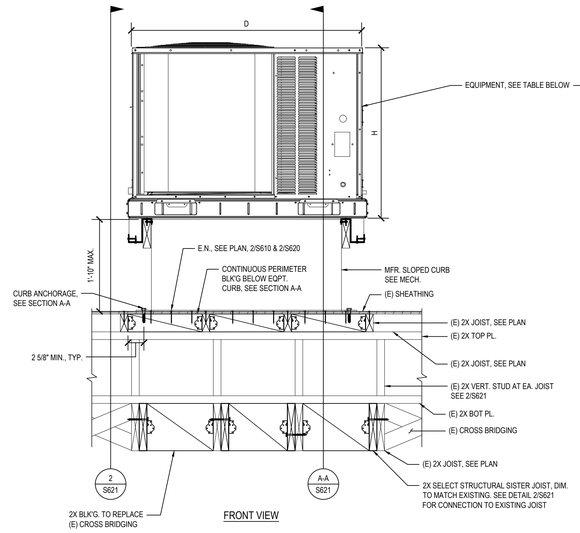

FRONT VIEW

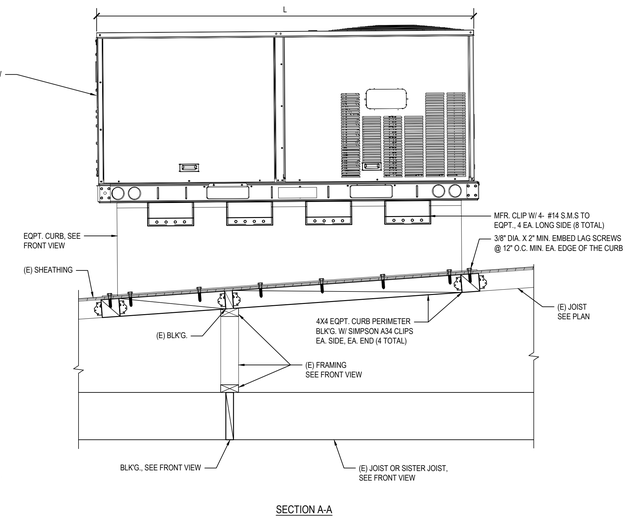

SECTION A-A

EQUIPMENT SCHEDULE						
EQUIPMENT NAME	DIMENSIONS* (IN) LENGTH (L) X DEPTH (D) X HEIGHT (H)	C.G. (IN) (A.F.F.)	CALCULATION COEFFICIENTS			DESIGN WEIGHT (LBS)
			ap	Rp	z/h	
RTU-3	74.375 X 46.625 X 41.125	42.5 MAX.	2.5	6.0	1/1	1300 MAX.

* CONTRACTOR TO VERIFY DIMENSIONS

HVAC UNIT ANCHORAGE

SCALE: 3/4" = 1'-0" (1)

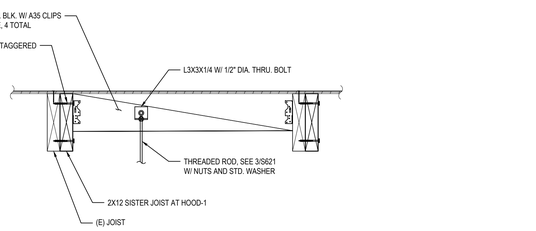

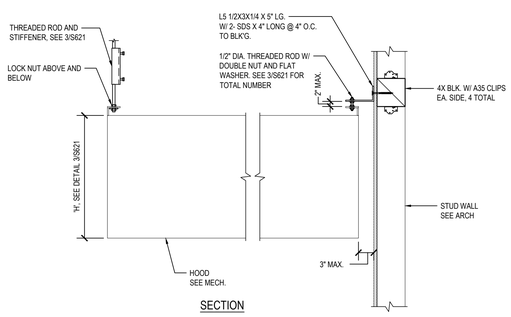

SECTION

SECTION AT EXHAUST HOOD

SCALE: 1 = 1'-0" (4)

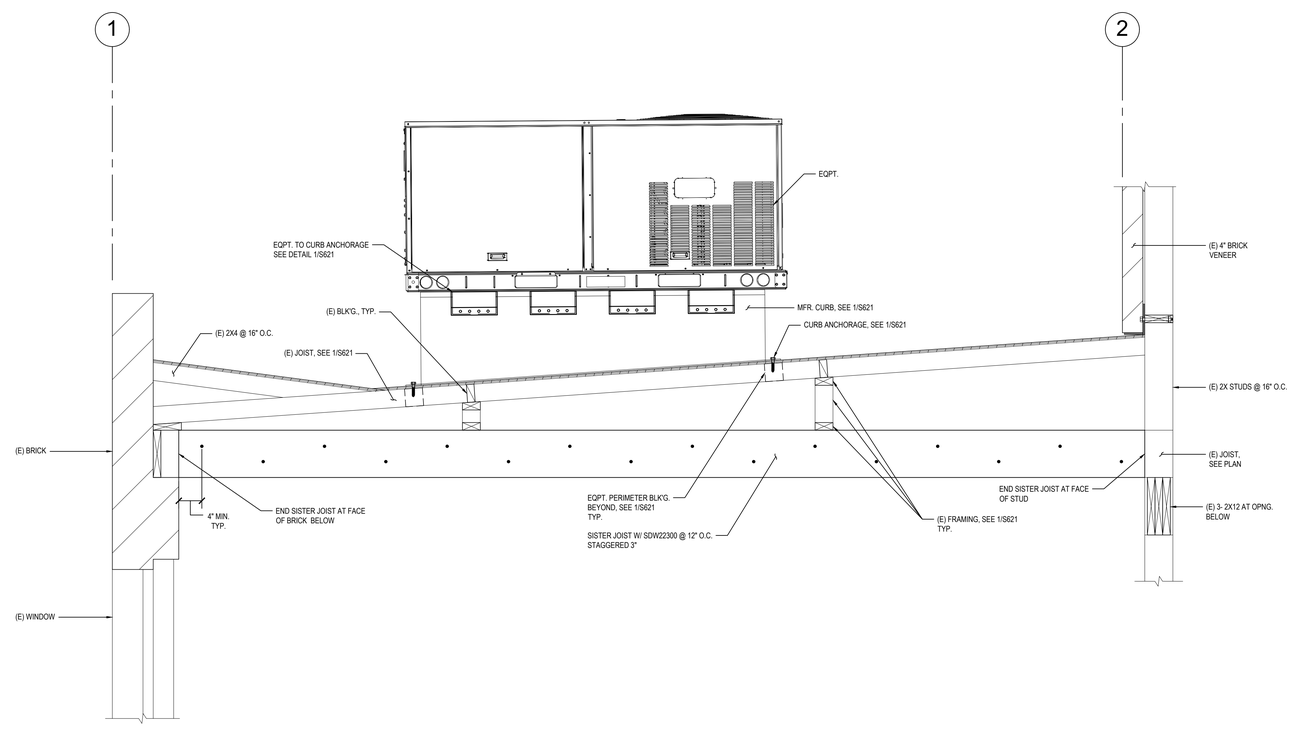

SECTION AT RTU 3

SCALE: 3/4" = 1'-0" (2)

Copyright © 2025
All ideas, designs, arrangements and plans indicated or represented by this drawing are owned by, and the property of, NICHOLS, MELBURG and ROSSETTO and were created, evolved and developed for use on, and in conjunction with, the specified project. None of such ideas, designs, arrangements and plans shall be used, or disclosed to any person, firm or corporation for any purpose whatsoever without the written permission of NICHOLS, MELBURG and ROSSETTO.

NICHOLS MELBURG & ROSSETTO
ARCHITECTS + ENGINEERS
300 KNOLLCREST DRIVE
REDDING, CA. 96002
(530) 222-3300 (530) 222-3538 FAX
http://www.nmrdesign.com

CONSULTANTS

STRUCTURAL ENGINEERING
555 MAIN STREET, STE. 300
CHICO, CA. 95928
(530) 891-1710 (530) 891-0138 FAX
https://nmrdesign.com

LICENSE STAMPS

REGISTERED PROFESSIONAL ENGINEER
LEONARD V. FISKE
No. 3000
EXP. 6-30-25
STRUCTURAL
STATE OF CALIFORNIA

PROJECT NAME

TEHAMA COUNTY
CORNING
VETERAN'S HALL

1620 SOLANO ST.
CORNING, CA

SHEET TITLE

FRAMING & EQUIPMENT
ANCHORAGE DETAILS

DRAWING STATUS

CONSTRUCTION
DOCUMENTS

REVISIONS

Sym.	Description	Date

Drawn By	VR
Date Issued	2/13/2025
Scale	AS NOTED
Project No.	21-6497

SHEET No.

S621

Login Name: LeonardF
Plot Date: February 13, 2025 - 11:55 am
File Name: S:\Work\21 Projects\21-6497 Tehama Co. Corning Vets Hall\02 DRWG\S\21-6497 S621 WDOT.dwg
ARCH D X RTL

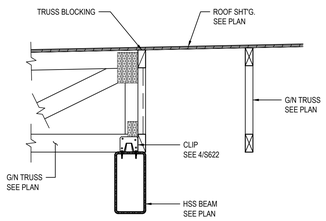

SECTION AT G/N TRUSS TRANSITION (9) — SCALE: 1 = 1'-0"

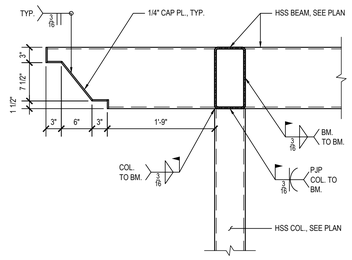

HSS BEAM END DETAIL (5) — SCALE: 1 = 1'-0"

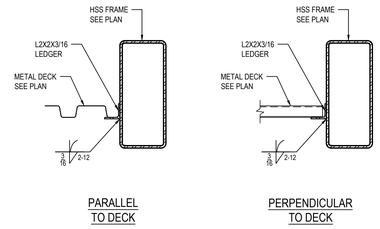

ANGLE LEDGER AT HSS FRAME (1) — SCALE: 1 1/2" = 1'-0"

NOT USED (17) — SCALE: 1 = 1'-0"

NOT USED (13) — SCALE: 1 = 1'-0"

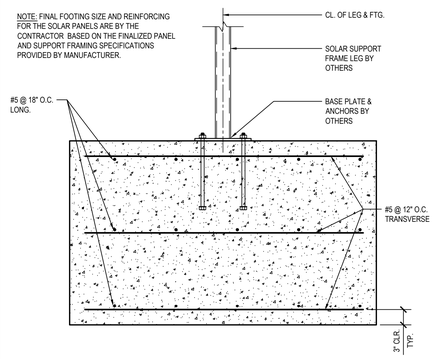

SOALR ARRAY FOOTING DETAIL (10) — N.T.S.

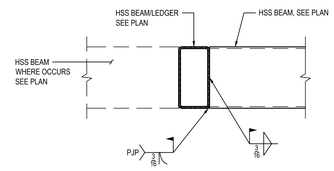

HSS BEAM TO BEAM/LEDGER CONNECTION (6) — SCALE: 1 = 1'-0"

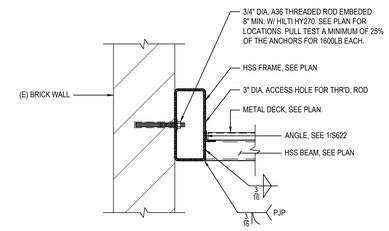

HSS FRAME TO BRICK WALL SECTION (2) — SCALE: 1 = 1'-0"

NOT USED (18) — SCALE: 1 = 1'-0"

NOT USED (14) — SCALE: 1 = 1'-0"

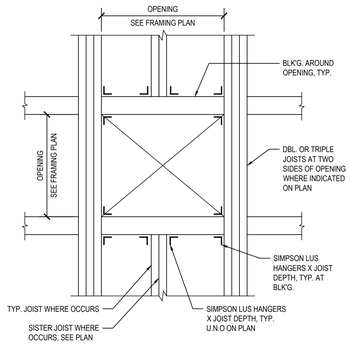

OPENING IN FLOOR FRAMING (11) — SCALE: 1 = 1'-0"

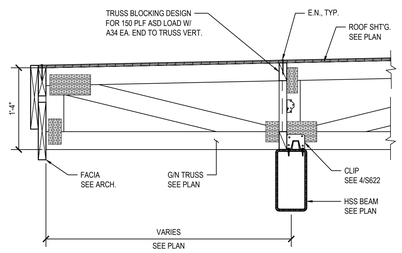

G/N TRUSS EAVE SECTION (7) — SCALE: 1 = 1'-0"

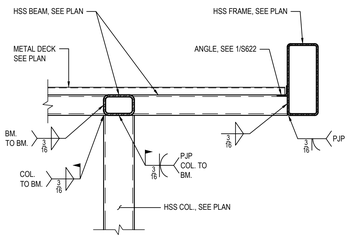

HSS BEAM TO COLUMN CONNECTION (3) — SCALE: 1 = 1'-0"

NOT USED (19) — SCALE: 1 = 1'-0"

NOT USED (15) — SCALE: 1 = 1'-0"

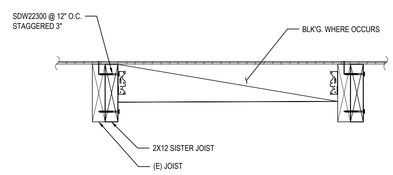

JOIST STRENGTHENING AT OPENINGS (12) — SCALE: 1 = 1'-0"

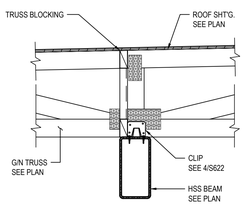

G/N TRUSS INTERIOR BEARING SECTION (8) — SCALE: 1 = 1'-0"

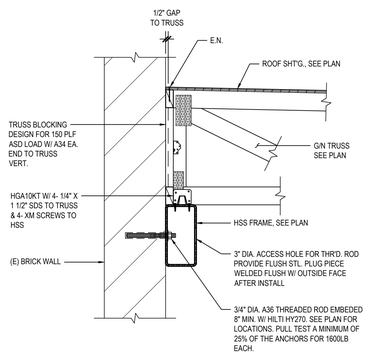

HSS LEDGER FRAME AT BACK ENTRY SECTION (4) — SCALE: 1 = 1'-0"

NOT USED (20) — SCALE: 1 = 1'-0"

NOT USED (16) — SCALE: 1 = 1'-0"

Login Name: LaurenF
Plot Date: February 13, 2025 - 11:56 am
File Name: S:\Work\21 Projects\21-6497 Tehama Co Corning Vets Hall\02 DRWG\S\21-6497 S622 WCDT.dwg
PAPER: 24" BTU

Copyright © 2025
All ideas, designs, arrangements and plans indicated or represented by this drawing are owned by, and the property of, NICHOLS, MELBURG and ROSSETTO and were created, evolved and developed for use on, and in conjunction with, the specified project. None of such ideas, designs, arrangements and plans shall be used, or disclosed to any person, firm or corporation for any purpose whatsoever without the written permission of NICHOLS, MELBURG and ROSSETTO.

NICHOLS MELBURG & ROSSETTO
ARCHITECTS + ENGINEERS
300 KNOLLCREST DRIVE
REDDING, CA. 96002
(530) 222-3300 (530) 222-3538 FAX
http://www.nmrdesign.com

CONSULTANTS

STRUCTURAL ENGINEERING
555 MAIN STREET, STE. 300
CHICO, CA. 95928
(530) 891-1710 (530) 891-0138 FAX
https://nmrdesign.com

LICENSE STAMPS

REGISTERED PROFESSIONAL ENGINEER
LEONARD V. FUSAKE
No. 19 EXP. 6-30-25
STRUCTURAL
STATE OF CALIFORNIA

PROJECT NAME

TEHAMA COUNTY
CORNING
VETERAN'S HALL

1620 SOLANO ST.
CORNING, CA

SHEET TITLE

FRAMING DETAILS

DRAWING STATUS

CONSTRUCTION DOCUMENTS

REVISIONS

Sym.	Description	Date

Drawn By	NMR
Date Issued	2/13/2025
Scale	AS NOTED
Project No.	21-6497

SHEET No.

S622

MECHANICAL LEGEND

SYMBOLS	ABBREVIATIONS	
	ABC	ABOVE CEILING
	AFF	ABOVE FINISHED FLOOR
AD	AD	ACCESS DOOR
12/8	AL	ACOUSTIC LINED DUCT (DIM IS INTERNAL)
	AC	AIR CONDITIONING
	BHP	BRAKE HORSE POWER
	CFM	CUBIC FEET PER MINUTE
A 123 CFM		DIFFUSER TAG
	D	DEMO
	DB	DRY BULB
12/8		DUCT (RECTANGULAR DUCT, DIMENSIONS IN INCHES)
12Ø		DUCT (ROUND DUCT, DIAMETER IN INCHES)
D		DUCT DROP IN DIRECTION OF ARROW
R		DUCT RISE IN DIRECTION OF ARROW
	EER	ENERGY EFFICIENCY RATIO
	EAT	ENTERING AIR TEMPERATURE
EA	EA	EXHAUST AIR DUCT
	EF	EXHAUST FAN
		EXHAUST GRILLE
	(E), EX	EXISTING
	ESP	EXTERNAL STATIC PRESSURE
	FPM	FEET PER MINUTE
		FLEXIBLE DUCT
	FLA	FULL LOAD AMPS
	LAT	LEAVING AIR TEMPERATURE
L		LOUVERED DOOR
	MOCP	MAXIMUM OVER CURRENT PROTECTION
	MCA	MINIMUM CIRCUIT AMPACITY
M		MOTORIZED DAMPER
	(N)	NEW
		NEW CONNECTION TO EXISTING
	OA	OUTSIDE AIR
1 123 CFM		REGISTER/GRILLE TAG
	(R), R	RELOCATE
		REMOVE TO THIS POINT
RA	RA	RETURN AIR DUCT
		RETURN GRILLE
	RL/RS	REFRIGERANT LINE SET
	SEER	SEASONAL ENERGY EFFICIENCY RATIO
SD	SD	SMOKE DETECTOR
SA	SA	SUPPLY AIR DUCT
		SUPPLY DIFFUSER
T	T'STAT	THERMOSTAT (48" AFF TOP OF BOX)
	TSP	TOTAL STATIC PRESSURE
		TURNING VANES
	TYP	TYPICAL
UC		UNDERCUT DOOR
	UG	UNDERGROUND
	VIF	VERIFY IN FIELD
		VOLUME DAMPER - MANUAL OPERATION
	WB	WET BULB

ROOFTOP UNIT SCHEDULE

					Supply Fan					Cooling			Heating			Electrical Data					
ID	Area Served	Manufacturer	Model	Nominal Tonnage	SA CFM	OA CFM	DCV OA CFM	Ext S.P.	BHP	Total MBh	Sensible MBh	SEER/EER	Total MBh	HSPF	Electric Heat (kW)	Service	MCA	MOCP	Weight (lbs)	Dimensions	Notes
RTU-1	SOCIAL ROOM	CARRIER	50GCQJA04	3	1200	320	90	0.75	0.66	32.4	27.6	17/9.5	26.5	8.8	6.5	208/3/60	42	45	1200	74.5"L x 46.5"W x 33.5"H	1 - 10
RTU-2	BANQUET ROOM	CARRIER	50GCQJA04	3	1200	320	90	0.75	0.66	32.4	27.6	17/9.5	26.5	8.8	6.5	208/3/60	42	45	1200	74.5"L x 46.5"W x 33.5"H	1 - 10
RTU-3	OFFICE/LOBBY	CARRIER	50GCQJA06	5	1960	415	85	0.75	1.24	53.7	46.1	17/8.9	44.1	8.9	7.9	208/3/60	60	60	1500	74.5"L x 46.5"W x 41.5"H	1 - 10

NOTES:
1. HINGED ACCESS PANEL.
2. 14" HIGH PITCHED ROOF CURB, CONTRACTOR TO VERIFY ROOF SLOPE.
3. CANFAB 1105-ECV-BDZ-R ECONOMIZER WITH FIXED DRY BULB CONTROL AND BAROMETRIC RELIEF.
4. WIRED 7-DAY PROGRAMMABLE THERMOSTAT WITH SETPOINT ADJUSTMENT AND CO2 SENSOR FOR DEMAND CONTROL VENTILATION.
5. ECOBLUE MULTISPEED SUPPLY FAN.
6. UNPOWERED CONVENIENCE OUTLET.
7. MERV 13 FILTERS.
8. INTEGRATE INTO JOHNSON CONTROLS BUILDING MANAGEMENT SYSTEM.
9. THROUGH THE BASE ELECTRICAL CONNECTION.
10. SINGLE POINT POWER CONNECTION WITH NON FUSED DISCONNECT.

HEAT PUMP SCHEDULE

					Cooling		Heating		Electrical Data						
ID	Service	Location	Manufacturer	Model	Rated Capacity Btu/h	Rating Conditions	Rated Capacity Btu/h	Rating Conditions	Service	MCA	MOCP	Refrigerant	Dimensions	Weight (lbs)	Notes
HP-1	AUDITORIUM	ROOF	DAIKIN	RXTQ60TBVJUA	57,500	80°F DB/67°F WB/95°F OAT	57,000	70°F DB/60°F WB/47°F OAT	208/1/60	29.1	35	R-410A	35-7/16"W x 52-15/16"H x 12-5/8"D	250	1
HP-2	AUDITORIUM	ROOF	DAIKIN	RXTQ60TBVJUA	57,500	80°F DB/67°F WB/95°F OAT	57,000	70°F DB/60°F WB/47°F OAT	208/1/60	29.1	35	R-410A	35-7/16"W x 52-15/16"H x 12-5/8"D	250	1
HP-3	AUDITORIUM	ROOF	DAIKIN	RXTQ60TBVJUA	57,500	80°F DB/67°F WB/95°F OAT	57,000	70°F DB/60°F WB/47°F OAT	208/1/60	29.1	35	R-410A	35-7/16"W x 52-15/16"H x 12-5/8"D	250	1
HP-4	AUDITORIUM	ROOF	DAIKIN	RXTQ60TBVJUA	57,500	80°F DB/67°F WB/95°F OAT	57,000	70°F DB/60°F WB/47°F OAT	208/1/60	29.1	35	R-410A	35-7/16"W x 52-15/16"H x 12-5/8"D	250	1
HP-5	STAGE	ROOF	DAIKIN	RXTQ60TBVJUA	57,500	80°F DB/67°F WB/95°F OAT	57,000	70°F DB/60°F WB/47°F OAT	208/1/60	29.1	35	R-410A	35-7/16"W x 52-15/16"H x 12-5/8"D	250	1
HP-6	STAGE	ROOF	DAIKIN	RXTQ60TBVJUA	57,500	80°F DB/67°F WB/95°F OAT	57,000	70°F DB/60°F WB/47°F OAT	208/1/60	29.1	35	R-410A	35-7/16"W x 52-15/16"H x 12-5/8"D	250	1
HP-7	KITCHEN	ROOF	DAIKIN	RXTQ60TBVJUA	57,500	80°F DB/67°F WB/95°F OAT	57,000	70°F DB/60°F WB/47°F OAT	208/1/60	29.1	35	R-410A	35-7/16"W x 52-15/16"H x 12-5/8"D	250	1

NOTES:
1. PROVIDE WITH ALL REQUIRED REFRIGERATION PIPING AND APPURTENANCES.

FAN COIL UNIT SCHEDULE

								Cooling					Supplemental Heat Electrical Data				Electrical Data					
ID	Manufacturer	Model	System	SA CFM	OA CFM	DCV OA CFM	ESP	Nominal Tonnage	Total MBh	Sensible MBh	Refrigerant	Heating MBh	kW	Service	MCA	MOCP	Service	MCA	MOCP	Dimensions	Weight (lbs)	Notes
FC-1	DAIKIN	FXTQ60TAVJUA	HP-1	1,800	540	120	0.9"	5	57.5	39	R-410A	57	10	208/1/60	48.8	50	208/1/60	8.6	15	24-1/2"W x 58"H x 21"D	250	1 - 4
FC-2	DAIKIN	FXTQ60TAVJUA	HP-2	1,800	540	120	0.9"	5	57.5	36	R-410A	57	10	208/1/60	48.8	50	208/1/60	8.6	15	24-1/2"W x 58"H x 21"D	250	1 - 4
FC-3	DAIKIN	FXTQ60TAVJUA	HP-3	1,800	540	120	0.9"	5	57.5	36	R-410A	57	10	208/1/60	48.8	50	208/1/60	8.6	15	24-1/2"W x 58"H x 21"D	250	1 - 4
FC-4	DAIKIN	FXTQ60TAVJUA	HP-4	1,800	540	120	0.9"	5	57.5	36	R-410A	57	10	208/1/60	48.8	50	208/1/60	8.6	15	24-1/2"W x 58"H x 21"D	250	1 - 4
FC-5	DAIKIN	FXTQ60TAVJUA	HP-5	1,800	540	120	0.9"	5	57.5	36	R-410A	57	10	208/1/60	48.8	50	208/1/60	8.6	15	24-1/2"W x 58"H x 21"D	250	1 - 4
FC-6	DAIKIN	FXTQ60TAVJUA	HP-6	1,800	540	120	0.9"	5	57.5	36	R-410A	57	10	208/1/60	48.8	50	208/1/60	8.6	15	24-1/2"W x 58"H x 21"D	250	1 - 4
FC-7	DAIKIN	FXTQ60TAVJUA	HP-7	1,800	200	--	0.9"	5	57.5	36	R-410A	57	--	--	--	--	208/1/60	8.6	15	24-1/2"W x 58"H x 21"D	250	1 - 3

NOTES:
1. MERV 13 FILTER IN HONEYWELL FILTER RACK. SEE PLANS FOR DETAILS.
2. DIVERITECH CONDENSATE CS-2 SWITCH WIRED TO UNIT FOR OVERFLOW PROTECTION.
3. INTERCONNECTION INTO JOHNSON CONTROLS BUILDING MANAGEMENT SYSTEM. PROVIDE WITH CO2 SENSOR AND THERMOSTAT.
4. ECONOMIZING MIXING BOX.

MAKEUP AIR UNIT SCHEDULE

				Supply Fan			Gas Heating Section			Evaporative Cooler		Electrical Data				
ID	Manufacturer	Model	Location Served	Supply CFM	Ext. S.P.	Motor HP	Input MBh	Output MBh	Fuel	Media	EAT/LAT	Service	MCA	MOCP	Weight (lbs)	Notes
MAU-1	CAPTIVEAIRE	A2-D.250-20D	KITCHEN	2,730	0.5	1.5	132	121	NATURAL GAS	CELDEK	105°F EAT/83°F LAT	208/3/60	8.3	15	1,100	1-5

NOTES:
1. HORIZONTAL CONFIGURATION WITH FRONT DISCHARGE.
2. GALVANIZED MOTORIZED BACKDRAFT DAMPER.
3. EVAPORATIVE COOLING MODULE WITH 90% EFFICIENT 12" CELDEK MEDIA, 2" ALUMINUM MESH FILTERS AND A STAINLESS STEEL COOLING MODULE.
4. PROVIDE AUTOMATIC DRAIN AND FILL KIT FOR EVAPORATIVE COOLING MODULE.
5. MANUFACTURER'S SLOPED ROOF CURB AND EQUIPMENT SUPPORT. CONTRACTOR SHALL CONFIRM ROOF SLOPE PRIOR TO ORDERING EQUIPMENT.

LOUVER SCHEDULE

ID	Manufacturer	Model	CFM	Size	Velocity (fpm)	Free Area (sf)	Pressure Drop	Notes
L-1	RUSKIN	ELF6375DX	200	27"x27"	78	2.56	0.00	1 - 2

NOTES:
1. COORDINATE FINAL FINISH WITH ARCHITECT
2. LOUVER SHALL BE LOCATED AT WINDOW TO BE REMOVED. CONFIRM FINAL DIMENSIONS OF OPENING PRIOR TO ORDERING LOUVER.

EXHAUST HOOD SCHEDULE

ID	Location	Manufacturer	Model	Max Temp.	Length	Width	Filter	Light	Weight Lbs.	Notes
EH-1	KITCHEN	CAPTIVEAIRE	6024 ND-2	600°F	14' - 0"	5' - 0"	CAPTRATE SOLO	RECESSED ROUND	1,000	1 - 10
EH-2	KITCHEN	CAPTIVEAIRE	4224 VHB-G	700°F	3' - 6"	3' - 6"	--	--	250	

NOTES:
1. PROVIDE WITH EXTERNAL FACTORY EXTERNAL SUPPLY PLENUM FOR MAU AIR.
2. UL 710 LISTED WITHOUT EXHAUST FIRE DAMPER.
3. PERFORMANCE ENHANCING LIP.
4. 3" WIDE INTEGRAL AIR SPACE ON BACK.
5. REMOVABLE GREASE CUP WITH CONCEALED GREASE TROUGH IN INTEGRAL AIR SPACE.
6. ANSUL R-102 FIRE SUPPRESION SYSTEM.
7. 430 SS 100% CONSTRUCTION WITH GALVANIZED STEEL HANGER BRACKETS.
8. EMBOSSED STAINLESS STEEL FINISH.
9. FACTORY MOUNTED EXHAUST COLLARS.
10. 403 SS WITH GALVANIZED STEEL HANGER BRACKETS.

EXHAUST FAN SCHEDULE

ID	Location	Manufacturer	Model	CFM	S.P.	Fan Drive	Service	Motor HP	FLA	Weight (lbs)	Notes
EF-1	ROOF	CAPTIVEAIRE	USBI13DD-RM	3,043	1.0	DIRECT	208/3/60	1.5	4.4	300	1 - 2
EF-2	ROOF	CAPTIVEAIRE	DU30HFA	525	0.5	DIRECT	115/1/60	0.25	3.0	125	2
EF-3	MENS RR	GREENHECK	CSP-A390-VG	280	0.25	DIRECT	115/1/60	--	1.5	30	3
EF-4	JAN AND WOMEN'S RR	GREENHECK	SQ-98-VG	265	0.75	DIRECT	115/1/60	1/4	2.85	75	4

NOTES:
1. VERTICAL UPPER LEFT DISCHARGE WITH CW INLET FLANGED GREASE DUCT CONNECTION, 24" DISCHARGE EXTENSION, GREASE TRAP WITH DRAIN CONNECTION AND HEAT BAFFLE.
2. INTERLOCK WITH CAPTIVE AIRE CONTROLS
3. CEILING EXHAUST FAN WITH MANUFACTURER'S ROOF JACK
4. INLINE EXHAUST FAN LOCATED ABOVE BALCONY CEILING.

AIR INLET SCHEDULE

ID	Manufacturer	Model	Mounting	Module Size	Face Size	Neck Size	Material	Finish	Notes
1	TITUS	50F	LAY-IN	24" x 24"	18" x 18"	SEE PLANS	ALUMINUM	#26 WHITE	1
2	TITUS	50F	SURFACE	12" x 12"	12" x 12"	SEE PLANS	ALUMINUM	#26 WHITE	1
3	TITUS	355RL	WALL	18" x 18"	18" x 18"	--	STEEL	#26 WHITE	2 - 3

NOTES:
1. EGGCRATE RETURN GRILLE.
2. STEEL LOUVERED RETURN GRILLE.
3. 1/2" BLADE SPACING, 35° DEFLECTION, BLADES PARALLEL TO LONG DIMENSION.

AIR OUTLET SCHEDULE

ID	Manufacturer	Model	Mounting	Module Size	Face Size	Neck Size	Material	Finish	Notes
A	TITUS	272FL	WALL	16" x 8"	16" x 8"	--	STEEL	#26 WHITE	1
B	TITUS	TDC	SURFACE	12" x 12"	12" x 12"	SEE PLANS	STEEL	#26 WHITE	2
C	TITUS	TDC	LAY-IN	24" x 24"	18" x 18"	SEE PLANS	STEEL	#26 WHITE	2
D	TITUS	PAS	LAY-IN	24" x 24"	18" x 18"	SEE PLANS	STEEL	#26 WHITE	3

NOTES:
1. AEROBLADE DOUBLE DEFLECTION SUPPLE GRILLE, 3/4" BLADE SPACING.
2. 4-WAY THROW.
3. PERFORATED FACE.

HIGH VOLUME LOW SPEED FAN SCHEDULE

				Fan			Electrical Data		
ID	Manufacturer	Model	Series	Diameter	RPM	Watts	Service	Weight (lbs)	Notes
HVLS-1	BIG ASS FANS	MK-I61-05	INDOOR I6	5 FEET	140	36	208/1/60	40	1 - 5
HVLS-2	BIG ASS FANS	MK-I61-05	INDOOR I6	5 FEET	140	36	208/1/60	40	1 - 5
HVLS-3	BIG ASS FANS	MK-I61-05	INDOOR I6	5 FEET	140	36	208/1/60	40	1 - 5
HVLS-4	BIG ASS FANS	MK-I61-05	INDOOR I6	5 FEET	140	36	208/1/60	40	1 - 5
HVLS-5	BIG ASS FANS	MK-I61-05	INDOOR I6	5 FEET	140	36	208/1/60	40	1 - 5
HVLS-6	BIG ASS FANS	MK-I61-05	INDOOR I6	5 FEET	140	36	208/1/60	40	1 - 5
HVLS-7	BIG ASS FANS	MK-I61-05	INDOOR I6	5 FEET	140	36	208/1/60	40	1 - 5
HVLS-8	BIG ASS FANS	MK-I61-05	INDOOR I6	5 FEET	140	36	208/1/60	40	1 - 5

NOTES:
1. FIXED WALL MOUNT CONTROLLER.
2. PROVIDE WITH 60" DOWNROD AND MOUNT AT 15'-0" ABOVE FINISHED FLOOR.
3. DIRECT DRIVE MOTOR.
4. SAFETY CABLES SHALL BE 1.5MM IN DIAMETER AND FABRICATED OUT OF AIRCRAFT STAINLESS STEEL.
5. OIL RUBBED BRONZE FINISH.

INTAKE/RELIEF HOOD SCHEDULE

ID	Manufacturer	Model	Service	CFM	Throat Size	Velocity (fpm)	Free Area (sf)	Pressure Drop	Weight (lbs.)	Notes
IH-1	GREENHECK	FGI-22X22	FC-1	1800	22"X22"	536	3.4	0.05	150	1, 2
IH-2	GREENHECK	FGI-22X22	FC-2	1800	22"X22"	536	3.4	0.05	150	1, 2
IH-3	GREENHECK	FGI-22X22	FC-3	1800	22"X22"	536	3.4	0.05	150	1, 2
IH-4	GREENHECK	FGI-22X22	FC-4	1800	22"X22"	536	3.4	0.05	150	1, 2
IH-5	GREENHECK	FGI-22X22	FC-5	1800	22"X22"	536	3.4	0.05	150	1, 2
IH-6	GREENHECK	FGI-22X22	FC-6	1800	22"X22"	536	3.4	0.05	150	1, 2
RH-1	GREENHECK	FGR-46X50	AUDITORIUM	5400	46"X50"	338	16	0.02	325	1 - 3
RH-2	GREENHECK	FGR-46X50	AUDITORIUM	5400	46"X50"	338	16	0.02	325	1 - 3
RH-3	GREENHECK	FGR-12X12	AUDITORIUM	265	12"X12"	265	1	0.01	100	1 - 3

NOTES:
1. INSECT SCREEN.
2. MANUFACTURER'S 14" ROOF CURB SLOPED TO MATCH ROOF. CONTRACTOR TO CONFIRM SLOPE PRIOR TO ORDERING.
3. COUNTERBALANCED BACKDRAFT DAMPER.

Copyright © 2025

All ideas, designs, arrangements and plans indicated or represented by this drawing are owned by, and the property of, NICHOLS, MELBURG and ROSSETTO and were created, evolved and developed for use on, and in conjunction with, the specified project. None of such ideas, designs, arrangements or plans shall be used by, or disclosed to any person, firm or corporation for any purpose whatsoever without the written permission of NICHOLS, MELBURG and ROSSETTO.

NICHOLS MELBURG & ROSSETTO
ARCHITECTS + ENGINEERS
300 KNOLLCREST DRIVE
REDDING, CA. 96002
(530) 222-3300 (530) 222-3538 FAX
http://www.nmrdesign.com

CONSULTANTS

FRONTIER
CONSULTING ENGINEERS
2727 Bechelli Lane - Redding, CA 96002
Ph: (530) 232-6160 - www.frontierce.com

LICENSE STAMPS

REGISTERED PROFESSIONAL ENGINEER
JASON J. ADAMS
No. M385--
EXP. 9-30-2025
MECHANICAL
STATE OF CALIFORNIA

PROJECT NAME

TEHAMA COUNTY
CORNING
VETERAN'S HALL

1620 SOLANO ST.
CORNING, CA

SHEET TITLE

MECHANICAL LEGEND
AND SCHEDULES

DRAWING STATUS

CONSTRUCTION
DOCUMENTS

REVISIONS

Sym.	Description	Date

Drawn By	ML
Date Issued	2/13/2025
Scale	1/8" = 1'-0"
Project No.	21-6497

SHEET No.

M100

GENERAL NOTES:

1. FIELD-VERIFY EXISTING CONSTRUCTION DEPICTED IN THESE DRAWINGS AS IT IS UNCOVERED DURING CONSTRUCTION. NOTIFY THE COUNTY PROMPTLY IF EXISTING CONDITIONS ARE NOT AS INDICATED.
2. COORDINATE DEMOLITION WORK OF ALL DISCIPLINES WITH LOCATIONS AND DIMENSIONS OF NEW CONSTRUCTION INDICATED IN THESE DRAWINGS. PRIOR TO COMMENCING ANY DEMOLITION WORK, COORDINATE WITH APPROVED SHOP DRAWINGS AND MANUFACTURER'S DATA FOR NEW SYSTEMS, EQUIPMENT, FEATURES OF CONSTRUCTION AND TEMPORARY AND FINAL CONDITIONS AS INDICATED INTHESE DOCUMENTS
3. DEMOLITION AND REMOVAL OF EXISTING CONSTRUCTION, FIXTURES, EQUIPMENT, AND FINISHES SHALL BE PERFORMED IN A NEAT, WORKMANLIKE MANNER. WITH CLEAN, STRAIGHT EDGES SUITABLE TO ACCOMMODATE NEW CONSTRUCTION, WHERE APPLICABLE.
4. ALL EXISTING CONSTRUCTION, FIXTURES, EQUIPMENT AND FINISHES TO REMAIN SHALL BE PROTECTED FROM DAMAGE DURING DEMOLITION AND NEW CONSTRUCTION.
5. REMOVE ALL MECHANICAL EQUIPMENT, PUMPS, HYDRONIC PIPING, DUCTING, SENSORS, VALVES, FITTINGS, RADIANT HEATERS, FLUES, CONTROLS, CONDENSING UNITS, PACKAGED UNITS, CONDENSATE PIPING, OVERHEAD FANS, EXHAUST HOODS, REGISTERS, EQUIPMENT SUPPORTS AND HANGERS UNLESS OTHERWISE NOTED.

KEYED NOTES:

1. EXISTING BOILER TO BE REMOVED. REMOVE ALL BOILER SYSTEM PUMPS, RADIANT HEATERS, HYDRONIC PIPING, EXPANSION TANKS, SUPPORTS, ELECTRICAL CONNECTIONS, GAS PIPING, FLUES, WIRING, DISCONNECTS, AND CONTROLS. PATCH ALL FLOOR, WALL AND ROOF OPENINGS TO MATCH EXISTING.
2. REMOVE DX/FURNACES, FAN COILS, CONDENSING UNITS, PACKAGED ROOFTOP UNIT AND ALL ASSOCIATED AIR TERMINALS, DUCTING, REFRIGERANT PIPING, THERMOSTATS, FLUE PIPING, CONTROLS, WIRING, SUPPORTS, CONDENSATE PIPING, GAS PIPING BACK TO MAIN. PATCH WALLS AND ROOF TO MATCH EXISTING.
3. REMOVE OVERHEAD FAN AND ASSOCIATED CONTROLS, WIRING, AND SUPPORTS.
4. REMOVE EXHAUST HOOD AND/OR EXHAUST FAN AND ASSOCIATED DUCTING, CONTROLS, WIRING, AND SUPPORTS. PATCH WALL AND ROOF OPENINGS TO MATCH EXISTING
5. REMOVE ROOFTOP HOOD OR VENT AND ASSOCIATED DUCTING AND AIR TERMINALS AND PATCH ROOF TO MATCH EXISTING.

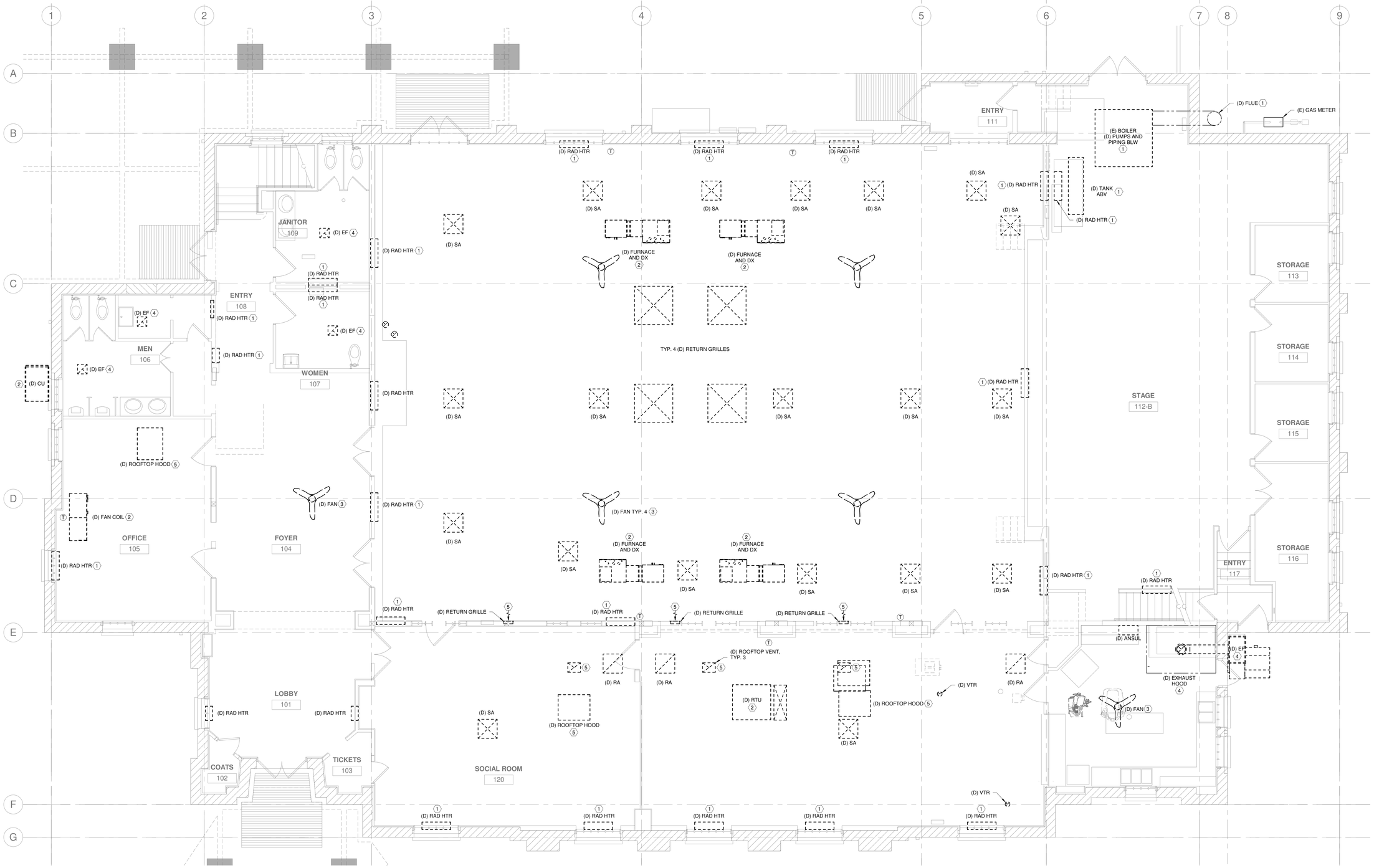

1 M200 MECHANICAL DEMOLITION FIRST FLOOR PLAN
1/4" = 1'-0"

N

Copyright © 2025
All ideas, designs, arrangements and plans indicated or represented by this drawing are owned by, and the property of, NICHOLS, MELBURG and ROSSETTO and were created, evolved and developed for use on, and in conjunction with, the specified project. None of such ideas, designs, arrangements or plans shall be used by, or disclosed to any person, firm or corporation for any purpose whatsoever without the written permission of NICHOLS, MELBURG and ROSSETTO.

NICHOLS MELBURG & ROSSETTO
ARCHITECTS + ENGINEERS
300 KNOLLCREST DRIVE
REDDING, CA 96002
(530) 222-3300 (530) 222-3538 FAX
http://www.nmrdesign.com

CONSULTANTS

FRONTIER CONSULTING ENGINEERS
2727 Bechelli Lane · Redding, CA 96002
Ph. (530) 232-6160 · www.frontierce.com

LICENSE STAMPS

REGISTERED PROFESSIONAL ENGINEER JASON T. HUNTER M38924 EXP. 9-30-2025 MECHANICAL STATE OF CALIFORNIA

PROJECT NAME

TEHAMA COUNTY CORNING VETERAN'S HALL

1620 SOLANO ST.
CORNING, CA

SHEET TITLE

MECHANICAL DEMOLITION FIRST FLOOR PLAN

DRAWING STATUS

CONSTRUCTION DOCUMENTS

REVISIONS

Sym.	Description	Date

Drawn By	ML
Date Issued	2/13/2025
Scale	1/4" = 1'-0"
Project No.	21-6497

SHEET No.

M200

GENERAL NOTES:

1. FIELD-VERIFY EXISTING CONSTRUCTION DEPICTED IN THESE DRAWINGS AS IT IS UNCOVERED DURING CONSTRUCTION. NOTIFY THE COUNTY PROMPTLY IF EXISTING CONDITIONS ARE NOT AS INDICATED.
2. COORDINATE DEMOLITION WORK OF ALL DISCIPLINES WITH LOCATIONS AND DIMENSIONS OF NEW CONSTRUCTION INDICATED IN THESE DRAWINGS. PRIOR TO COMMENCING ANY DEMOLITION WORK, COORDINATE WITH APPROVED SHOP DRAWINGS AND MANUFACTURER'S DATA FOR NEW SYSTEMS, EQUIPMENT, FEATURES OF CONSTRUCTION AND TEMPORARY AND FINAL CONDITIONS AS INDICATED INTHESE DOCUMENTS
3. DEMOLITION AND REMOVAL OF EXISTING CONSTRUCTION, FIXTURES, EQUIPMENT, AND FINISHES SHALL BE PERFORMED IN A NEAT, WORKMANLIKE MANNER, WITH CLEAN, STRAIGHT EDGES SUITABLE TO ACCOMMODATE NEW CONSTRUCTION, WHERE APPLICABLE.
4. ALL EXISTING CONSTRUCTION, FIXTURES, EQUIPMENT AND FINISHES TO REMAIN SHALL BE PROTECTED FROM DAMAGE DURING DEMOLITION AND NEW CONSTRUCTION.
5. REMOVE ALL MECHANICAL EQUIPMENT, PUMPS, HYDRONIC PIPING, DUCTING, SENSORS, VALVES, FITTINGS, RADIANT HEATERS, FLUES, CONTROLS, CONDENSING UNITS, PACKAGED UNITS, CONDENSATE PIPING, OVERHEAD FANS, EXHAUST HOODS, REGISTERS, EQUIPMENT SUPPORTS AND HANGERS UNLESS OTHERWISE NOTED.

KEYED NOTES:

1. REMOVE CONDENSING UNIT AND ALL ASSOCIATED REFRIGERANT PIPING, THERMOSTATS, CONTROLS, WIRING, AND SUPPORTS. PATCH ROOF TO MATCH EXISTING
2. REMOVE ROOFTOP HOOD OR VENT AND ASSOCIATED DUCTING AND AIR TERMINALS AND PATCH ROOF TO MATCH EXISTING.
3. REMOVE ROOFTOP CONDENSATE AND FLUE. PATCH ROOF TO MATCH EXISTING.

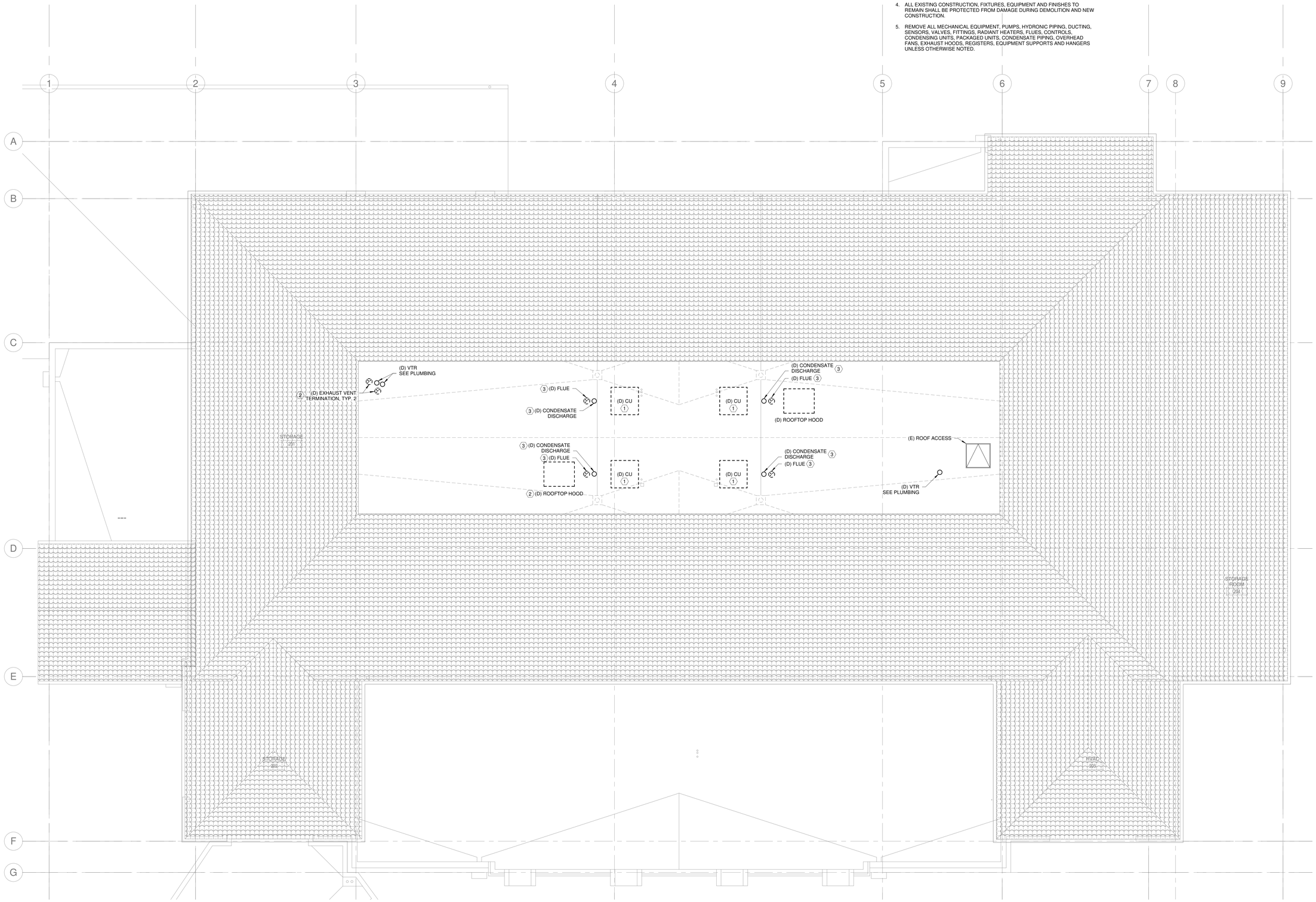

1 M201 MECHANICAL DEMOLITION ROOF PLAN
1/4" = 1'-0"

N

Copyright © 2025

All ideas, designs, arrangements and plans indicated or represented by this drawing are owned by, and the property of, NICHOLS, MELBURG and ROSSETTO and were created, evolved and developed for use on, and in conjunction with, the specified project. None of such ideas, designs, arrangements or plans shall be used by, or disclosed to any person, firm or corporation for any purpose whatsoever without the written permission of NICHOLS, MELBURG and ROSSETTO.

NICHOLS MELBURG & ROSSETTO
ARCHITECTS + ENGINEERS
300 KNOLLCREST DRIVE
REDDING, CA 96002
(530) 222-3300 (530) 222-3538 FAX
http://www.nmrdesign.com

CONSULTANTS

FRONTIER
CONSULTING ENGINEERS
2727 Bechelli Lane · Redding, CA 96002
Ph (530) 232-6160 · www.frontierce.com

LICENSE STAMPS

REGISTERED PROFESSIONAL ENGINEER
JASON T. HUNTLEY
Lic No. M38847
Exp. 9-30-2025
MECHANICAL
STATE OF CALIFORNIA

PROJECT NAME

TEHAMA COUNTY
CORNING
VETERAN'S HALL

1620 SOLANO ST.
CORNING, CA

SHEET TITLE

MECHANICAL
DEMOLITION ROOF PLAN

DRAWING STATUS

CONSTRUCTION
DOCUMENTS

REVISIONS

Sym.	Description	Date

Drawn By	ML
Date Issued	2/13/2025
Scale	1/4" = 1'-0"
Project No.	21-6497

SHEET No.

M201

GENERAL NOTES:

1. COORDINATE FINAL LOCATION WITH OWNER PRIOR TO INSTALLATION OF SWITCHES, THERMOSTATS, TEMPERATURE SENSORS AND CO2 SENSORS.
2. MOUNT SWITCHES, THERMOSTATS, TEMPERATURE SENSORS AND CO2 SENSORS AT 48" ABOVE FINISHED FLOOR.

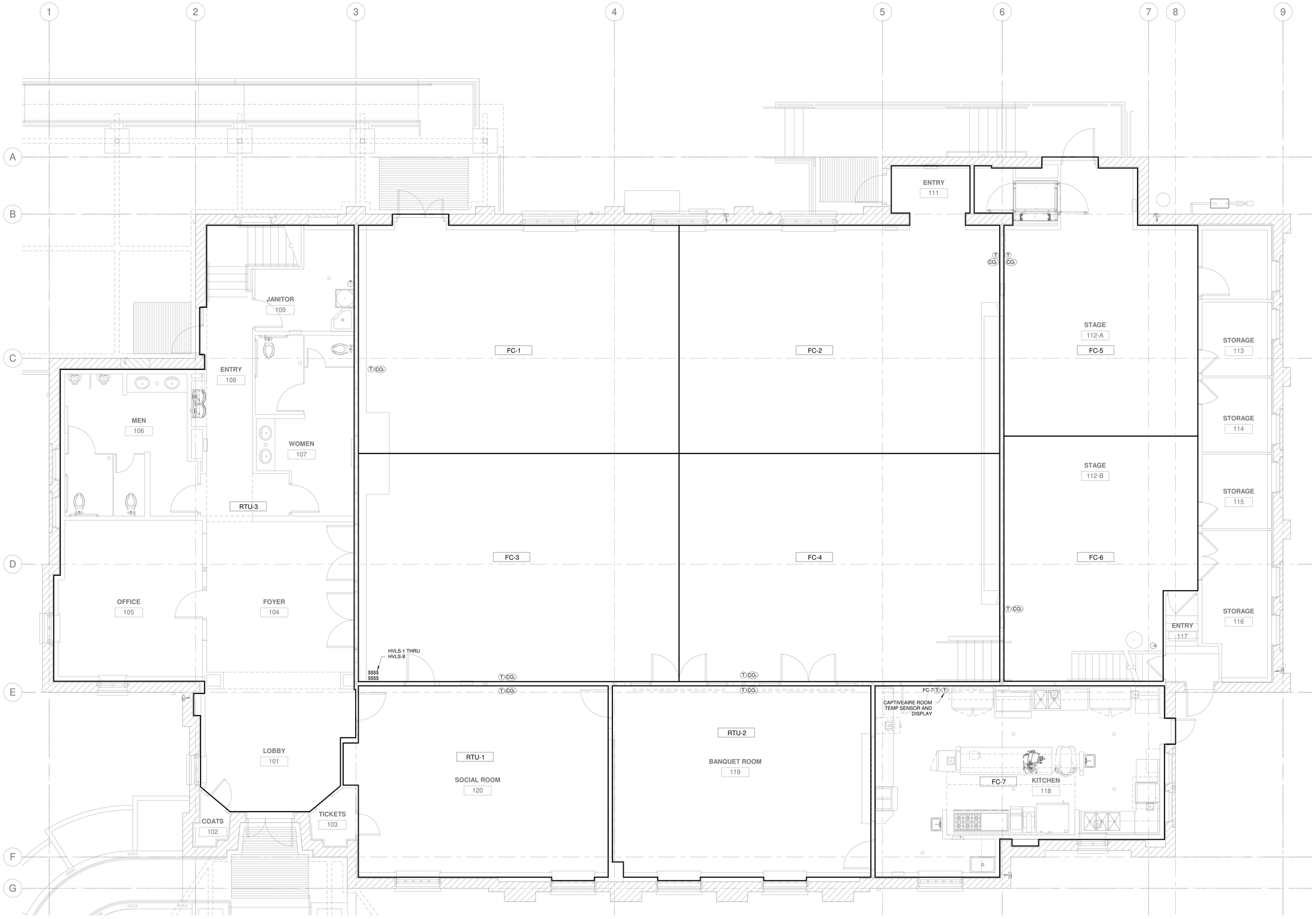

1 M210 MECHANICAL ZONING PLAN
1/4" = 1'-0"

N

Copyright © 2025

All ideas, designs, arrangements and plans indicated or represented by this drawing are owned by, and the property of, NICHOLS, MELBURG and ROSSETTO and were created, evolved and developed for use on, and in conjunction with, the specified project. None of such ideas, designs, arrangements or plans shall be used by, or disclosed to any person, firm or corporation for any purpose whatsoever without the written permission of NICHOLS, MELBURG and ROSSETTO.

NICHOLS MELBURG & ROSSETTO
ARCHITECTS + ENGINEERS
300 KNOLLCREST DRIVE
REDDING, CA 96002
(530) 222-3300 (530) 222-3538 FAX
http://www.nmrdesign.com

CONSULTANTS

FRONTIER
CONSULTING ENGINEERS
2727 Bechelli Lane · Redding, CA 96002
Ph (530) 232-6160 · www.frontierce.com

LICENSE STAMPS

REGISTERED PROFESSIONAL ENGINEER
JASON T. ALMEIDA
Lic No. M38847
EXP. 9-30-2025
MECHANICAL
STATE OF CALIFORNIA

PROJECT NAME

TEHAMA COUNTY CORNING VETERAN'S HALL

1620 SOLANO ST.
CORNING, CA

SHEET TITLE

MECHANICAL ZONING PLAN

DRAWING STATUS

CONSTRUCTION DOCUMENTS

REVISIONS

Sym.	Description	Date

Drawn By	ML
Date Issued	2/13/2025
Scale	1/4" = 1'-0"
Project No.	21-6497

SHEET No.

M210

GENERAL NOTES:

1. PRIOR TO INSTALLATION, COORDINATE ALL EQUIPMENT LOCATIONS AND DUCT PATHWAYS WITH ROOF PENETRATIONS, STORM DRAINAGE PIPING AND SERVICE CLEARANCES. MAINTAIN AN ACCESSIBLE PATHWAY TO AND FROM EQUIPMENT FOR EQUIPMENT SERVICING. EQUIPMENT SHALL BE HUNG AS HIGH AS POSSIBLE TO MAXIMIZE CONDENSATE DRAINAGE RUN LENGTHS. COORDINATE WITH ALL TRADES.

2. PROVIDE GREASE EXHAUST DUCT CLEANOUTS AT DUCT CHANGES OF DIRECTION AND ACCESS PANEL. GREASE DUCT CLEANOUTS OPENINGS SHALL BE LOCATED AT THE SIDES OF TOP OF THE DUCT, WHICHEVER IS MOST ACCESSIBLE. ACCESS PANELS FOR GREASE DUCT CLEANOUTS SHALL BE OF THE SAME MATERIAL AND THICKNESS AS DUCT, SHALL HAVE A GASKET OR SEALANT THAT IS RATED FOR 1500°F AND SHALL BE LIQUID TIGHT. GREASE DUCTING SHALL SLOPE BACK TO HOOD AT 1/4" PER LINEAR FOOT.

KEYED NOTES:

1. WALL MOUNTED UTILITY FIRE AND ANSUL CABINET.
2. RELIEF GRILLES AND DUCTING UP TO RELIEF HOOD. DUCTING SHALL BE FULL SIZE OF HOOD THROAT BUT SHALL SPLIT BETWEEN EXISTING ROOF FRAMING MEMBERS.
3. TWO (2) 1" INSULATED 20"X8" OUTSIDE AIR DUCTS FROM INTAKE HOOD, SPLIT AROUND BDL 2X8 ROOF FRAMING INTO ONE (1) 18"X18" OUTSIDE AIR BELOW FRAMING DOWN TO ECONOMIZING MIXING BOX.

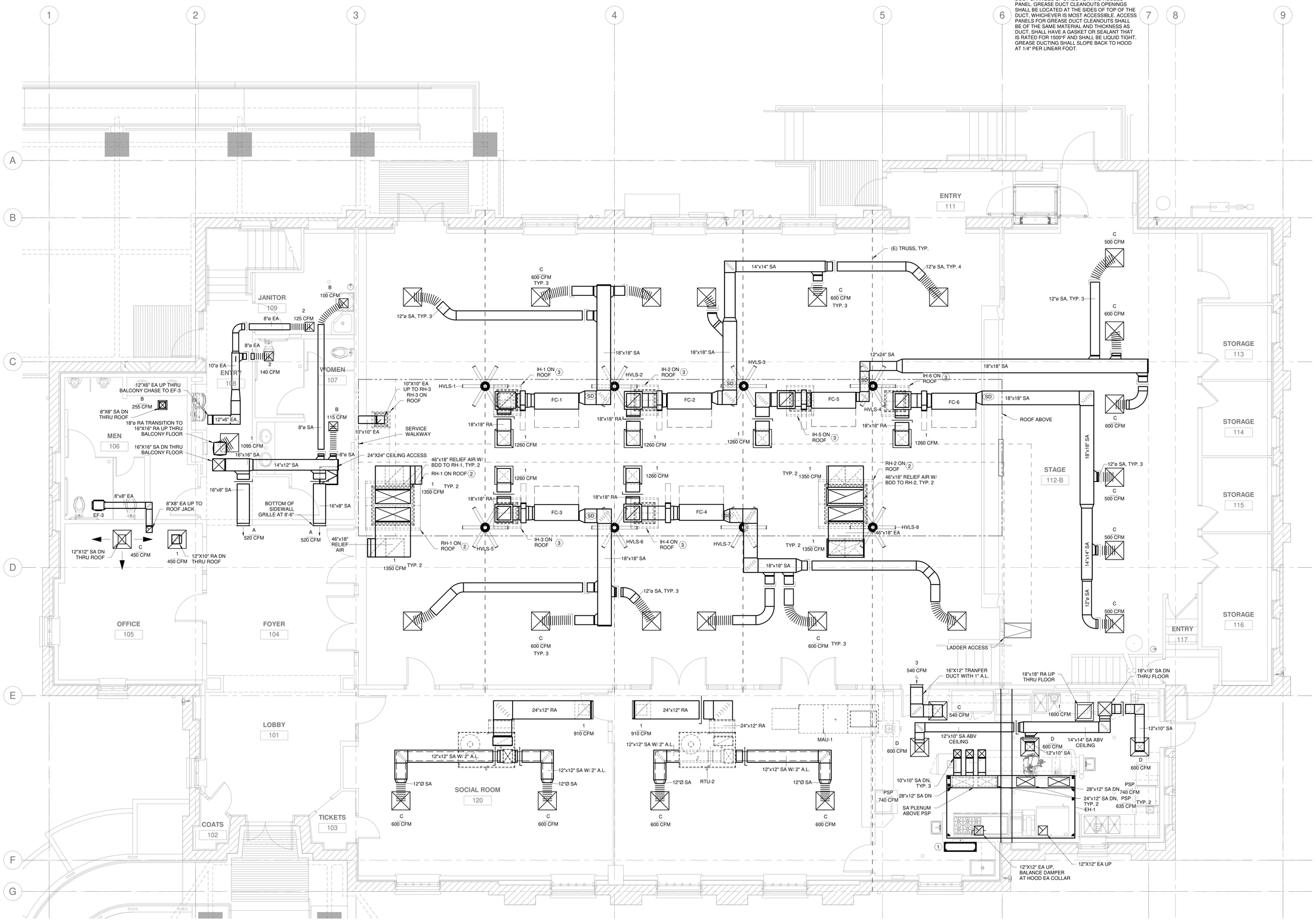

1 M211 MECHANICAL FIRST FLOOR PLAN
1/4" = 1'-0"

N

Copyright © 2025
All ideas, designs, arrangements and plans indicated or represented by this drawing are owned by, and the property of, NICHOLS, MELBURG and ROSSETTO and were created, evolved and developed for use on, and in conjunction with, the specified project. None of such ideas, designs, arrangements or plans shall be used by, or disclosed to any person, firm or corporation for any purpose whatsoever without the written permission of NICHOLS, MELBURG and ROSSETTO.

NICHOLS MELBURG & ROSSETTO
ARCHITECTS + ENGINEERS
300 KNOLLCREST DRIVE
REDDING, CA 96002
(530) 222-3300 (530) 222-3538 FAX
http://www.nmrdesign.com

CONSULTANTS

FRONTIER CONSULTING ENGINEERS
2727 Bechelli Lane · Redding, CA 96002
Ph. (530) 232-6160 · www.frontierce.com

LICENSE STAMPS

REGISTERED PROFESSIONAL ENGINEER JASON J. ALMEIDA M38947 EXP. 9-30-2025 MECHANICAL STATE OF CALIFORNIA

PROJECT NAME

TEHAMA COUNTY CORNING VETERAN'S HALL

1620 SOLANO ST.
CORNING, CA

SHEET TITLE

MECHANICAL FIRST FLOOR PLAN

DRAWING STATUS

CONSTRUCTION DOCUMENTS

REVISIONS

Sym.	Description	Date

Drawn By	ML
Date Issued	2/13/2025
Scale	1/4" = 1'-0"
Project No.	21-6497

SHEET No.

M211

GENERAL NOTES:

1. PRIOR TO INSTALLATION, COORDINATE ALL EQUIPMENT LOCATIONS AND DUCT PATHWAYS WITH ROOF PENETRATIONS, STORM DRAINAGE PIPING AND SERVICE CLEARANCES. MAINTAIN AN ACCESSIBLE PATHWAY TO AND FROM EQUIPMENT FOR EQUIPMENT SERVICING. EQUIPMENT SHALL BE HUNG AS HIGH AS POSSIBLE TO MAXIMIZE CONDENSATE DRAINAGE RUN LENGTHS. COORDINATE WITH ALL TRADES.
2. PROVIDE GREASE EXHAUST DUCT CLEANOUTS AT DUCT CHANGES OF DIRECTION AND ACCESS PANEL. GREASE DUCT CLEANOUTS OPENINGS SHALL BE LOCATED AT THE SIDES OF TOP OF THE DUCT, WHICHEVER IS MOST ACCESSIBLE. ACCESS PANELS FOR GREASE DUCT CLEANOUTS SHALL BE OF THE SAME MATERIAL AND THICKNESS AS DUCT, SHALL HAVE A GASKET OR SEALANT THAT IS RATED FOR 1500° F AND SHALL BE LIQUID TIGHT. GREASE DUCTING SHALL SLOPE BACK TO HOOD AT 1/4" PER LINEAR FOOT.
3. ALL EQUIPMENT AND ROOF DUCT PENERATRIONS SHALL BE A MINIMUM OF 12" FROM EDGE OF ROOF AND FACE OF EXTERIOR WALL.

KEYED NOTES:

1. DUCTING THROUGH EXISTING WINDOW OPENING. MODIFY EXTERIOR WALL AS REQUIRED TO ACCOMMODATE DUCT PENETRATION. SEE EXTERIOR WALL DUCT PENETRATION DETAIL ON M301.
2. MODIFY BALCONY FRAMING AS REQUIRED TO FRAME OUT OPENING FOR DUCT PENETRATION THROUGH FLOOR.
3. FC-7 SHALL BE ORIENTED IN DOWN DISCHARGE ORIENTATION.
4. RL/RS DOWN THRU ROOF AND ROUTED TO FC-7.

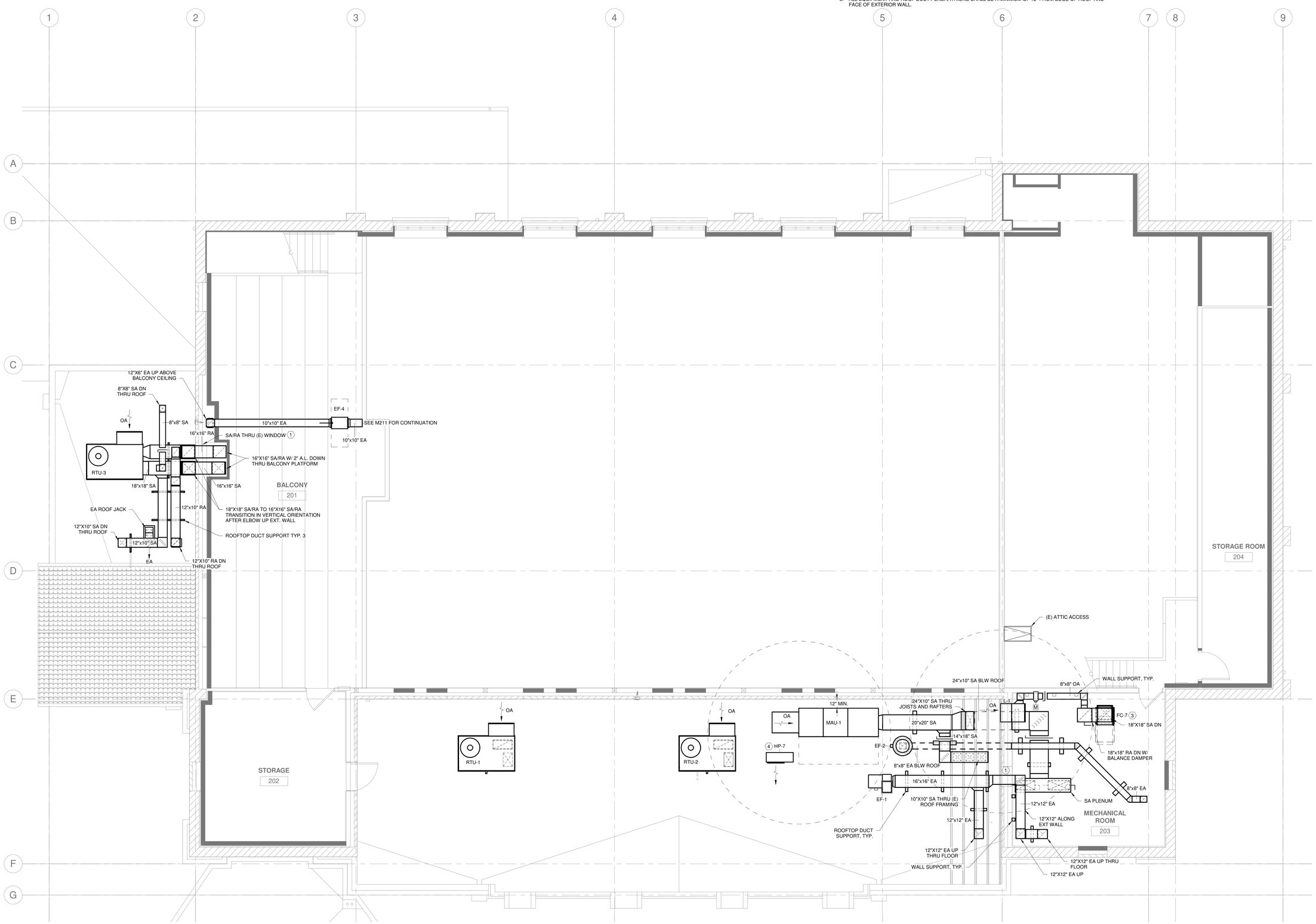

1 M212 MECHANICAL SECOND FLOOR PLAN
1/4" = 1'-0"

N

Copyright © 2025

All ideas, designs, arrangements and plans indicated or represented by this drawing are owned by, and the property of, NICHOLS, MELBURG and ROSSETTO and were created, evolved and developed for use on, and in conjunction with, the specified project. None of such ideas, designs, arrangements or plans shall be used by, or disclosed to any person, firm or corporation for any purpose whatsoever without the written permission of NICHOLS, MELBURG and ROSSETTO.

NICHOLS MELBURG & ROSSETTO
ARCHITECTS + ENGINEERS
300 KNOLLCREST DRIVE
REDDING, CA. 96002
(530) 222-3300 (530) 222-3538 FAX
http://www.nmrdesign.com

CONSULTANTS

FRONTIER
CONSULTING ENGINEERS
2727 Bechelli Lane · Redding, CA 96002
Ph. (530) 232-6160 · www.frontierce.com

LICENSE STAMPS

REGISTERED PROFESSIONAL ENGINEER
JASON J. ADAMS
Reg. No. M38924
EXP. 9-30-2025
MECHANICAL
STATE OF CALIFORNIA

PROJECT NAME

TEHAMA COUNTY CORNING VETERAN'S HALL

1620 SOLANO ST.
CORNING, CA

SHEET TITLE

MECHANICAL SECOND FLOOR PLAN

DRAWING STATUS

CONSTRUCTION DOCUMENTS

REVISIONS

Sym.	Description	Date

Drawn By	ML
Date Issued	2/13/2025
Scale	1/4" = 1'-0"
Project No.	21-6497

SHEET No.

M212

KEYED NOTES:

1 RL/RS DOWN THRU ROOF TO FAN COIL BELOW.

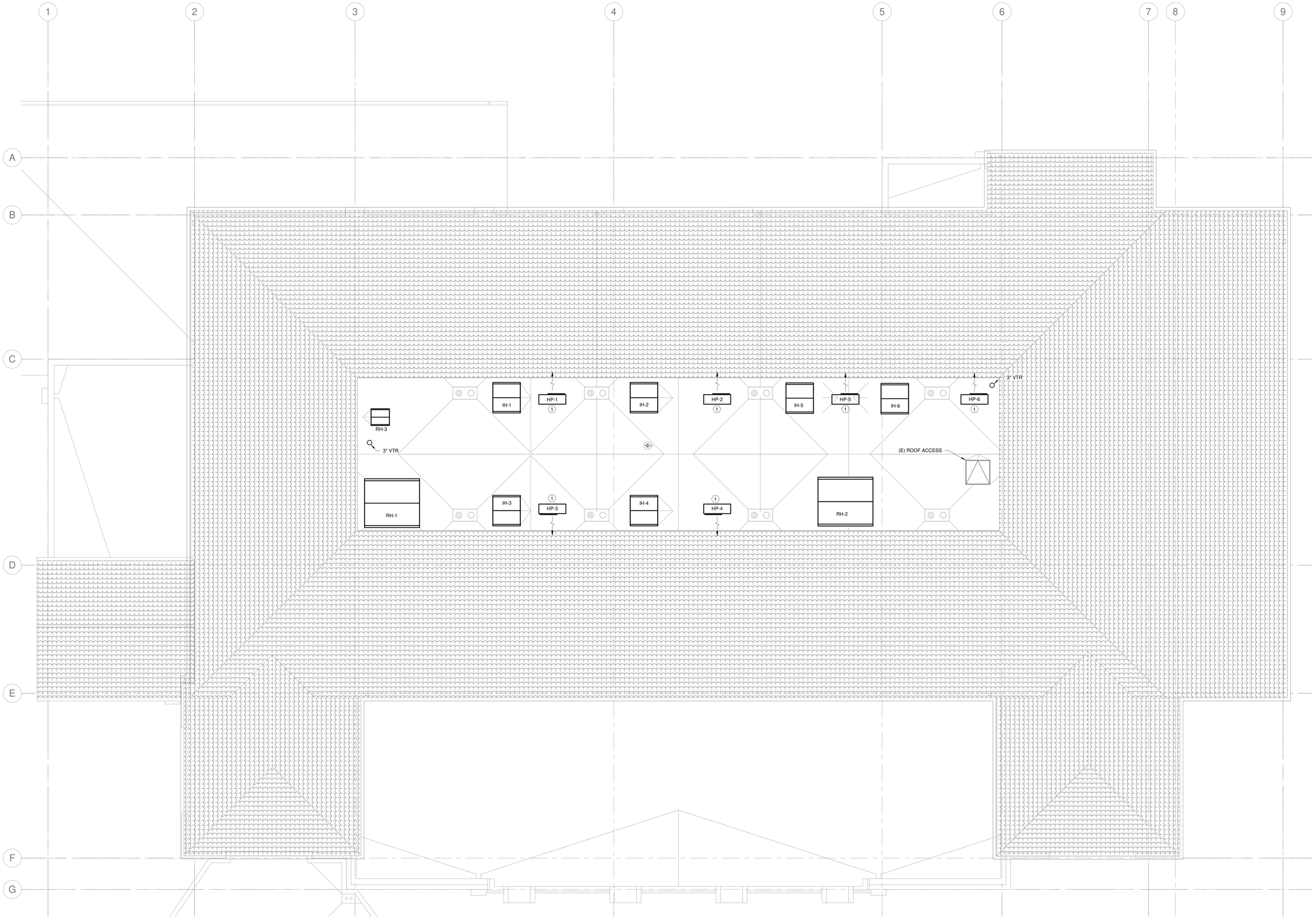

1 M240 MECHANICAL ROOF PLAN
1/4" = 1'-0"

N

Copyright © 2025

All ideas, designs, arrangements and plans indicated or represented by this drawing are owned by, and the property of, NICHOLS, MELBURG and ROSSETTO and were created, evolved and developed for use on, and in conjunction with, the specified project. None of such ideas, designs, arrangements or plans shall be used by, or disclosed to any person, firm or corporation for any purpose whatsoever without the written permission of NICHOLS, MELBURG and ROSSETTO.

NICHOLS MELBURG & ROSSETTO
ARCHITECTS + ENGINEERS
300 KNOLLCREST DRIVE
REDDING, CA. 96002
(530) 222-3300 (530) 222-3538 FAX
http://www.nmrdesign.com

CONSULTANTS

FRONTIER
CONSULTING ENGINEERS
2727 Bechelli Lane · Redding, CA 96002
Ph. (530) 232-6160 · www.frontierce.com

LICENSE STAMPS

REGISTERED PROFESSIONAL ENGINEER
JASON J. ADAMS
Reg. No. M38874
EXP. 9-30-2025
MECHANICAL
STATE OF CALIFORNIA

PROJECT NAME

TEHAMA COUNTY
CORNING
VETERAN'S HALL

1620 SOLANO ST.
CORNING, CA

SHEET TITLE

MECHANICAL ROOF PLAN

DRAWING STATUS

CONSTRUCTION DOCUMENTS

REVISIONS

Sym.	Description	Date

Drawn By	ML
Date Issued	2/13/2025
Scale	1/4" = 1'-0"
Project No.	21-6497

SHEET No.

M240

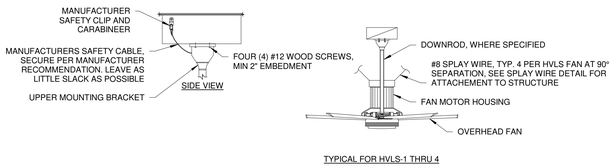

3 M300 OVERHEAD FAN DETAIL
NOT TO SCALE

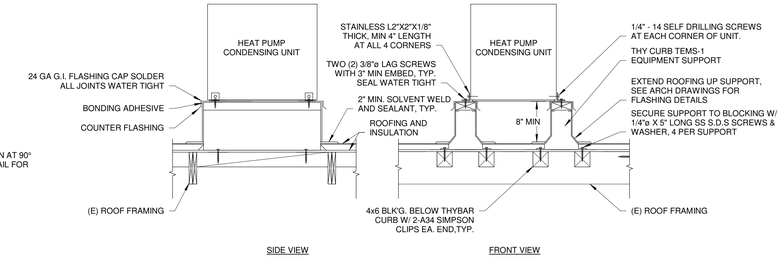

2 M300 CONDENSING UNIT MOUNTING DETAIL
NOT TO SCALE

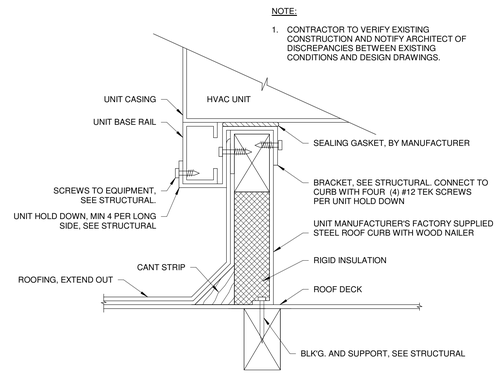

1 M300 EQUIPMENT ROOF CURB DETAIL
NOT TO SCALE

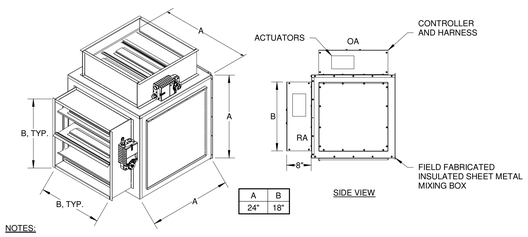

A	B
24"	18"

NOTES:

1. ECONOMIZER OPERATIONS SHALL MEET REQUIREMENTS OF CALIFORNIA ENERGY CODE SECTIONS 120.2(i), 120.5(a)4, 140.4(d), AND 140.4(e).
2. ECONOMIZER OUTDOOR AIR AND RETURN AIR DAMPERS SHALL HAVE A MAXIMUM LEAKAGE RATE OF 10 CFM/SF AT 1.0 IN. OF WATER WHEN TESTED IN ACCORDANCE WITH AMCA STANDARD 500-D. THE ECONOMIZER OUTSIDE AIR AND RETURN AIR DAMPER LEAKAGE RATES SHALL BE CERTIFIED TO THE ENERGY COMMISSION IN ACCORDANCE WITH SECTION 110.0.1. SPACE RELIEF PROVISIONS SHALL BE REQUIRED.
3. PROVIDE WITH ADJUSTABLE DRY BULB TEMPERATURE SENSORS, OUTSIDE AIR, MIXED AIR, RETURN AIR AND DISCHARGE AIR.
4. DAMPER AND ACTUATOR SHALL REMAIN ACCESSIBLE. OUTSIDE AIR AND RETURN OPENINGS SHALL BE LOCATED AS INDICATED ON PLANS.
5. PROVIDE WITH HONEYWELL JADE W7220 OR BELIMO ZIP ECONOMIZER CONTROL SYSTEM OR APPROVED EQUAL. LOCATE ECONOMIZER CONTROL BOX IN MEZZANINE.
6. ACTUATORS SHALL BE HONEYWELL, BELIMO OR APPROVED EQUAL.
7. 24 VAC POWER SHALL BE REQUIRED. COORDINATE WITH ELECTRICIAN.
8. TYPICAL FC-1 THRU FC-6.

6 M300 ECONOMIZER MIXING BOX DETAIL
NOT TO SCALE

TABLE 1				
AIRFLOW (MAX)	FILTER EFFICIENCY	FILTER SIZE	FILTER DEPTH	INITIAL P.D. (INCHES W.G.)
2000	MERV 13	24/24	4"	0.31

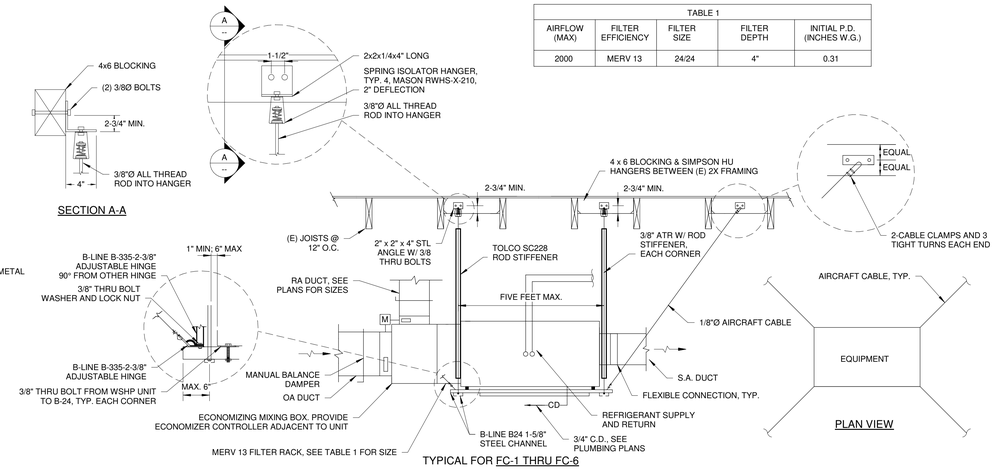

5 M300 FAN COIL UNIT HANGING DETAIL
NOT TO SCALE

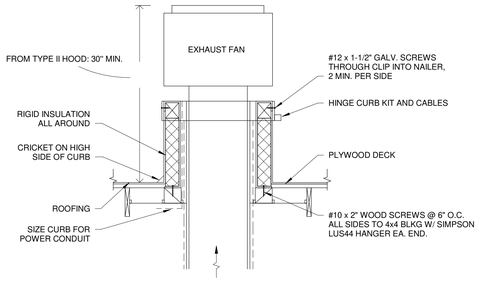

4 M300 EXHAUST FAN DETAIL
NOT TO SCALE

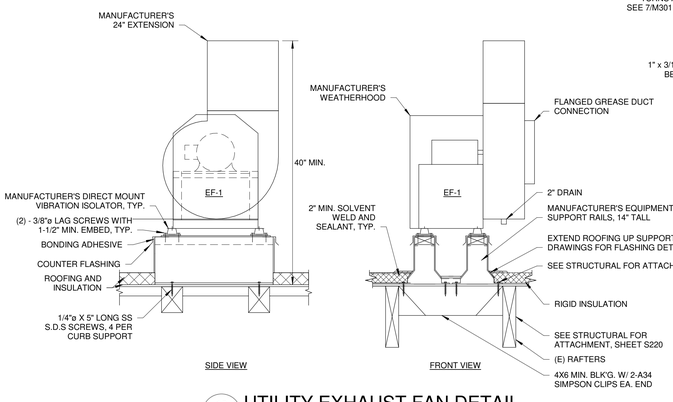

10 M300 UTILITY EXHAUST FAN DETAIL
NOT TO SCALE

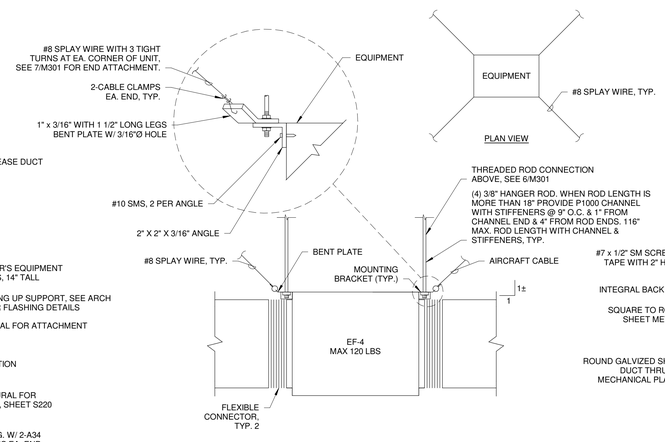

9 M300 INLINE EXHAUST FAN MOUNTING DETAIL
NOT TO SCALE

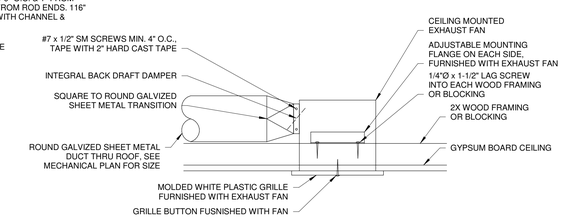

8 M300 CEILING EXHAUST FAN DETAIL
NOT TO SCALE

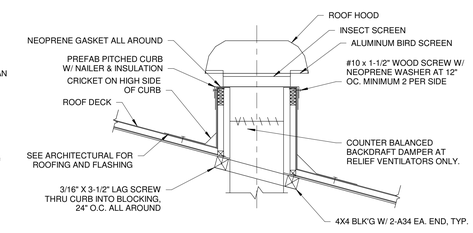

7 M300 INTAKE/RELIEF VENTILATOR DETAIL
NOT TO SCALE

Copyright © 2025
All ideas, designs, arrangements and plans indicated or represented by this drawing are owned by, and the property of, NICHOLS, MELBURG and ROSSETTO and were created, evolved and developed for use on, and in conjunction with, the specified project. None of such ideas, designs, arrangements or plans shall be used by, or disclosed to any person, firm or corporation for any purpose whatsoever without the written permission of NICHOLS, MELBURG and ROSSETTO.

NICHOLS MELBURG & ROSSETTO
ARCHITECTS + ENGINEERS
300 KNOLLCREST DRIVE
REDDING, CA 96002
(530) 222-3300 (530) 222-3538 FAX
http://www.nmrdesign.com

CONSULTANTS

FRONTIER CONSULTING ENGINEERS
2727 Bechelli Lane · Redding, CA 96002
Ph. (530) 232-6160 · www.frontierce.com

LICENSE STAMPS

REGISTERED PROFESSIONAL ENGINEER JASON T. HUNTER
Lic No. M38824
Exp. 9-30-2025
MECHANICAL
STATE OF CALIFORNIA

PROJECT NAME

TEHAMA COUNTY
CORNING
VETERAN'S HALL

1620 SOLANO ST.
CORNING, CA

SHEET TITLE

MECHANICAL DETAILS

DRAWING STATUS

CONSTRUCTION DOCUMENTS

REVISIONS

Sym.	Description	Date

Drawn By	ML
Date Issued	2/13/2025
Scale	1/8" = 1'-0"
Project No.	21-6497

SHEET No.

M300

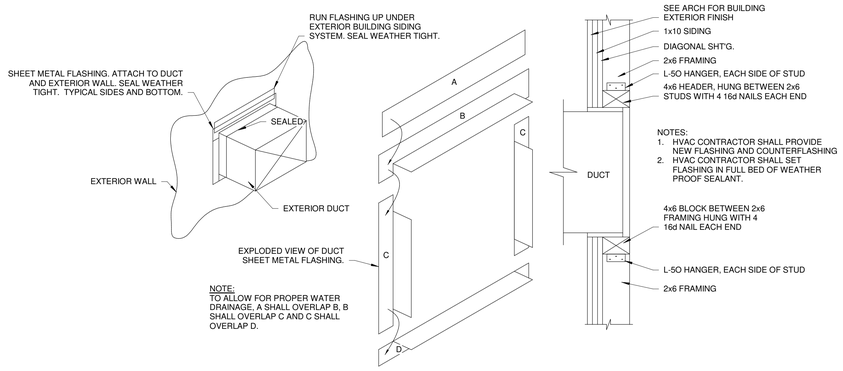

3 M301 EXTERIOR WALL DUCT PENETRATION DETAIL
NOT TO SCALE

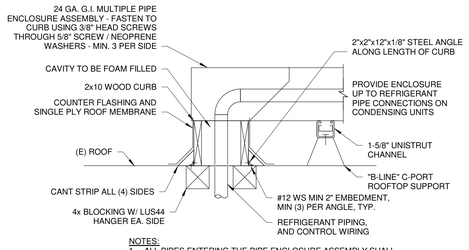

2 M301 REFRIGERANT PIPING THRU ROOF DETAIL
NOT TO SCALE

NOTE:

1. CONTRACTOR TO VERIFY EXISTING CONSTRUCTION AND NOTIFY ARCHITECT OF DISCREPANCIES BETWEEN EXISTING CONDITIONS AND DESIGN DRAWINGS.
2. CONTRACTOR SHALL INSTALL HOOD SUCH THAT THERE IS NO COMBUSTIBLE CONSTRUCTION AND MATERIALS WITHIN 18 INCHES OF ANY TYPE I EXHAUST HOOD.
3. EXHAUST FAN FOR HOOD SHALL BE ACTIVATED THROUGH INTERLOCK OF FACTORY INSTALLED TEMPERATURE SENSOR.
4. PROVIDE DUCT CLEANOUTS AT DUCT CHANGES OF DIRECTION WITH ACCESS PANEL. GREASE DUCT CLEANOUT OPENINGS SHALL BE LOCATED AT THE SIDES OR TOP OF THE DUCT, WHICHEVER IS MOST ACCESSIBLE. ACCESS PANELS FOR GREASE DUCT CLEANOUTS SHALL BE OF THE SAME MATERIAL AND THICKNESS AS DUCT, SHALL HAVE A GASKET OR SEALANT THAT IS RATED FOR 1500°F MIN. AND SHALL BE GREASE TIGHT. ACCESS PANELS SHALL BE INSTALLED PER MANUFACTURER'S INSTALLATION INSTRUCTIONS.
5. TYPE I EXHAUST DUCTING SHALL BE SLOPED AT 1/4" PER LINEAR FOOT BACK TO HOOD.

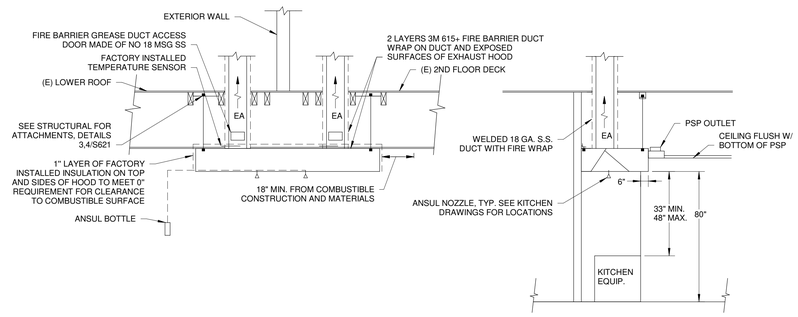

1 M301 EXHAUST HOOD SECTION DETAIL
NOT TO SCALE

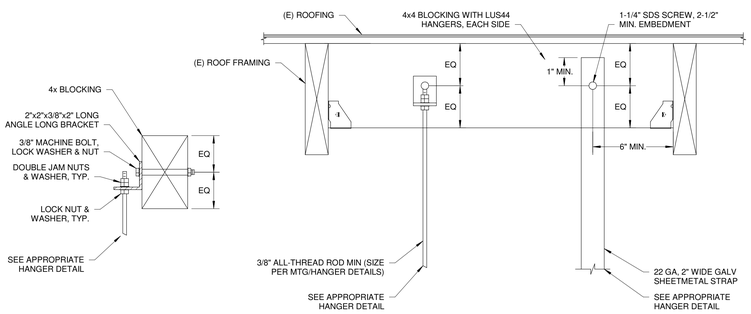

6 M301 TYPICAL DUCT HANGER CONNECTION DETAILS
NOT TO SCALE

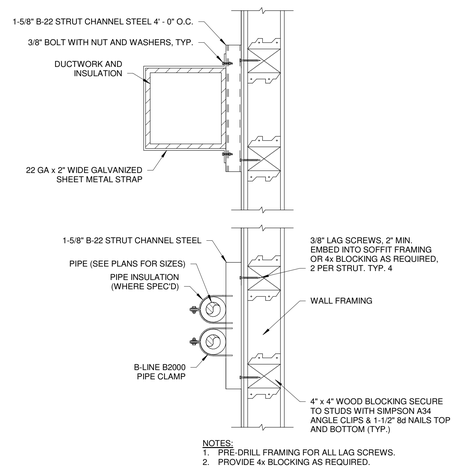

5 M301 WALL SUPPORT DETAIL
NOT TO SCALE

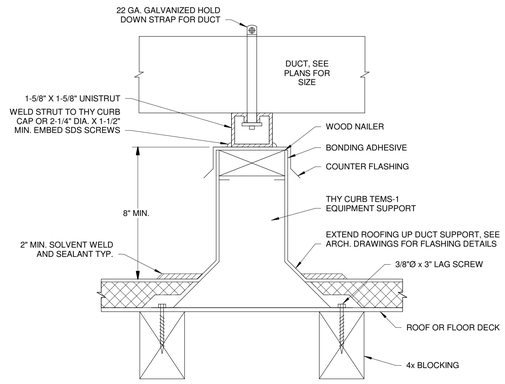

4 M301 DUCT SUPPORT DETAIL
NOT TO SCALE

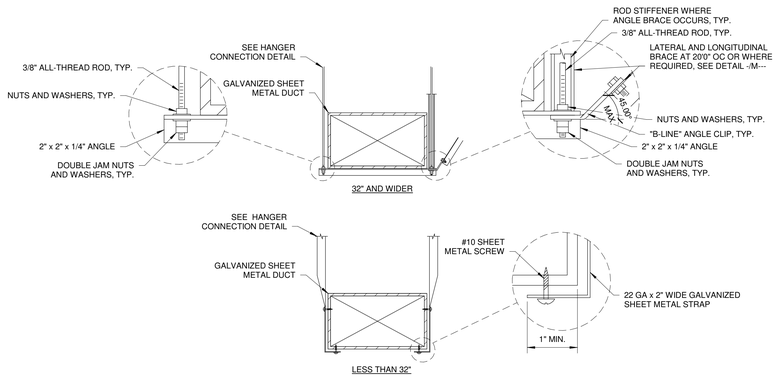

DUCT SUPPORT NOTES:

1. ALL STRAPS, RODS, TRAPEZE ANGLES AND TRAPEZE CHANNELS SHALL BE SIZED IN ACCORDANCE WITH THE LATEST SMACNA REQUIREMENTS.
2. ALL BOLTS, NUTS, SCREWS AND OTHER FASTENING DEVICES SHALL BE LOAD-RATED AND SHALL MEET ALL CODE REQUIREMENTS AND APPLICABLE SAFETY FACTORS.
3. WIRE, USED IN PLACE OF STRAPS AND RODS, IS NOT ALLOWED.
4. WHERE APPLICABLE, INSTALL INSULATION AFTER INSTALLING DUCT HANGERS.
5. LATERAL BRACING REQUIRED ON 32" WIDE AND LARGER RECTANGULAR DUCTS AND ON 18" DIAMETER AND LARGER ROUND DUCTS.
6. SUPPORTS SHALL BE PLACED AT 8'-0" ON CENTER (MAX) AND AT ALL CHANGES IN DIRECTION.

8 M301 TYPICAL DUCT HANGER DETAILS
NOT TO SCALE

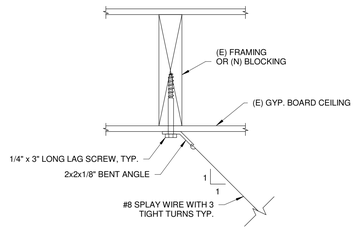

7 M301 SPLAY BRACING ATTACHMENT DETAIL
NOT TO SCALE

Copyright © 2025

All ideas, designs, arrangements and plans indicated or represented by this drawing are owned by, and the property of, NICHOLS, MELBURG and ROSSETTO and were created, evolved and developed for use on, and in conjunction with, the specified project. None of such ideas, designs, arrangements or plans shall be used by, or disclosed to any person, firm or corporation for any purpose whatsoever without the written permission of NICHOLS, MELBURG and ROSSETTO.

NICHOLS MELBURG & ROSSETTO
ARCHITECTS + ENGINEERS
300 KNOLLCREST DRIVE
REDDING, CA 96002
(530) 222-3300 (530) 222-3538 FAX
http://www.nmrdesign.com

CONSULTANTS

FRONTIER CONSULTING ENGINEERS
2727 Bechelli Lane · Redding, CA 96002
Ph. (530) 232-6160 · www.frontierce.com

LICENSE STAMPS

REGISTERED PROFESSIONAL ENGINEER
JASON T. ADAMS
Lic No. M38847
Dt: 3-30-2025
MECHANICAL
STATE OF CALIFORNIA

PROJECT NAME

TEHAMA COUNTY
CORNING
VETERAN'S HALL

1620 SOLANO ST.
CORNING, CA

SHEET TITLE

MECHANICAL DETAILS

DRAWING STATUS

CONSTRUCTION DOCUMENTS

REVISIONS

Sym.	Description	Date

Drawn By	ML
Date Issued	2/13/2025
Scale	1/8" = 1'-0"
Project No.	21-6497

SHEET No.

M301

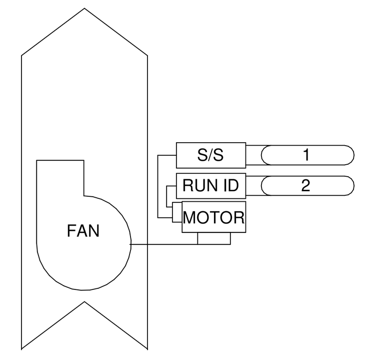

TYPICAL EXHAUST FAN SEQUENCE OF OPERATIONS:

OCCUPIED / UNOCCUPIED MODE: OCCUPIED / UNOCCUPIED MODE SHALL BE SCHEDULED BY THE FMS SYSTEM. IN THE OCCUPIED MODE THE EXHAUST FAN SHALL RUN CONTINUOUSLY. THE EXHAUST FAN SHALL BE OFF DURING UNOCCUPIED TIMES.

INTERLOCKS: EF-1 SHALL INTERLOCK WITH CAPTIVEAIRE CONTROLS, MAU-1 AND FC-7. EF-2 SHALL INTERLOCK WITH FC-4. EF-3 AND EF-4 SHALL INTERLOCK WITH RTU-3.

SAFETIES / ALARMS: WHEN ANY SENSED OUTPUT DIFFERS FROM ITS COMMANDED STATE, AN ALARM SHALL BE GENERATED BY THE FMS SYSTEM.

2 EXHAUST FAN CONTROL SCHEMATIC
M400 NOT TO SCALE

NOTES:
1. MAP ALL NEW CONTROL POINTS INTO EXISTING SERVER DATABASE. PROVIDE SCHEDULES, ALARMS, AND TRENDS PER COUNTY STANDARDS.
2. COUNTY BACNET CONFIGURATION STANDARDS SHALL BE USED TO CONFIGURE ALL NEW CONTROLLERS AND IP ROUTERS, INCLUDING INTEGRATION OF ALL DEVICES INTO DISTRICT DATABASE.
3. CONTRACTOR SHALL COORDINATE WITH FACILITY INFORMATION TECHNOLOGY PERSONNEL TO PROVIDE ALL REQUIRED MODIFICATIONS TO EXISTING BAS INFRASTRUCTURE TO IMPLEMENT CONTROL UPGRADES.
4. CONTRACTOR SHALL UPGRADE GRAPHICS INTERFACE FOR NEW EQUIPMENT IN ACCORDANCE WITH COUNTY STANDARDS.
5. CONTRACTOR SHALL PROVIDE ALL ADDITIONAL CAPACITY LICENSES AND SOFTWARE MAINTENANCE LICENSES.

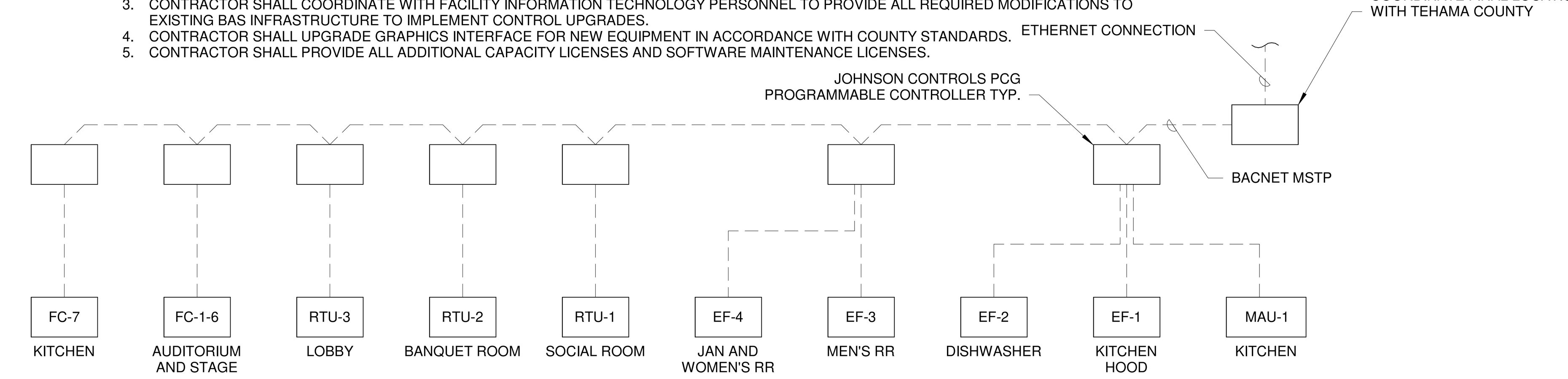

1 CONTROL SYSTEM ARCHITECTURE
M400 NOT TO SCALE

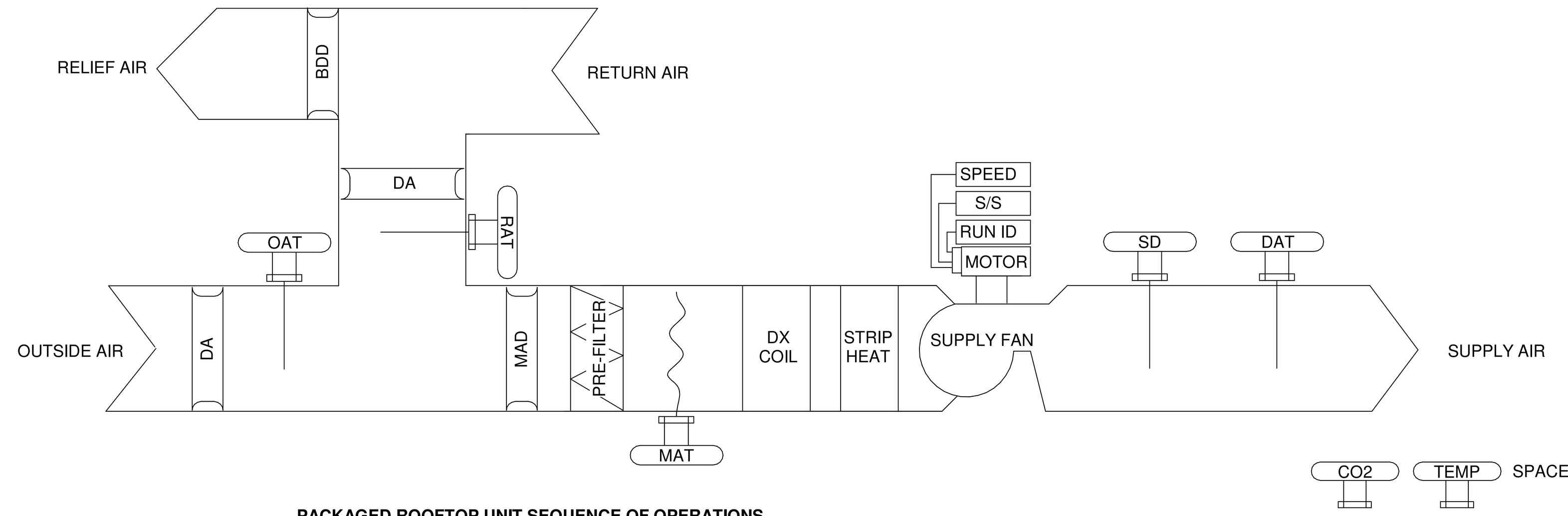

TYPICAL FOR RTU-1 THRU RTU-3

PACKAGED ROOFTOP UNIT SEQUENCE OF OPERATIONS

NOTE: UNITS ARE SPECIFIED WITH FACTORY CONTROLLERS AND BACNET INTERFACE CARDS. BAS SHALL ENABLE / DISABLE UNITS ACCORDING TO OCCUPANCY SCHEDULE, MONITOR OPERATION, GENERATE ALARMS, AND WRITE SPACE TEMPERATURE SETPOINTS. BAS SHALL ALSO OPERATE ECONOMIZER COOLING AS THE FIRST STAGE OF COOLING. OTHER CONTROL FEATURES SHALL BE PERFORMED BY FACTORY CONTROLLER.

OCCUPIED / UNOCCUPIED MODE: OCCUPIED / UNOCCUPIED MODE SHALL BE SCHEDULED BY THE BAS SYSTEM. IN THE OCCUPIED MODE, THE UNIT SHALL BE ENABLED AND SHALL RUN CONTINUOUSLY TO MAINTAIN THE SPACE HEATING SETPOINT OF 70°F(ADJ.) AND THE SPACE COOLING SETPOINT OF 75°F (ADJ.).

FAN CONTROL: THE SUPPLY FAN SHALL RUN CONTINUOUSLY DURING THE OCCUPIED MODE. THE SUPPLY FAN SHALL CYCLE ON AND OFF AS REQUIRED DURING THE UNOCCUPIED MODE TO MAINTAIN THE UNOCCUPIED HEATING SPACE SETPOINT.

ECONOMIZER COOLING: WHEN THE OUTSIDE AIR TEMPERATURE IS BELOW THE ECONOMIZER SETPOINT OF 60°F (ADJ.) AND THERE IS A CALL FOR COOLING IN THE SPACE, THE OUTSIDE AND RETURN AIR DAMPERS SHALL MODULATE TO MAINTAIN SPACE COOLING SETPOINT. WHEN THE SUPPLY FAN IS OFF, THE OUTSIDE AIR DAMPER SHALL BE CLOSED AND THE RETURN DAMPER SHALL BE FULLY OPEN. DURING OCCUPIED MODE, WHEN THE SUPPLY FAN IS ON, THE OUTSIDE AND RETURN DAMPERS SHALL INITIALLY BE POSITIONED AT THE MINIMUM SETTING REQUIRED FOR VENTILATION.

MIXED AIR DAMPER CONTROL: WHEN THE SUPPLY FAN IS OFF, THE OUTSIDE AIR DAMPER SHALL BE CLOSED AND THE RETURN DAMPER SHALL BE FULLY OPEN. DURING OCCUPIED MODE, WHEN THE SUPPLY FAN IS ON, THE OUTSIDE AND RETURN DAMPERS SHALL INITIALLY BE POSITIONED AT THE MINIMUM SETTING REQUIRED FOR VENTILATION. THE CONTROLLER SHALL START TO MODULATE THE DAMPERS OPEN BEYOND THE MINIMUM VENTILATION SETTING WHEN THE SPACE CO2 CONCENTRATION IS 100 PPM GREATER THAN THE OUTSIDE AIR CO2 CONCENTRATION. WHEN THE OUTSIDE AIR CO2 CONCENTRATION UPPER LIMIT OF 500 PPM ABOVE THE OA CO2 CONCENTRATION IS REACHED, THE OUTSIDE AIR DAMPER SHALL BE IN THE SETTING REQUIRED FOR FULL OCCUPANCY VENTILATION RATE

HEAT PUMP HEATING AND COOLING CONTROL: HEATING AND COOLING SHALL OPERATE AS REQUIRED TO MAINTAIN SPACE TEMPERATURE SETPOINT.

STRIP HEAT CONTROL: STRIP HEAT SHALL ACTIVATE WHEN SYSTEM ACTIVATES DEFROST MODE OR A SECOND STAGE OF HEATING IS REQUIRED TO MAINTAIN SPACE TEMPERATURE SETPOINT.

SAFETIES / ALARMS: IF THE DISCHARGE AIR TEMPERATURE FALLS BELOW 40°F (ADJ.), OR THE FREEZE STAT ACTIVATES, THE UNIT SHALL BE COMMANDED INTO THE UNOCCUPIED MODE AND AN ALARM SHALL BE GENERATED BY THE FMS SYSTEM. WHEN ANY CONTROL POINT DEVIATES FROM SET-POINT BY MORE THAN 5°F (ADJ.), AN ALARM SHALL BE GENERATED BY THE FMS SYSTEM. WHEN ANY SENSED OUTPUT DIFFERS FROM ITS COMMANDED STATE, AN ALARM SHALL BE GENERATED BY THE FMS SYSTEM.

4 ROOFTOP UNIT CONTROL SCHEMATIC
M400 NOT TO SCALE

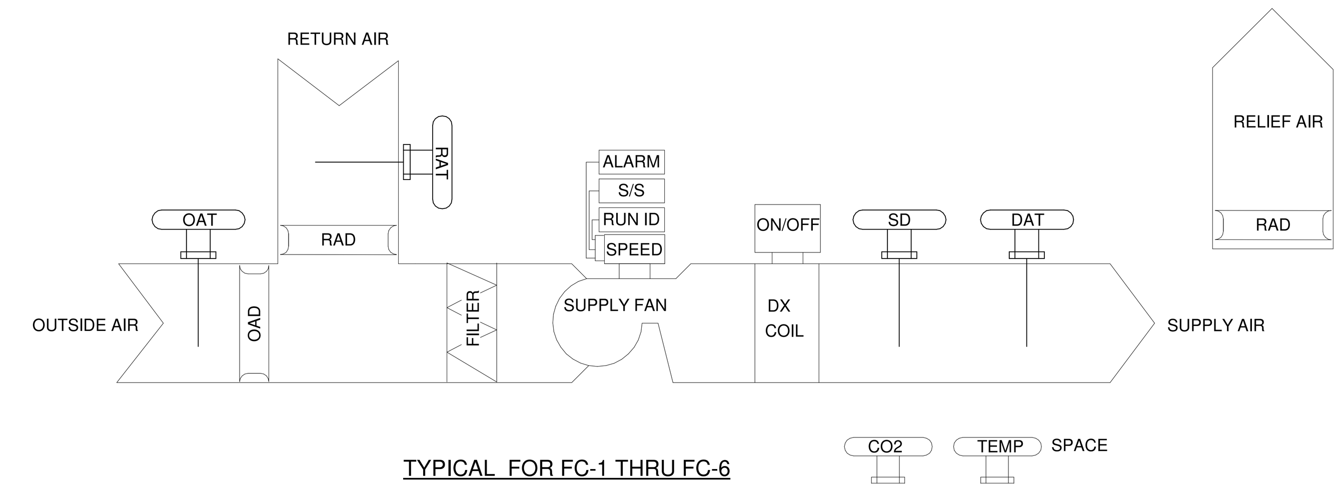

TYPICAL FOR FC-1 THRU FC-6

FAN COIL UNIT SEQUENCE OF OPERATIONS

NOTE: UNITS ARE SPECIFIED WITH FACTORY CONTROLLERS AND BACNET INTERFACE CARDS. BAS SHALL ENABLE / DISABLE UNITS ACCORDING TO OCCUPANCY SCHEDULE, MONITOR OPERATION, GENERATE ALARMS, AND WRITE SPACE TEMPERATURE SETPOINTS. BAS SHALL ALSO OPERATE ECONOMIZER COOLING AS THE FIRST STAGE OF COOLING. OTHER CONTROL FEATURES SHALL BE PERFORMED BY FACTORY CONTROLLER.

OCCUPIED / UNOCCUPIED MODE: OCCUPIED / UNOCCUPIED MODE SHALL BE SCHEDULED BY THE BAS SYSTEM. IN THE OCCUPIED MODE, THE UNIT SHALL BE ENABLED AND SHALL RUN CONTINUOUSLY TO MAINTAIN THE SPACE HEATING SETPOINT OF 70°F(ADJ.) AND THE SPACE COOLING SETPOINT OF 75°F (ADJ.). IN UNOCCUPIED MODE, THE UNIT SHALL RUN AS REQUIRED TO MAINTAIN THE SPACE HEATING SETPOINT OF 65°F (ADJ.) AND THE SPACE COOLING SETPOINT OF 80°F (ADJ.)

FAN CONTROL: THE SUPPLY FAN SHALL RUN CONTINUOUSLY DURING THE OCCUPIED MODE. THE SUPPLY FAN SHALL CYCLE ON AND OFF AS REQUIRED DURING THE UNOCCUPIED MODE TO MAINTAIN THE UNOCCUPIED HEATING SPACE SETPOINT.

ECONOMIZER MODE: WHEN THE OUTSIDE AIR TEMPERATURE IS BELOW THE ECONOMIZER SETPOINT OF 60°F (ADJ.) AND THERE IS A CALL FOR COOLING IN THE SPACE, THE OUTSIDE AND RETURN AIR DAMPERS SHALL MODULATE TO MAINTAIN SPACE COOLING SETPOINT. WHEN THE SUPPLY FAN IS OFF, THE OUTSIDE AIR DAMPER SHALL BE CLOSED AND THE RETURN DAMPER SHALL BE FULLY OPEN. DURING OCCUPIED MODE, WHEN THE SUPPLY FAN IS ON, THE OUTSIDE AND RETURN DAMPERS SHALL INITIALLY BE POSITIONED AT THE MINIMUM SETTING REQUIRED FOR VENTILATION.

MIXED AIR DAMPER CONTROL: WHEN THE SUPPLY FAN IS OFF, THE OUTSIDE AIR DAMPER SHALL BE CLOSED AND THE RETURN DAMPER SHALL BE FULLY OPEN. DURING OCCUPIED MODE, WHEN THE SUPPLY FAN IS ON, THE OUTSIDE AND RETURN DAMPERS SHALL INITIALLY BE POSITIONED AT THE MINIMUM SETTING REQUIRED FOR VENTILATION. THE CONTROLLER SHALL START TO MODULATE THE DAMPERS OPEN BEYOND THE MINIMUM VENTILATION SETTING WHEN THE SPACE CO2 CONCENTRATION IS 100 PPM GREATER THAN THE OUTSIDE AIR CO2 CONCENTRATION. WHEN THE OUTSIDE AIR CO2 CONCENTRATION UPPER LIMIT OF 500 PPM ABOVE THE OA CO2 CONCENTRATION IS REACHED, THE OUTSIDE AIR DAMPER SHALL BE IN THE SETTING REQUIRED FOR FULL OCCUPANCY VENTILATION RATE.

DX COOLING CONTROL: WHEN IN THE OCCUPIED MODE, THE DX COOLING SHALL OPERATE AS REQUIRED TO MAINTAIN THE SPACE TEMPERATURE SETPOINT.

HEAT PUMP HEATING CONTROL: WHEN IN THE OCCUPIED MODE, THE HEAT PUMP HEATING COIL SHALL OPERATE AS REQUIRED TO MAINTAIN THE SPACE TEMPERATURE SETPOINT.

STRIP HEAT CONTROL: STRIP HEAT SHALL ACTIVATE WHEN SYSTEM ACTIVATES DEFROST MODE OR A SECOND STAGE OF HEATING IS REQUIRED TO MAINTAIN SPACE TEMPERATURE SETPOINT.

INTERLOCKS: FC-4 SHALL INTERLOCK WITH EF-2. FC-4 OA DAMPER SHALL ADJUST TO STANDARD OUTSIDE AIR POSITION (NOT DCV POSITION).

SAFETIES / ALARMS: IF THE DISCHARGE AIR TEMPERATURE FALLS BELOW 40°F (ADJ.), OR THE FREEZE STAT ACTIVATES, THE UNIT SHALL BE COMMANDED INTO THE UNOCCUPIED MODE AND AN ALARM SHALL BE GENERATED BY THE FMS SYSTEM. WHEN ANY CONTROL POINT DEVIATES FROM SET-POINT BY MORE THAN 5°F (ADJ.), AN ALARM SHALL BE GENERATED BY THE FMS SYSTEM. WHEN ANY SENSED OUTPUT DIFFERS FROM ITS COMMANDED STATE, AN ALARM SHALL BE GENERATED BY THE FMS SYSTEM.

3 DUCTED FAN COIL CONTROL SCHEMATIC
M400 NOT TO SCALE

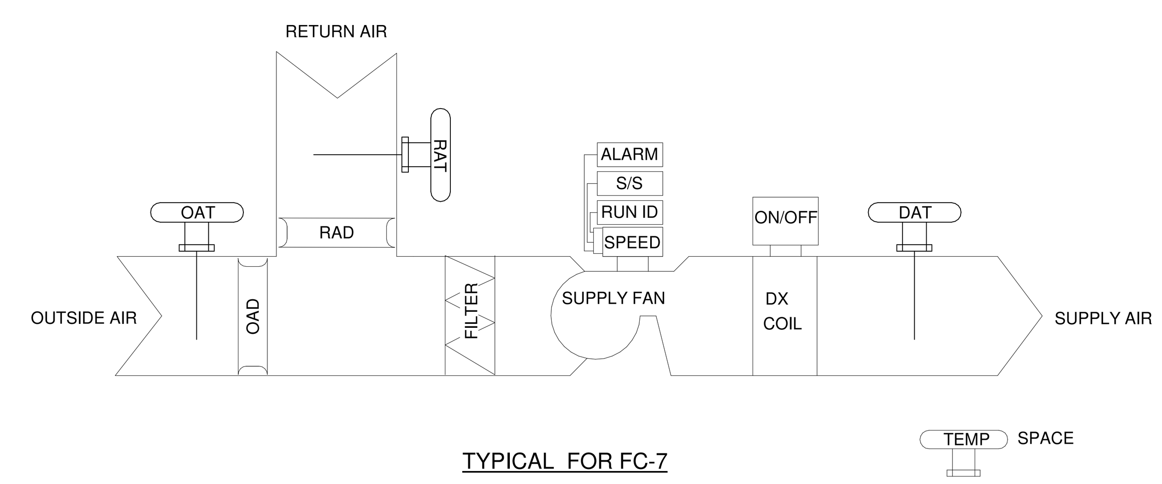

TYPICAL FOR FC-7

FAN COIL UNIT SEQUENCE OF OPERATIONS

NOTE: UNITS ARE SPECIFIED WITH FACTORY CONTROLLERS AND BACNET INTERFACE CARDS. BAS SHALL ENABLE / DISABLE UNITS ACCORDING TO OCCUPANCY SCHEDULE, MONITOR OPERATION, GENERATE ALARMS, AND WRITE SPACE TEMPERATURE SETPOINTS. BAS SHALL ALSO OPERATE ECONOMIZER COOLING AS THE FIRST STAGE OF COOLING. OTHER CONTROL FEATURES SHALL BE PERFORMED BY FACTORY CONTROLLER.

OCCUPIED / UNOCCUPIED MODE: OCCUPIED / UNOCCUPIED MODE SHALL BE SCHEDULED BY THE BAS SYSTEM. IN THE OCCUPIED MODE, THE UNIT SHALL BE ENABLED AND SHALL RUN CONTINUOUSLY TO MAINTAIN THE SPACE HEATING SETPOINT OF 70°F(ADJ.) AND THE SPACE COOLING SETPOINT OF 75°F (ADJ.). IN UNOCCUPIED MODE, THE UNIT SHALL RUN AS REQUIRED TO MAINTAIN THE SPACE HEATING SETPOINT OF 65°F (ADJ.) AND THE SPACE COOLING SETPOINT OF 80°F (ADJ.)

FAN CONTROL: THE SUPPLY FAN SHALL RUN CONTINUOUSLY DURING THE OCCUPIED MODE. THE SUPPLY FAN SHALL CYCLE ON AND OFF AS REQUIRED DURING THE UNOCCUPIED MODE TO MAINTAIN THE UNOCCUPIED HEATING SPACE SETPOINT.

ECONOMIZER MODE: WHEN THE OUTSIDE AIR TEMPERATURE IS BELOW THE ECONOMIZER SETPOINT OF 60°F (ADJ.) AND THERE IS A CALL FOR COOLING IN THE SPACE, THE OUTSIDE AND RETURN AIR DAMPERS SHALL MODULATE TO MAINTAIN SPACE COOLING SETPOINT. WHEN THE SUPPLY FAN IS OFF, THE OUTSIDE AIR DAMPER SHALL BE CLOSED AND THE RETURN DAMPER SHALL BE FULLY OPEN. DURING OCCUPIED MODE, WHEN THE SUPPLY FAN IS ON, THE OUTSIDE AND RETURN DAMPERS SHALL INITIALLY BE POSITIONED AT THE MINIMUM SETTING REQUIRED FOR VENTILATION.

MIXED AIR DAMPER CONTROL: WHEN THE SUPPLY FAN IS OFF, THE OUTSIDE AIR DAMPER SHALL BE CLOSED AND THE RETURN DAMPER SHALL BE FULLY OPEN. DURING OCCUPIED MODE, WHEN THE SUPPLY FAN IS ON, THE OUTSIDE AND RETURN DAMPERS SHALL INITIALLY BE POSITIONED AT THE MINIMUM SETTING REQUIRED FOR VENTILATION. THE CONTROLLER SHALL START TO MODULATE THE DAMPERS OPEN BEYOND THE MINIMUM VENTILATION SETTING WHEN THE SPACE CO2 CONCENTRATION IS 100 PPM GREATER THAN THE OUTSIDE AIR CO2 CONCENTRATION. WHEN THE OUTSIDE AIR CO2 CONCENTRATION UPPER LIMIT OF 500 PPM ABOVE THE OA CO2 CONCENTRATION IS REACHED, THE OUTSIDE AIR DAMPER SHALL BE IN THE SETTING REQUIRED FOR FULL OCCUPANCY VENTILATION RATE.

DX COOLING CONTROL: WHEN IN THE OCCUPIED MODE, THE DX COOLING SHALL OPERATE AS REQUIRED TO MAINTAIN THE SPACE TEMPERATURE SETPOINT.

HEAT PUMP HEATING CONTROL: WHEN IN THE OCCUPIED MODE, THE HEAT PUMP HEATING COIL SHALL OPERATE AS REQUIRED TO MAINTAIN THE SPACE TEMPERATURE SETPOINT.

INTERLOCKS: FC-7 SHALL INTERLOCK WITH EF-1. FC-7 OA DAMPER SHALL ADJUST TO STANDARD OUTSIDE AIR POSITION.

SAFETIES / ALARMS: IF THE DISCHARGE AIR TEMPERATURE FALLS BELOW 40°F (ADJ.), OR THE FREEZE STAT ACTIVATES, THE UNIT SHALL BE COMMANDED INTO THE UNOCCUPIED MODE AND AN ALARM SHALL BE GENERATED BY THE FMS SYSTEM. WHEN ANY CONTROL POINT DEVIATES FROM SET-POINT BY MORE THAN 5°F (ADJ.), AN ALARM SHALL BE GENERATED BY THE FMS SYSTEM. WHEN ANY SENSED OUTPUT DIFFERS FROM ITS COMMANDED STATE, AN ALARM SHALL BE GENERATED BY THE FMS SYSTEM.

5 DUCTED FAN COIL CONTROL SCHEMATIC
M400 NOT TO SCALE

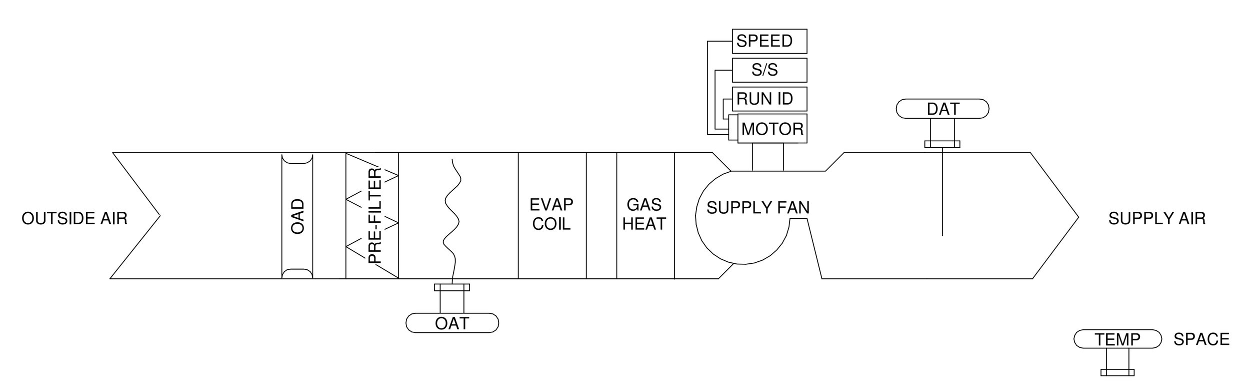

TYPICAL FOR MAU-1

MAKEUP AIR UNIT SEQUENCE OF OPERATIONS:

FAN CONTROL: THE MOTORIZED DAMPER SHALL OPEN/CLOSE AND SUPPLY FAN SHALL RUN BASED ON CAPTIVEAIR CONTROLS. SUPPLY FAN SHALL INTERLOCK WITH EF-1.

TEMPERATURE CONTROL: HEATING AND COOLING SHALL OPERATE AS REQUIRED TO MAINTAIN SPACE TEMPERATURE SETPOINT DICTATED BY CAPTIVE AIRE CONTROLS.

6 MAKEUP AIR UNIT CONTROL SCHEMATICMATIC
M400 NOT TO SCALE

Copyright © 2025

All ideas, designs, arrangements and plans indicated or represented by this drawing are owned by, and the property of, NICHOLS, MELBURG and ROSSETTO and were created, evolved and developed for use on, and in conjunction with, the specified project. None of such ideas, designs, arrangements or plans shall be used by, or disclosed to any person, firm or corporation for any purpose whatsoever without the written permission of NICHOLS, MELBURG and ROSSETTO.

NICHOLS MELBURG & ROSSETTO
ARCHITECTS + ENGINEERS
300 KNOLLCREST DRIVE
REDDING, CA. 96002
(530) 222-3300 (530) 222-3538 FAX
http://www.nmrdesign.com

CONSULTANTS

FRONTIER
CONSULTING ENGINEERS
2727 Bechelli Lane - Redding, CA 96002
Ph: (530) 232-6160 - www.frontierce.com

LICENSE STAMPS

REGISTERED PROFESSIONAL ENGINEER
JASON J. ADAMS
No. M38571
EXP. 9-30-2025
MECHANICAL
STATE OF CALIFORNIA

PROJECT NAME

TEHAMA COUNTY
CORNING
VETERAN'S HALL

1620 SOLANO ST.
CORNING, CA

SHEET TITLE

MECHANICAL CONTROLS

DRAWING STATUS

CONSTRUCTION DOCUMENTS

REVISIONS

Sym.	Description	Date

Drawn By	ML
Date Issued	2/13/2025
Scale	1/8" = 1'-0"
Project No.	21-6497

SHEET No.

M400

C3. TDV ENERGY RESULTS FOR NON-REGULATED COMPONENTS[1]

Non-Regulated Energy Component	Standard Design (TDV)	Proposed Design (TDV)	Compliance Margin (TDV)[2]
Receptacle	125.38	125.38	---
Process	17.1	17.1	---
Other Ltg	---	---	---
Process Motors	---	---	---
TOTAL (TOTAL COMPLIANCE + NON-REGULATED COMPONENTS)	**723.7**	**624.39**	**99.31 (13.7%)**

[1] *Notes: This table is not used for Energy Code Compliance.*

C4. 'ABOVE CODE' QUALIFICATIONS

☐ This project is pursuing CalGreen Tier 1 ☐ This project is pursuing CalGreen Tier 2

C2. TDV ENERGY COMPLIANCE RESULTS FOR PERFORMANCE COMPONENTS (Annual TDV Energy Use, kBtu/ft^2 - yr)

COMPLIES[1]			
Energy Component	Standard Design (TDV)	Proposed Design (TDV)	Compliance Margin (TDV)[2]
Space Heating	77.25	23.29	53.96
Space Cooling	214.38	188.45	25.93
Indoor Fans	193.96	174.55	19.41
Heat Rejection	0	0	0
Pumps & Misc.	0	0	0
Domestic Hot Water	26.49	26.48	0.01
Indoor Lighting	69.14	69.14	0
Flexibility	---	---	---
EFFICIENCY COMPLIANCE TOTAL	**581.22**	**481.91**	**99.31 (17.1%)**
Photovoltaics	---	---	---
Batteries	---	---	---
TOTAL COMPLIANCE	**581.22**	**481.91**	**99.31 (17.1%)**

[1] *Notes: This number in parenthesis following the Compliance Margin in column 4, represents the Percent Better than Standard.*

C1. COMPLIANCE SUMMARY

COMPLIES[1]			
	Time Dependent Valuation (TDV)		Source Energy Use
	Efficiency[2] (kBtu/ft^2 - yr)	Total[2] (kBtu/ft^2 - yr)	Total[2] (kBtu/ft^2 - yr)
Standard Design	581.22	n/a	n/a
Proposed Design	481.91	n/a	n/a
Compliance Margins	**99.31**	**n/a**	**n/a**
	Pass	**n/a**	**n/a**

[1] *Efficiency measures include improvements like a better building envelope and more efficient equipment*
[2] *Compliance Totals include efficiency, photovoltaics and batteries*
[3] *New Construction, Complete Addition Scope: Building complies when all efficiency and total compliance margins are greater than or equal to zero and annual load hour limits are not exceeded*
Existing, Addition and Alteration Scope: Building complies when efficiency compliance margin is greater than or equal to zero and unmet load hour limits are not exceeded

B. PROJECT SUMMARY

Table B shows which building components are included in the performance calculation. If indicated as not included, the project must show compliance prescriptively if within the permit application.

Building Components Complying via Performance			Building Components Complying Prescriptively		
Envelope (See Table G)	Nonres	Performance	Solar Thermal Water Heating (See Table I3)	☐ Performance	The following building components are ONLY eligible for prescriptive compliance and should be documented on the NRCC form listed if within the scope of the permit application (i.e. compliance will not be shown on the NRCC PRF-E).
	MultiFam	Not Included		☒ Not Included	
Mechanical (See Table H)	Nonres	Performance	Covered Process: Commercial Kitchens (see Table J)	☒ Performance	Indoor Lighting (Unconditioned) 140.6 & 170.2(e) — NRCC-LTI-E is required
	MultiFam	Not Included		☐ Not Included	Outdoor Lighting 140.7 & 170.2(e) — NRCC-LTO-E is required
Domestic Hot Water (See Table I)	Nonres	Not Included	Covered Process: Laboratory Exhaust (see Table J)	☐ Performance	Sign Lighting 140.8 & 170.2(e) — NRCC-LTS-E is required
	MultiFam	Not Included		☒ Not Included	**Building Components Complying with Mandatory Measures**
Lighting (Indoor Conditioned, see Table K)	Nonres	Not Included	Photovoltaics (see Table F)	☐ Performance	Electrical power systems, commissioning, solar ready, elevator and escalator requirements are mandatory and should be documented on the NRCC form listed if applicable (i.e. compliance will not be shown on the NRCC PRF-E.)
	MultiFam	Not Included		☒ Not Included	Electrical Power Distribution 110.11 — NRCC-ELC-E is required
			Battery (see Table F)	☐ Performance	Commissioning 120.8 — NRCC-CXR-E is required
				☒ Not Included	Solar and Battery 110.10 — NRCC-SAB-E is required

Project Name:	Tehama County Corning Veterans Hall	Date Prepared:	2024-10-08

A. General Information

1	Project Name	Tehama County Corning Veterans Hall	
2	Run Title	Title 24 Analysis	
3	Project Location	1520 Solano St	
4	City	Corning	
5	Standards Version	Compliance 2022	
6	Zip code	96021	
7	Compliance Software (version)	EnergyPro 9.2	
8	Climate Zone	11	
9	Building Orientation (deg)	0	
10	Building Type(s)	• Nonresidential	
11	Weather File	RED-BLUFF_STYP20.epw	
12	Project Scope	• Existing alteration	
13	Number of Dwelling Units	0	
14	Total Conditioned Floor Area in Scope (ft^2)	10065	
15	Total # of hotel/motel rooms	0	
16	Total Unconditioned Floor Area (ft^2)	0	
17	Fuel Type	Natural gas	
18	Nonresidential Conditioned Floor Area	10065	
19	Total # of Stories (Habitable Above Grade)	1	
20	Residential Conditioned Floor Area	0	

G6A. OPAQUE DOOR SUMMARY (NONRESIDENTIAL)

01	02	03	04
Assembly Name	Area (ft^2)	Overall U-factor	Status[1]
Insulated Door24	210	0.2	A

[1] *Status: N - New, A - Altered, E - Existing*

G7A. FENESTRATION ASSEMBLY SUMMARY (NONRESIDENTIAL)

01	02		03	04	05	06	07	08	09
Fenestration Assembly Name	Fenestration Type/ Product Type / Frame Type		Assembly Method	Certification Method[2]	Area (ft^2)	Overall U-factor	Overall SHGC	Overall VT	Status[1]
Corning Vets Window	Vertical fenestration	Fixed window	NFRC	Manufactured	812	0.3	0.3	0.5	N
	N/A								

[1] *Notes: Newly installed fenestration shall have a certified NFRC Label Certificate or use the CEC default tables found in Table 110.6-A and Table 110.6-B. Center of Glass (COG) values are for the glass only, determined by the manufacturer, and are shown for ease of verification. Site-built fenestration values are calculated per Nonresidential Appendix NA6 and are used in the analysis.*
[2] *Status: N - New, A - Altered, E - Existing*

H1. DRY SYSTEM EQUIPMENT (FURNACES, AIR HANDLING UNITS, HEAT PUMPS, VAV, ECONOMIZERS ETC.)

01	02	03	04	05	06	07	08	09	10	11	12
			Heating				Cooling				
Equipment Name	Equipment Type	Qty	Total Heating Output (kBtu/h)	Supp Heat Output (kBtu/h)	Efficiency Unit	Efficiency	Total Cooling Output (kBtu/h)	Efficiency Unit	Efficiency	Economizer Type (if present)	Status[1]
RTU_1_Social Room	Single Zone Heat Pump (SZHP) Air System	1	27.6	22.18	COP HSPF2	3.4 7.3	33.6	EER2 SEER2	11.7 16	Fixed DB	N

[1] *Status: N - New, A - Altered, E - Existing*

G5. OPAQUE SURFACE ASSEMBLY SUMMARY

01	02	03	04	05		06		07	08	09	10
					Continuous R-Value						
Surface Name	Construction Type	Area (ft^2)	Framing Type	Cavity R-Value	Interior	Exterior	Units	Value		Description of Assembly Layers	Status[1]
Altered R-19 Wood Roof Rafi	Roof	1,911	Wood	19	N/A	N/A	U-factor	0.05		Single Ply Roofing - 1/4 in. Vapor permeable felt - 1/8 in. Plywood - 1/2 in. Air - Ceiling - 3/4 in. Composite-1 Gypsum Board - 1/2 in.	A
Altered R-19 Wall10	Exterior Wall	9,773	Wood	13	N/A	N/A	U-factor	0.0852		Brick - Fired clay - 140 lb/ft3 - 3 5/8 in. Vapor permeable felt - 1/8 in. Composite-2 Gypsum Board - 1/2 in.	A
Altered R-19 Floor Crawls14	Exterior Floor	10,444	Wood	19	N/A	N/A	U-factor	0.0537		Air - Floor - 3 1/2 in. Composite-3 Plywood - 1/2 in.	A
Altered R-30 Wood Roof Raz1	Roof	7,810	Wood	30	N/A	N/A	U-factor	0.0344		Single Ply Roofing - 1/4 in. Vapor permeable felt - 1/8 in. Plywood - 1/2 in. Air - Ceiling - 9 1/4 in. Composite-4 Gypsum Board - 1/2 in.	A
R-0 Floor Crawlspace65	Exterior Floor	1,167	N/A	0	N/A	N/A	U-factor	0.2747		Air - Floor - 3 1/2 in. Air - Cavity - Wall Roof Ceiling - 4 in. or less Plywood - 1/2 in.	E
R-19 Floor No Crawlspace67	Exterior Floor	36	Wood	19	N/A	N/A	U-factor	0.0496		Composite-5 Plywood - 1/2 in. Carpet - 3/4 in.	A

[1] *Status: N - New, A - Altered, E - Existing*

G1. ENVELOPE GENERAL INFORMATION (conditioned spaces only)

01	02	03	04
Opaque Surfaces & Orientation	Total Gross Surface Area (ft^2)	Total Fenestration Area (ft^2)	Window to Wall Ratio (%)
Roof	9721	0	0

Notes
[1] *North-Facing is oriented to within 45 degrees of true north, including 45 00'00" east of north (NE), but excluding 45 00'00" west of north (NW).*
[2] *East-Facing is oriented to within 45 degrees of true east, including 45 00'00" south of east (SE), but excluding 45 00'00" north of east (NE).*
[3] *South-Facing is oriented to within 45 degrees of true south, including 45 00'00" west of south (SW), but excluding 45 00'00" east of south (SE).*
[4] *West-Facing is oriented to within 45 degrees of true west, including 45 00'00" north of west (NW), but excluding 45 00'00" south of west (SW).*

G4. NONRESIDENTIAL AIR BARRIER

01	02
Building Story Name	Air Barrier
Com-Floor 1	No air barrier

C8. ENERGY USE INTENSITY (EUI)

	Standard Design (kBtu/ft^2 / yr)	Proposed Design (kBtu/ft^2 / yr)	Margin (kBtu/ft^2 / yr)	Margin Percentage
GROSS EUI[1]	104.16	76.53	27.63	26.53
NET EUI[2]	104.16	76.53	27.63	26.53

[1] *Notes: Gross EUI is Energy Use Total (not including PV)/Total Building Area. Net EUI is Energy Use Total (including PV)/Total Building Area.*

D1. EXCEPTIONAL CONDITIONS

- The project uses the Simplified Geometry Performance Modeling Approach which is not capable of modeling daylighting controls and assumes the prescriptive Secondary Daylit Control requirements are met. PRESCRIPTIVE COMPLIANCE documentation (form NRCC-LTI-02-E) for the requirements of section 140.6(d) Automatic Daylighting Controls in Secondary Daylit Zones is required.
- The user model includes space(s) that are designed to be served by mechanical cooling systems, but the cooling systems were not included in the simulation model. A cooling system has been modeled for both the proposed and standard cases.
- The user model includes space(s) without sufficient cooling equipment. Cooling equipment has been added to the model to meet cooling loads.

G1. ENVELOPE GENERAL INFORMATION (conditioned spaces only)

01	02	03	04
Opaque Surfaces & Orientation	Total Gross Surface Area (ft^2)	Total Fenestration Area (ft^2)	Window to Wall Ratio (%)
North-Facing[1]	2878	463	16.09
East-Facing[2]	1799	54	3
South-Facing[3]	2959	231	7.81
West-Facing[4]	2137	64	2.99
Total	**9773**	**812**	**8.31**

Notes
[1] *North-Facing is oriented to within 45 degrees of true north, including 45 00'00" east of north (NE), but excluding 45 00'00" west of north (NW).*
[2] *East-Facing is oriented to within 45 degrees of true east, including 45 00'00" south of east (SE), but excluding 45 00'00" north of east (NE).*
[3] *South-Facing is oriented to within 45 degrees of true south, including 45 00'00" west of south (SW), but excluding 45 00'00" east of south (SE).*
[4] *West-Facing is oriented to within 45 degrees of true west, including 45 00'00" north of west (NW), but excluding 45 00'00" south of west (SW).*

C7. ENERGY USE SUMMARY

Energy Component	Standard Design Site (MWh)	Proposed Design Site (MWh)	Margin (MWh)	Standard Design Site (MBtu)	Proposed Design Site (MBtu)	Margin (MBtu)
Space Heating	---	8.2	---	276.4	---	---
Space Cooling	53.5	47.6	5.9	---	---	---
Indoor Fans	65.7	62.9	2.8	---	---	---
Heat Rejection	---	---	---	---	---	---
Pumps & Misc.	---	---	---	---	---	---
Domestic Hot Water	9.8	9.8	0	---	---	---
Indoor Lighting	24.7	24.7	0	---	---	---
Flexibility	---	---	---	---	---	---
EFFICIENCY TOTAL	**153.7**	**153.2**	**0.5**	**276.4**	**0**	**276.4**
Photovoltaics	---	---	---	---	---	---
Batteries	---	---	---	---	---	---
ENERGY USE SUBTOTAL	**153.7**	**153.2**	**0.5**	**276.4**	**0**	**276.4**
Receptacle	35.2	35.2	0	106.6	106.6	0
Process	6.1	6.1	0	---	---	---
Other Ltg	---	---	---	---	---	---
Process Motors	---	---	---	---	---	---
ENERGY USE TOTAL	**195**	**194.5**	**0.5**	**383**	**106.6**	**276.4**

L. DECLARATION OF REQUIRED CERTIFICATES OF INSTALLATION

Selections made by Documentation Author indicate which Certificates of Installation must be submitted for the features to be recognized for compliance. These documents must be retained and provided to the building inspector during construction and can be found online

Building Component	Form/Title
Envelope	NRCI-ENV-01-E - Must be submitted for all buildings
Envelope	NRCI-ENV-E - Envelope (for all buildings)
Mechanical	NRCI-MCH-01-E - Must be submitted for all buildings
Mechanical	NRCI-MCH-E - For all buildings with Mechanical Systems
Plumbing	NRCI-PLB-01-E - Must be submitted for all buildings
Plumbing	NRCI-PLB-E - For all buildings with Plumbing Systems
Covered Process	NRCI-PRC-01-E - Must be submitted for all Covered Processes

M. DECLARATION OF REQUIRED CERTIFICATES OF ACCEPTANCE

Selections made by Documentation Author indicate which Certificates of Acceptance must be submitted for the features to be recognized for compliance. These documents must be provided to the building inspector during construction and must be completed through an Acceptance Test Technician Certification Provider (ATTCP).

Building Component	Form/Title
Envelope	NRCA-ENV-02-F - NFRC label verification for fenestration
Covered Process	NRCA-PRC-02-F Kitchen Exhaust
Mechanical	NRCA-MCH-02-A - Outdoor Air must be submitted for all newly installed HVAC units. Note: MCH-02-A can be performed in conjunction with MCH-07-A Supply Fan VFD Acceptance (if applicable) since testing activities overlap
Mechanical	NRCA-MCH-03-A – Constant Volume Single Zone HVAC
Mechanical	NRCA-MCH-05-A - Air Economizer Controls
Mechanical	NRCA-MCH-06-A Demand Control Ventilation Systems must be submitted for all systems required to employ demand controlled ventilation (refer to) can vary outside ventilation flow rates based on maintaining interior carbon dioxide (CO2) concentration setpoints.
Mechanical	NRCA-MCH-12-A FDD for Packaged Direct Expansion Units

N. DECLARATION OF REQUIRED CERTIFICATES OF VERIFICATION

Selections made by Documentation Author indicate which Certificates of Verification must be submitted for the features to be recognized for compliance. These documents must be retained and provided to the building inspector during construction and can be found online

There are no Certificates of Verification applicable to this project

H8. NONRESIDENTIAL / COMMON USE AREA & HOTEL/MOTEL VENTILATION

01	02	03	04	05	06	07
			Mechanical Ventilation			
Zone Name	Ventilation Function	# of People	Supply OA CFM	Exhaust CFM	Conditioned Area (sf)	DCV or Occupant Sensor Controls, or Both
6-FC-7	Food Service - Kitchen (cooking)	1.74	104.1	3568	694	N/A

H11. ZONAL SYSTEM AND TERMINAL UNIT SUMMARY

01	02	03	04	05	06	07	08	09	10	11	12
			Rated Capacity (kBtuh)		Airflow (cfm)				Fan		
System ID	System Type	Qty	Heating	Cooling	Design	Min.	Min. Ratio	Power	Power Units	Cycles	VSD
1-RTU-1-Trm	Uncontrolled	1	N/A	N/A	1,200	N/A	0	N/A	N/A	N/A	☐
2-RTU-2-Trm	Uncontrolled	1	N/A	N/A	1,900	N/A	0	N/A	N/A	N/A	☐
3-FC-1 - FC-4-Trm	Uncontrolled	4	N/A	N/A	7,200	N/A	0	N/A	N/A	N/A	☐
4-FC-5 - 6-Trm	Uncontrolled	2	N/A	N/A	3,600	N/A	0	N/A	N/A	N/A	☐
5-RTU-3-Trm	Uncontrolled	1	N/A	N/A	1,900	N/A	0	N/A	N/A	N/A	☐
6-FC-7-Trm	Uncontrolled	1	N/A	N/A	1,800	N/A	0	N/A	N/A	N/A	☐
PropNoClg NonResZnSys	Single Zone Air Conditioner	4	0	68.66	2,064.19	N/A	N/A	0	W/cfm	Cycling	☐
PropNoClg NonResZnSys-2	Single Zone Air Conditioner	1	0	61.18	1,810.28	N/A	N/A	0	W/cfm	Cycling	☐

J2. COMMERCIAL KITCHENS

01	02	03	04	05
Space Name	Exhaust Hood Style	Exhaust Hood Duty	Exhaust Length	Exhaust Flow Rate (cfm)
5-7-FC-7	Wall-mounted Canopy	Heavy Duty	14	3,568

H9. SYSTEM SPECIAL FEATURES

01	02	03	04
System Name	Equipment Type	Interlocks per 140.4(o)[1]	Other Special Features and Controls
RTU_1_Social Room	Single Zone Heat Pump (SZHP) Air System	N/A	Zone(s) With CO2 Sensor Vent. Control Fixed DB
RTU_2_Banquet Room	Single Zone Heat Pump (SZHP) Air System	N/A	Zone(s) With CO2 Sensor Vent. Control Fixed DB
FC_1_4_AuditoriumStage A	Single Zone Heat Pump (SZHP) Air System	N/A	Zone(s) With CO2 Sensor Vent. Control Fixed DB
FC_5_6_Stage	Single Zone Heat Pump (SZHP) Air System	N/A	Zone(s) With CO2 Sensor Vent. Control Fixed DB
RTU_3_Lobby Areas	Single Zone Heat Pump (SZHP) Air System	N/A	Zone(s) With CO2 Sensor Vent. Control Fixed DB
Corning Veterans Hall1 - SYW	Service Hot Water	N/A	Fixed Temperature Control
Kitchen HW122 - SYW	Service Hot Water	N/A	Fixed Temperature Control

Notes: This table includes controls related to the performance path only. For projects using the prescriptive path, mandatory and prescriptive controls requirements are documented on the NRCC-MCH-E.
[1] *No = interlocks are provided, No + interlocks are not provided, NA means no operable openings.*

H9. NONRESIDENTIAL / COMMON USE AREA & HOTEL/MOTEL VENTILATION

01	02	03	04	05	06	07
		Mechanical Ventilation				
Zone Name	Ventilation Function	# of People	Supply OA CFM	Exhaust CFM	Conditioned Area (sf)	DCV or Occupant Sensor Controls, or Both
1-RTU-1	Misc - All others	21.27	95.7	0	638	OCV
2-RTU-2	Misc - All others	32.6	146.7	0	978	OCV
3-FC-1 - FC-4	Assembly - Auditorium seating area NA	328.72	4924.14	0	4602	OCV
4-FC-5 - 6	Sports/Entertainment - Stages, studios	97.22	680.5	0	1361	OCV
5-RTU-3	Assembly - Lobbies	10.74	896	545	1792	OCV

H3. NONRESIDENTIAL / COMMON USE AREA FAN SYSTEMS SUMMARY

01	02	03	04	05	06	07	08	09	10	11	12	13
			Supply Fan					Return / Relief Fan				
Name or Item Tag	Qty	Design OA CFM	CFM	Power	Power Units	Control	Fan Type	CFM	Power	Power Units	Control	Status[1]
RTU_1_Social Room	1	95.7	1,200	0.66	BHP	Constant Vol	N/A	N/A	N/A	N/A	N/A	N
RTU_2_Banquet Room	1	146.7	1,900	1.24	BHP	Constant Vol	N/A	N/A	N/A	N/A	N/A	N
FC_1_4_AuditoriumStage A	4	1231.04	1,800	1	BHP	Constant Vol	N/A	N/A	N/A	N/A	N/A	N
FC_5_6_Stage	2	340.25	1,800	1	BHP	Constant Vol	N/A	N/A	N/A	N/A	N/A	N
RTU_3_Lobby Areas	1	896	1,900	1.24	BHP	Constant Vol	N/A	N/A	N/A	N/A	N/A	N
FC_7_Kitchen	1	104.1	1,800	1	BHP	Constant Vol	N/A	N/A	N/A	N/A	N/A	N

[1] *Status: N - New, A - Altered, E - Existing*

H5. GENERAL EXHAUST FAN SUMMARY

01	02	03	04	05	06	07	08
System ID	Zone Name	Qty	CFM	Power	Power Units	Continuous Operation[1]	Status[2]
RTU-396		1	545	0.3	BHP	No	E
FC-7124	6-FC-7	1	3568	1.03	BHP	No	E

[1] *Status: N - New, A - Altered, E - Existing*

H1. DRY SYSTEM EQUIPMENT (FURNACES, AIR HANDLING UNITS, HEAT PUMPS, VAV, ECONOMIZERS ETC.)

01	02	03	04	05	06	07	08	09	10	11	12
			Heating				Cooling				
Equipment Name	Equipment Type	Qty	Total Heating Output (kBtu/h)	Supp Heat Output (kBtu/h)	Efficiency Unit	Efficiency	Total Cooling Output (kBtu/h)	Efficiency Unit	Efficiency	Economizer Type (if present)	Status[1]
RTU_2_Banquet Room	Single Zone Heat Pump (SZHP) Air System	1	53.12	26.95	COP HSPF2	3.45 7.5	57.13	EER2 SEER2	12 16	Fixed DB	N
FC_1_4_Auditoriums/Stage A	Single Zone Heat Pump (SZHP) Air System	4	58.85	34.12	COP HSPF	3.9 10.5	55.21	EER SEER	9.2 15.5	Fixed DB	N
FC_5_6_Stage	Single Zone Heat Pump (SZHP) Air System	2	58.85	34.12	COP HSPF	3.9 10.5	55.21	EER SEER	9.2 15.5	Fixed DB	N
RTU_3_Lobby Areas	Single Zone Heat Pump (SZHP) Air System	1	53.12	26.95	COP HSPF2	3.45 7.5	57.13	EER2 SEER2	12 16	Fixed DB	N
FC_7_Kitchen	Single Zone Heat Pump (SZHP) Air System	1	58.85	0	COP HSPF	3.9 10.5	55.21	EER SEER	9.2 15.5	No Economizer	N

[1] *Status: N - New, A - Altered, E - Existing*

STATE OF CALIFORNIA
Process Systems CALIFORNIA ENERGY COMMISSION

CERTIFICATE OF COMPLIANCE			NRCC-PRC-E
Project Name:	Tehama County Corning Veteran's Hall	Report Page:	(Page 4 of 6)
		Date Prepared:	10/8/2024

N. COMMERCIAL KITCHEN EXHAUST AND VENTILATION

05	The kitchens' dining facility has a total Type I and Type II kitchen hood exhaust airflow > 5000 cfm and is designed to have one of the following per 140.9(b)2B: NA. Not a kitchens' dining facility having a total Type I and Type II kitchen hood exhaust airflow rate < 5,000 cfm

Kitchen Exhaust: Airflow Rate 140.9(b)1B

01	Kitchen Name or Item Tag	Kitchen	Compliance Method per 140.9(b)1B	NA: Kitchen/ dining facility has a total Type I and Type II kitchen hood exhaust airflow rate <= 5,000 cfm
02	03	04	05	06	07	08
Name or Item Tag	Hood Type[1]	Hood Style	Hood Length (ft)	Equipment Duty	Design Hood Exhaust Rate CFM	Max Hood Exhaust Rate Allowed CFM
EH-1	Type I	Wall-mounted Canopy	14	Heavy Duty	3023	3920
EH-2	Type II	Wall-mounted Canopy	3.5	Light Duty	525	490

FOOTNOTES: Type II hoods do not have a max hood exhaust air rate per 140.9(b)1B

O. LABORATORY AND FACTORY EXHAUST AND FUME HOODS
This section does not apply to this project.

P. CONTROLLED ENVIRONMENT HORTICULTURE
This section does not apply to this project.

**Q. STEAM TRAPS IN INDUSTRIAL

PLUMBING LEGEND

SYMBOLS	ABBREVIATIONS	
	ABC	ABOVE CEILING
	BFP	BACKFLOW PREVENTER
		BALL VALVE
	BG	BELOW GRADE
	BS	BELOW SLAB
		CHECK VALVE
	CW	COLD WATER SUPPLY
	CD	CONDENSATE DRAIN
	CDO	CONDENSATE DRAIN OVERFLOW
		CONNECTION TO BOTTOM OF PIPE
		CONNECTION TO TOP OF PIPE
	D	DEMO
		DOMESTIC COLD WATER
		DOMESTIC HOT WATER
	DN	DOWN
	DIW	DOWN IN WALL
	E, EX	EXISTING
		FLANGE
	FCO	FLOOR CLEAN OUT
	FD	FLOOR DRAIN
	FS	FLOOR SINK
	GSM	GALVANIZED SHEET METAL
	GCO	GRADE CLEAN OUT
	GW	GREASE WASTE
	HB	HOSE BIB
	HW	HOT WATER SUPPLY
	HWR	HOT WATER RECIRC
	N	NEW
		NEW CONNECTION TO EXISTING
	OH	OVERHEAD
	PD	PRIMARY STORM DRAIN
		PIPE CAP
		PIPE TURNED DOWN
		PIPE TURNED UP
		PRESSURE GAUGE
		PRESSURE REGULATOR
		P-TRAP
		RELIEF VALVE
		REMOVE TO THIS POINT
	SS	SANITARY SEWAGE (BELOW GRADE)
	SD	SECONDARY STORM DRAIN
	SOV	SHUT-OFF VALVE
	SK	SINK
		STRAINER
		THERMOMETER
	TMV	THERMOSTATIC VALVE
	TP	TRAP PRIMER
		TRIPLE DUTY VALVE
	UG	UNDERGROUND
		UNION
	UIW	UP IN WALL
	UR	URINAL
	V	VENT
	VTR	VENT TO ROOF
	WC	WATER CLOSET
	WHA	WATER HAMMER ARRESTER
	WCO	WALL CLEANOUT

PIPING MATERIALS SCHEDULE

Service	Location	Size	Material	Notes
WASTE & VENT	INTERIOR, AFF	ALL	STANDARD WEIGHT HUBLESS CAST IRON	SLOPED AT 1/4" PER FOOT
	INTERIOR, BELOW SLAB		STANDARD WEIGHT HUBLESS CAST IRON	
GREASE WASTE	ALL	ALL	SCH. 40 PVC - DWV	SLOPED AT 1/4" PER FOOT
CW / HW	INTERIOR, ABOVE GROUND	ALL	TYPE "L" COPPER	PEX PIPING NOT ACCEPTABLE; INSULATE PER SECTION 22 00 00
	INTERIOR, BELOW SLAB	ALL	TYPE "K" COPPER	
GAS	EXTERIOR, ABOVE GRADE	ALL	BLACK STEEL THREADED	2" AND SMALLER - THREADED CONNECTIONS, LARGER THAN 2" - WELDED CONNECTIONS
COND. DRAIN	ALL	ALL	TYPE M - HARD TEMPER COPPER	SLOPED AT 1/8" PER FOOT

WATER AND WASTE FIXTURE UNIT CALCULATIONS

Project: Corning Veterans Hall **Occupancy:** Public

Sized Per Appendix A and Table A103.1

Fixture	No:	Cold Water		Hot Water		Waste	
		FU/FIX	FU TOTAL	FU/FIX	FU TOTAL	DFU/FIX	DFU TOTAL
TOILET	4	5.0	20	--	--	4.0	16
URINAL	2	2.0	4	--	--	1.0	2
LAVATORY	4	1.0	4	0.75	3	1.0	4
MOP SINK	2	3.0	6	2.25	4.5	3.0	6
HAND SINK	2	1.0	2	0.75	1.5	1.0	2
2-COMP SINK	1	2.0	2	1.5	1.5	3.0	3
HOSE BIBB	1	2.5	2.5	--	--	--	--
HOSE BIBB ADDTL	4	1.0	4	--	--		
3-COMP SINK FAUCETS	2	2.0	4	1.5	3	4.0	8
DRINKING FOUNTAIN	1	0.5	0.5	--	--	0.5	0.5
FLOOR DRAIN	2	--	--	--	--	2.0	4
DISHWASHER	1	1.5	1.5	1.125	1.125	2.0	2

Total Fixture Units						
CW FU	50.5	HW FU	7.1	DFU	19.5
Line Size	2"	Line Size	1-1/2"	San. Size	4"
GPM	51.5	GPM	6.5	Max DFU	216.0
FPS	5.4	FPS	2.4		
PSI / 100	2.9	PSI / 100	1.8		

Pressure Available at Water Main	60	psi
Backflow Preventer Loss	15	psi
Water Meter Loss	5	psi
Elevation Loss	3.0	psi
Minimum Pressure Required at Fixture	25	psi
Total Pipe Friction Loss Available	12.0	psi
Approximate Total Equivalent Length	250	ft.
Maximum Allowable Pipe Friction Loss per 100 Feet	**4.8**	psi

GREASE INTERCEPTOR SIZING TABLE

Plan Tag	Description	No:	Waste	
			DFU/FIX	DFU TOTAL
SK	SINK	2	3.0	6.0
FD	FLOOR DRAIN	3	2.0	6.0
FS	FLOOR SINK, 0 TO 7-1/2 GPM	4	1.0	4.0
FS	FLOOR SINK, 7-1/2 TO 15 GPM	1	2.0	2.0
FS	FLOOR SINK, 15 TO 30 GPM	1	4.0	4.0
MS	MOP SINK	1	2.0	2.0
Total Fixture Units			DFU	24.0
			GW SIZE	4"
			MAX DFU	32.0
Min Required Interceptor Volume			1000 GAL	
Design Interceptor Volume			1000 GAL	

Drainage Fixture Units Based on Tables 702.1, Table 702.2(b) and Grease Interceptor Volume Based on Table 1014.3.6 of CPC

GAS PIPE SIZING TABLE

PER TABLE 1215.1(1) OF 2022 CPC

Location	Equipment	Demand (MBh)
CORNING VETERANS HALL	MAU-1	132
	RANGE	310
	FRYERS	244
	OVEN	80
	TOTAL	766
	DISTRIBUTION PRESSURE	7" W.C.
	DEVELOPED LENGTH	175 FT
	GAS LINE SIZE	2"
	MAX DEMAND	854 MBh

PLUMBING FIXTURE SCHEDULE

ID	Make	Model No.	Description	Mounting	Material
WC-1	KOHLER	K-96057	ACCESSIBLE HEIGHT FLUSH VALVE WATER CLOSET, HIGHCLIFF MODEL, ADA COMPLIANT, SLOAN ROYAL 111-1.28 MANUAL 1.28 GPF FLUSH VALVE, ELONGATED BOWL, 1-1/2" TOP SPUD, OLSONITE #95 COMFORT CURVE OPEN FRONT SEAT. DIMENSIONS: 26-1/8" LONG x 14-5/8" WIDE x 16-5/8" HIGH	FLOOR	VIT.CHINA
UR-1	KOHLER	K-4991-ET	ACCESSIBLE HEIGHT HIGH EFFICIENCY 0.125 GPF MAXIMUM FLUSH VALVE URINAL WITH WASHOUT ACTION, 14" EXTENDED RIM, SLOAN ROYAL 186-0. 125 MANUAL FLUSH VALVE, 3/4" TOP SPUD, J.R. SMITH CARRIER. 0.125 GALLON PER FLUSH MAXIMUM. (REFER TO ARCH. FOR MOUNTING HEIGHT) DIMENSIONS: 24" MAX TO RIM	WALL	VIT.CHINA
L-1	SLOAN	SS-3001	UNDER MOUNT LAVATORY WITH OVERFLOW, HOT/COLD WATER HOLES 4" O.C., CHICAGO FAUCET 420-E2805-ABCP SINGLE LEVER HOT & COLD WATER MIXING FAUCET, 0.5 GPM, J.R. SMITH CONCEALED ARM SUPPORT, INCULATED WATER AND TRAP LINES DIMENSIONS: 20" x 18"	COUNTER	VIT.CHINA
SK-1	--	--	SINK BY OTHERS	--	--
SK-2	--	--	SINK BY OTHERS	--	--
SK-3	--	--	SINK BY OTHERS	--	--
MS-1	FLORESTONE	MSR-2424	24" x 24" x 12" MOLDED MAP RECEPTOR, ONE-PIECE DESIGN, INTEGRAL DRAIN, 3" DRAIN SIZE, CHICAGO #897-CP SERVICE SINK FAUCET WITH VACUUM BREAKER, WALL BRACE, HOSE THREAD ON SPOUT, PAIL HOOK.	FLOOR	MOLDED PLASTIC
MS-2	ZURN	EFSC3321C	33" x 21" x 8" SINGLE BOWL, FULL SPRAY SIDES, BOTTOM ONLY PADS, CENTER DRAIN PLACEMENT, 4-9/16" DRAIN SIZE, CHICAGO #897-CP SERVICE SINK FAUCET WITH VACUUM BREAKER, WALL BRACE, HOSE THREAD ON SPOUT, PAIL HOOK.	FLOOR	STAINLESS STEEL
FS-1	J.R. SMITH	3420Y-12	CAST IRON FLOOR SINK WITH 12" SQUARE TOP, 6" DEEP, ACID RESISTANT COATED INTERIOR, LOOSE SET ACID RESISTANCE COATED CAST IRON 1/2 GRATE, AND ALUMINUM DOME BOTTOM STRAINER.	FLOOR	CAST IRON
FD-1	J.R. SMITH	2005Y	2" NPT CONNECTION, 5" NICKLE BRONZE ADJUSTABLE STRAINER HEAD, TRAP PRIMER CONNECTION, FLUSH WITH FLOOR SURFACE, ADJACENT FLOORING SHALL BE SLOPED TO FLOOR DRAIN.	FLOOR	CAST IRON
DF-1	ELKAY	LZSTL8WSSK	HI/LO ELECTRIC WATER COOLER WITH BOTTLING STATION, REFRIGERATED, 115V ELECTRICAL SERVICE, 5 F.L. AMPS, 370 WATTS. PROVIDE FLEXI-GAURD SAFETY BUBBLER AND SUPPORT CARRIER. (REFER TO ARCHITECTURAL FOR MOUNTING HEIGHT).	WALL	STAINLESS STEEL
(R) WH-1	RHEEM	XE50T06ST45U1	ELECTRIC WATER HEATER, 50 GALLON STORAGE CAPACITY, 20.25" DIAMETER, 59" TALL, 21 GPH RECOVERY AT 90°F TEMP RISE, ELECTRIC 240V, 1 PHASE, 3 KW ELEMENT, 140°F TEMP SETTING, 121 LB EMPTY, 550 LBS FULL.	ON STAND	--
WH-2	A.O. SMITH	DRE-80-24	80 GALLON GOLD SERIES ELECTRIC STORAGE TANK WATER HEATER, 24 KW ELEMENT, 109 GPH RECOVERY AT 90°F RISE, ASME 160 PSI GLASS LINED TANK CONSTRUCTION, 140°F TEMPERATURE SETTING. DIMENSIONS: 60" HIGH, 25.5" DIAMETER, 31" TOTAL WIDTH WEIGHT: 280 LBS EMPTY, 960 LBS FULL ELECTRICAL: 208V/3Ø/60, 66.6 FLA.	--	--
ET-1	AMTROL	ST-5-C	4.0 GALLON STAINLESS STEEL EXPANSION TANK, 200°F MAXIMUM OPERATING TEMP, 250 PSIG MAX WORKING PRESSURE, POLYPROPYLENE LINER, SHEEL CONSTRUCTED OF POWDER COATED STEEL DIMENSIONS: 8" DIAMETER x 14" HEIGHT	WALL	STEEL
ET-2	AMTROL	ST-12-C	THERMAL EXPANSION TANK WITH ACCEPTANCE VOLUME OF 6.4 GALLONS, RATED UP TO 250 PSIG WORKING PRESSURE AND 200°F OPERATING TEMPERATURE, HEAVY DUTY BUTYL DIAPHRAGM, POLYPROPYLENE LINER, STEEL SHEEL, 1-1/4" STAINLESS STEEL CONNECTION, ASME RATED TANK. WEIGHT: 100 LBS	WALL	STEEL
RCP-1	BELL AND GOSSETT	E3-6V/BUPYZ	OPEN SYSTEM RECIRCULATION PUMP, 230°F MAX TEMP, 36°F MIN TEMP, 150 PSI MAX SYSTEM PRESSURE, ADJUSTABLE THERMOSTAT, 1/2" LEAD-FREE BRASS UNION CONNECTIONS, E3 TIMER AND HIGH EFFICIENCY ECM MOTOR, 115V, 28 WATT.	WALL	--
RCP-2	BELL AND GOSSETT	E3-6V/BUPYZ	OPEN SYSTEM RECIRCULATION PUMP, 230°F MAX TEMP, 36°F MIN TEMP, 150 PSI MAX SYSTEM PRESSURE, ADJUSTABLE THERMOSTAT, 1/2" LEAD-FREE BRASS UNION CONNECTIONS, E3 TIMER AND HIGH EFFICIENCY ECM MOTOR, 115V, 28 WATT.	WALL	--
TP-1	PPP	LTP-1500	1-1/2" TAIL PIECE FLOOR DRAIN TRAP PRIMING ASSEMBLY, 1/2" BRAIDED STAINLESS STEEL PRIMING WATER LINE WITH 1/2" COMPRESSION FITTING, CHROME-PLATED ESCUTCHEONS FOR BOTH WALL TUBE AND MAKE UP WATER LINE.	UNDER SINK	--
TP-2	PPP	PT-4	FLUSH MOUNT ELECTRONIC TRAP PRIMING ASSEMBLY, SERVES UP TO 6 FLOOR DRAINS, ATMOSPHERIC VACUUM BREAKER, PRE-SET 24 HOUR CHARGE, MANUAL OVERRIDE SWITCH, 3/4" COPPER MANIFOLD, AND STANDARD IN-WALL CABINET. ELECTRICAL: 120V AC DIMENSIONS: 14"W x 16"H x 4"D	WALL	--
TMV-1	WATTS	LFUSG-B	1/2" THERMOSTATIC MIXING VALVE, 0.5 GPM MINIMUM FLOW, 120°F INLET TEMPERATURE, 110°F OUTLET, INTEGRAL CHECK VALVES, LEAD FREE BRASS BODY, LISTED TO ASSE 1070 AND LAMPO LISTED.	UNDER COUNTER	--
WHA-1	ZURN	Z1700	SHOKTROL WATER HAMMER ARRESTOR, INSTALL WITH GATE VALVE SHUTOFF. PROVIDE WITH 12"x12" CEILING ACCESS DOOR WHERE INSTALLED.	--	--
RD-1	ZURN	Z164	12" DIAMETER COMBINATION ROOF AND OVERFLOW DRAIN WITH LOW SILHOUTTE DOMES AND DOUBLE TOP-SET DECK PLATE, DURA-COATED CAST IRON BODIES WITH COMBINATION MEMBRANE FLASHING CLAMP / GRAVEL GUARDS, NO HUB OUTLET. 3" OUTLET SIZE.	ROOF	CAST IRON
DS-1	ZURN	Z199	DOWNSPOUT NOZZLE, ALL NICKEL BRONZE BODY, DECORATIVE FACE OF WALL FLANGE AND OUTLET. SEE PLAN FOR INLET SIZE.	WALL	BRONZE
HB-1	J.R. SMITH	5519	1/4 TURN NON-FREEZE WALL HYDRANT, AUTOMATIC DRAINING, STAINLESS STEEL FACE, INTEGRAL VACUUM BREAKER AND DUAL CHECK VALVE, "T" HANDLE KEY, 3/4" NPT CONNECTION. TAMPER PROOF LOCKING ENCLOSURE, LOCATE 24" ABOVE FINISHED GRADE OR ROOF SURFACE UNLESS OTHERWISE SPECIFIED.	WALL	BRONZE
HB-2	WOODFORD	SRH-MS	FREEZELESS SANITARY ROOF HYRDANT ASSE 1057 LISTED, NO DRAIN LINE REQUIRED, 3/4" INLET CONNECTION, 100 PSI MAX WORKING PRESSURE, MAX TEMP 120°F, ASSE 1052 DUAL CHECK BACKFLOW PREVENTER AND DRAIN, CAST IRON HYDRANT SUPPORT MOUNTING SYSTEM WITH UNDERDECK FLANGE, AND EPDM BOOT COVER	ROOF	--

PLUMBING FIXTURE CONNECTION SCHEDULE

ID	Description	Accessible	Connection Size (Inches)			
			Waste	Vent	CW	HW
WC-1	WATER CLOSET	YES	4"	2"	1-1/2"	--
UR-1	URINAL	YES	2"	1-1/2"	1/2"	--
L-1	LAVATORY	YES	2"	1-1/2"	1/2"	1/2"
SK-1	SINK	--	2"	1-1/2"	1/2"	1/2"
SK-2	SINK	--	2"	1-1/2"	1/2"	1/2"
SK-3	SINK	--	2"	1-1/2"	1/2"	1/2"
MS-1	MOP SINK	NO	3"	1-1/2"	1/2"	1/2"
MS-2	MOP SINK	NO	4"	1-1/2"	1/2"	1/2"
FS-1	FLOOR SINK	--	3"	1-1/2"	--	--
FD-1	FLOOR DRAIN	--	2"	1-1/2"	1/2"	--
DF-1	DRINKING FOUNTAIN	YES	2"	1-1/2"	1/2"	--
HB-1	HOSE BIBB	--	--	--	3/4"	--
HB-2	HOSE BIBB	--	--	--	3/4"	--

Copyright © 2025

All ideas, designs, arrangements and plans indicated or represented by this drawing are owned by, and the property of, NICHOLS, MELBURG and ROSSETTO and were created, evolved and developed for use on, and in conjunction with, the specified project. None of such ideas, designs, arrangements or plans shall be used by, or disclosed to any person, firm or corporation for any purpose whatsoever without the written permission of NICHOLS, MELBURG and ROSSETTO.

NICHOLS MELBURG & ROSSETTO
ARCHITECTS + ENGINEERS
300 KNOLLCREST DRIVE
REDDING, CA. 96002
(530) 222-3300 (530) 222-3538 FAX
http://www.nmrdesign.com

CONSULTANTS

FRONTIER CONSULTING ENGINEERS
2727 Bechelli Lane - Redding, CA 96002
Ph: (530) 232-6160 - www.frontierce.com

LICENSE STAMPS

REGISTERED PROFESSIONAL ENGINEER
JASON J. ADAMS
No. M38571
EXP. 9-30-2025
MECHANICAL
STATE OF CALIFORNIA

PROJECT NAME

TEHAMA COUNTY CORNING VETERAN'S HALL

1620 SOLANO ST.
CORNING, CA

SHEET TITLE

PLUMBING LEGEND AND SCHEDULES

DRAWING STATUS

CONSTRUCTION DOCUMENTS

REVISIONS

Sym.	Description	Date

Drawn By	EG
Date Issued	2/13/2025
Scale	1/8" = 1'-0"
Project No.	21-6497

SHEET No.

P100

DEMOLITION GENERAL NOTES:

1. FIELD-VERIFY EXISTING CONSTRUCTION DEPICTED IN THESE DRAWINGS AS IT IS UNCOVERED DURING CONSTRUCTION. NOTIFY THE COUNTY PROMPTLY IF EXISTING CONDITIONS ARE NOT AS INDICATED.
2. COORDINATE DEMOLITION WORK OF ALL DISCIPLINES WITH LOCATIONS AND DIMENSIONS OF NEW CONSTRUCTION INDICATED IN THESE DRAWINGS. PRIOR TO COMMENCING ANY DEMOLITION WORK, COORDINATE WITH APPROVED SHOP DRAWINGS AND MANUFACTURER'S DATA FOR NEW SYSTEMS, EQUIPMENT, FEATURES OF CONSTRUCTION AND TEMPORARY AND FINAL CONDITIONS AS INDICATED INTHESE DOCUMENTS
3. DEMOLITION AND REMOVAL OF EXISTING CONSTRUCTION, FIXTURES, EQUIPMENT, AND FINISHES SHALL BE PERFORMED IN A NEAT, WORKMANLIKE MANNER, WITH CLEAN, STRAIGHT EDGES SUITABLE TO ACCOMMODATE NEW CONSTRUCTION, WHERE APPLICABLE.
4. ALL EXISTING CONSTRUCTION, FIXTURES, EQUIPMENT AND FINISHES TO REMAIN SHALL BE PROTECTED FROM DAMAGE DURING DEMOLITION AND NEW CONSTRUCTION.
5. AT WALLS TO BE REMOVED, WORK SHALL INCLUDE REMOVAL AND CAPPING OFF OF ALL MECHANICAL, PLUMBING, AND RELATED PIPING, FIXTURES, CONDUIT, CABLING AND ALL OTHER EQUIPMENT WITHIN WALLS.
6. REMOVE ALL PIPING, FIXTURES AND HANGERS UNLESS OTHERWISE NOTED.

KEYED NOTES:

1. EXISTING BOILER LOCATED BELOW STAGE SHALL REMOVED. REMOVE ALL PUMPS, PIPING, FLUES, VALVES, SENSORS, ELECTRICAL CONNECTIONS, WIRING, AND DISTRIBUTION PIPING THROUGHOUT BUILDING SERVING HYDRONIC HEATERS AND MAKEUP WATER SYSTEM. PIPING SHALL BE REMOVED TO PREVENT ANY DEAD LEG PIPING.
2. VERIFY POINT OF DISCONNECTION PER CIVIL DRAWINGS.
3. REMOVE PLUMBING FIXTURE AND WATER AND WASTE PIPING.
4. DISCONNECT EXISTING WATER AND ELECTRICAL CONNECTIONS FROM EXISTING WATER HEATERS. WATER HEATER SHALL BE RELOCATED. SEE NEW PLANS FOR LOCATION.
5. REMOVE EXPOSED GAS PIPING ALONG WALL AND MECHANICAL SHUTOFF VALVE.
6. REMOVE EXISTING GAS SERVICE AND DISTRIBUTION PIPING SERVING BUILDING NORTH OF THE VETERAN'S HALL. COORDINATE REMOVAL OF GAS SERVICE WITH PG&E.

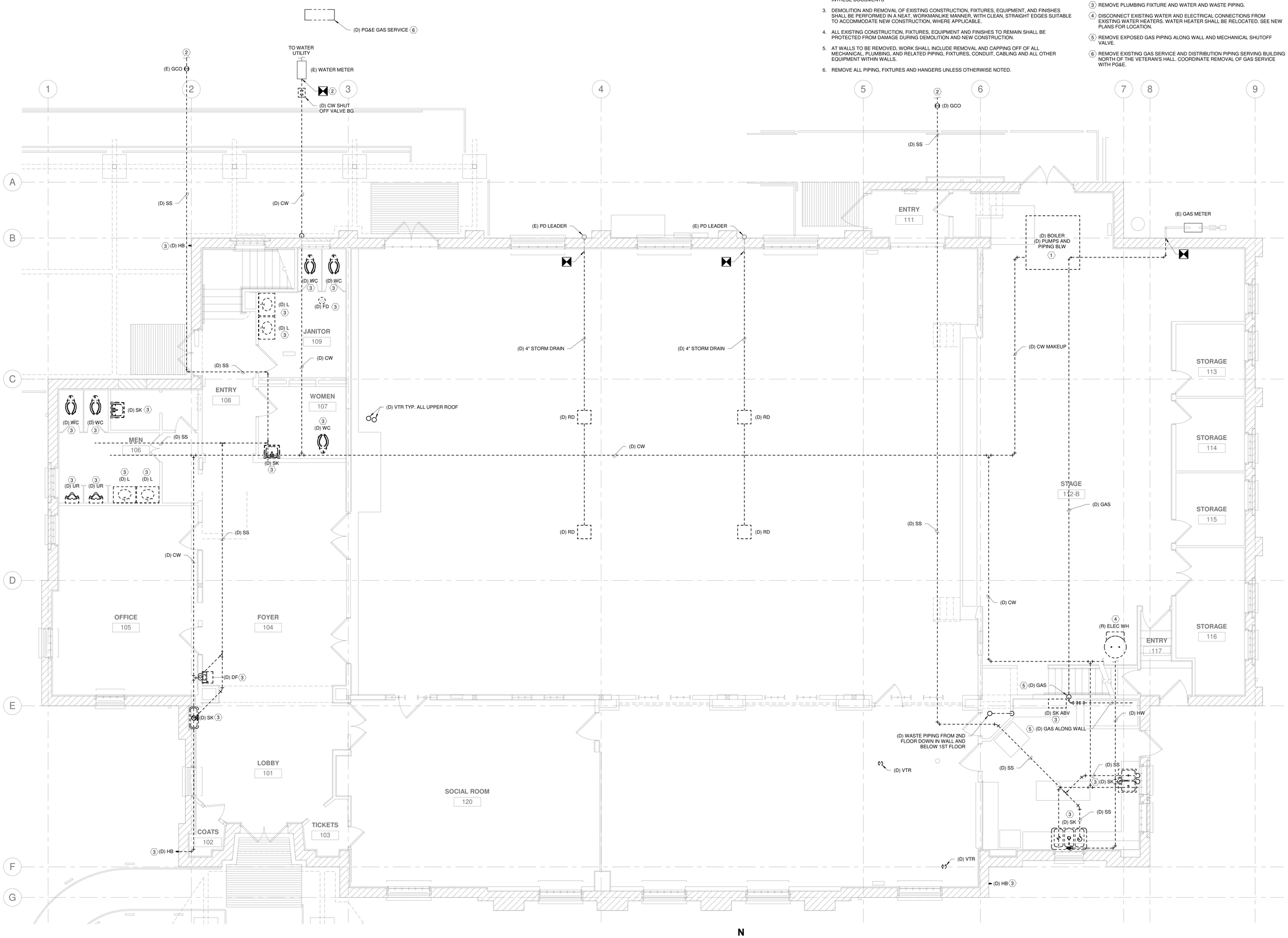

1 P200 PLUMBING DEMOLITION PLAN
1/4" = 1'-0"

N

Copyright © 2025
All ideas, designs, arrangements and plans indicated or represented by this drawing are owned by, and the property of, NICHOLS, MELBURG and ROSSETTO and were created, evolved and developed for use on, and in conjunction with, the specified project. None of such ideas, designs, arrangements or plans shall be used by, or disclosed to any person, firm or corporation for any purpose whatsoever without the written permission of NICHOLS, MELBURG and ROSSETTO.

NICHOLS MELBURG & ROSSETTO
ARCHITECTS + ENGINEERS
300 KNOLLCREST DRIVE
REDDING, CA 96002
(530) 222-3300 (530) 222-3538 FAX
http://www.nmrdesign.com

CONSULTANTS

FRONTIER CONSULTING ENGINEERS
2727 Bechelli Lane · Redding, CA 96002
Ph. (530) 232-6160 · www.frontierce.com

LICENSE STAMPS

REGISTERED PROFESSIONAL ENGINEER JASON T. ALMAS
Lic No. M38824
EXP. 9-30-2025
MECHANICAL
STATE OF CALIFORNIA

PROJECT NAME

TEHAMA COUNTY CORNING VETERAN'S HALL

1620 SOLANO ST.
CORNING, CA

SHEET TITLE

PLUMBING DEMOLITION PLAN

DRAWING STATUS

CONSTRUCTION DOCUMENTS

REVISIONS

Sym.	Description	Date

Drawn By	EG
Date Issued	2/13/2025
Scale	1/4" = 1'-0"
Project No.	21-6497

SHEET No.

P200

GENERAL NOTES:

1. ALL WATER PIPING LOCATED OUTDOORS, IN UNCONDITIONED SPACES AND EXTERIOR WALLS SHALL BE INSULATED.

KEYED NOTES:

1. SEE CIVIL DRAWINGS FOR CONTINUATION.
2. ROUTE 4" GREASE WASTE TO NEW 1000 GALLON GREASE INTERCEPTOR. SEE CIVIL FOR CONTINUATION.

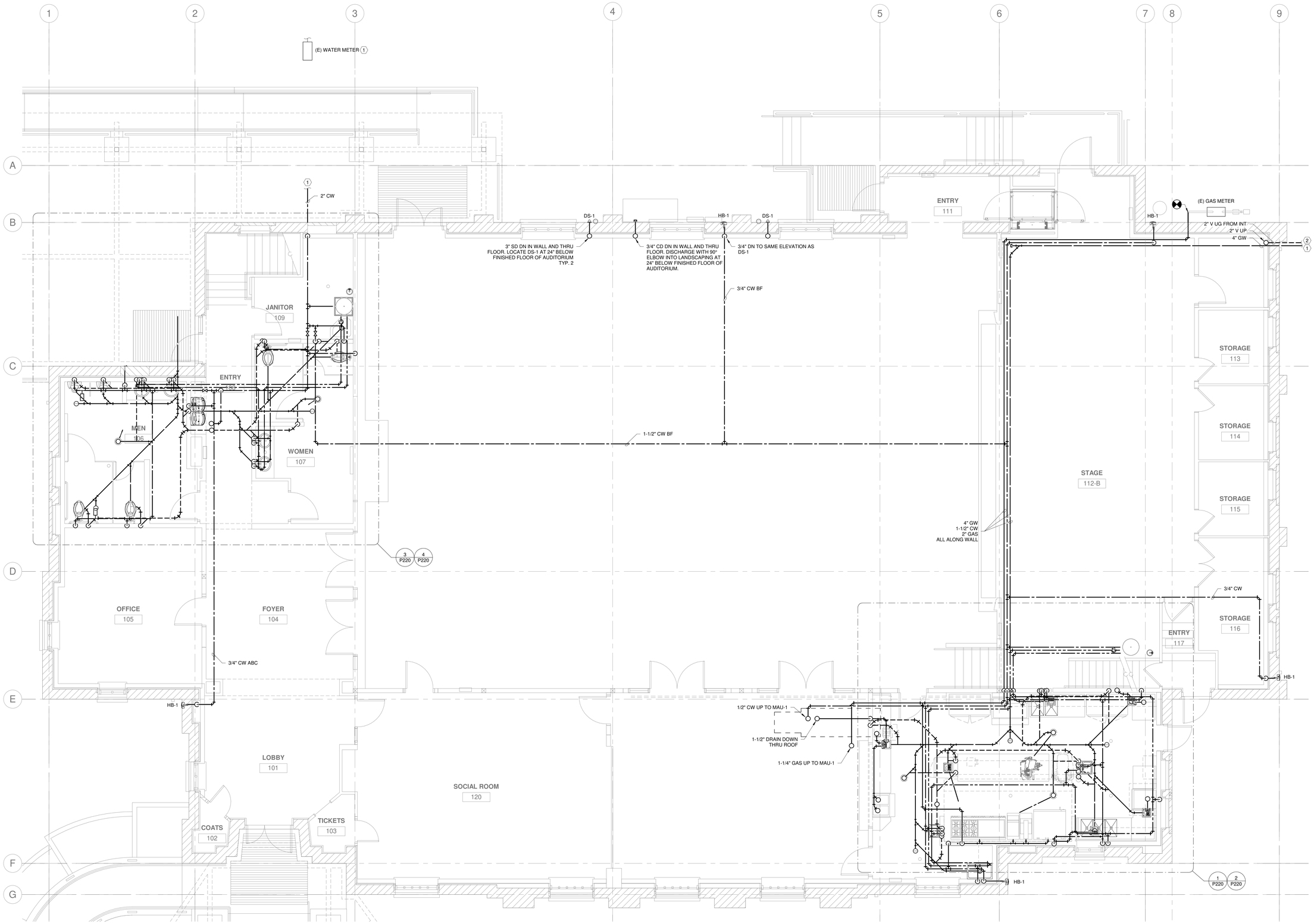

1 P210 PLUMBING FIRST FLOOR PLAN
1/4" = 1'-0"

N

Copyright © 2025

All ideas, designs, arrangements and plans indicated or represented by this drawing are owned by, and the property of, NICHOLS, MELBURG and ROSSETTO and were created, evolved and developed for use on, and in conjunction with, the specified project. None of such ideas, designs, arrangements or plans shall be used by, or disclosed to any person, firm or corporation for any purpose whatsoever without the written permission of NICHOLS, MELBURG and ROSSETTO.

NICHOLS MELBURG & ROSSETTO
ARCHITECTS + ENGINEERS
300 KNOLLCREST DRIVE
REDDING, CA. 96002
(530) 222-3300 (530) 222-3538 FAX
http://www.nmrdesign.com

CONSULTANTS

FRONTIER
CONSULTING ENGINEERS
2727 Bechelli Lane · Redding, CA 96002
Ph. (530) 232-6160 · www.frontierce.com

LICENSE STAMPS

REGISTERED PROFESSIONAL ENGINEER
JASON J. ADAMS
Lic. No. M38674
EXP. 9-30-2025
MECHANICAL
STATE OF CALIFORNIA

PROJECT NAME

TEHAMA COUNTY CORNING VETERAN'S HALL

1620 SOLANO ST.
CORNING, CA

SHEET TITLE

PLUMBING FIRST FLOOR PLAN

DRAWING STATUS

CONSTRUCTION DOCUMENTS

REVISIONS

Sym.	Description	Date

Drawn By	EG
Date Issued	2/13/2025
Scale	1/4" = 1'-0"
Project No.	21-6497

SHEET No.

P210

KEYED NOTES:

1. CONDENSATE PIPING SHALL BE SUPPORTED BY DURA-BLOK ROOFTOP SUPPORTS EVERY 6" MAXIMUM AND AT EACH CHANGE OF DIRECTION.
2. PRIMARY AND SECONDARY STORM DRAINAGE PIPING SHALL BE INSTALLED AS HIGH AS POSSIBLE AND SHALL SLOPE AT 1/8" PER FOOT.
3. MAINATAIN 10 FEET CLEARANCE BETWEEN VENTS THRU ROOF AND OUTSIDE AIR INTAKES.

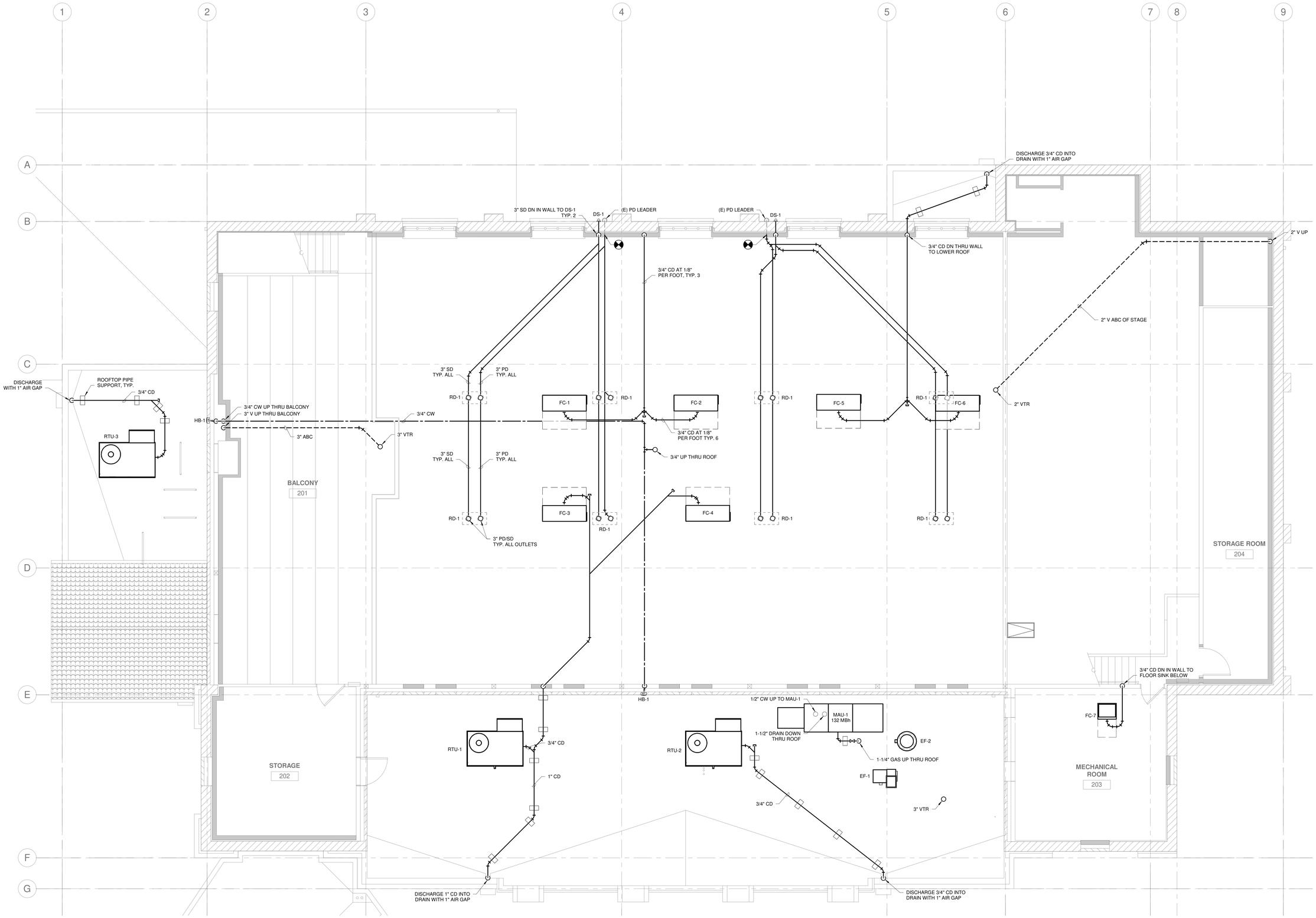

1 P211 PLUMBING SECOND FLOOR PLAN
1/4" = 1'-0"

Copyright © 2025

All ideas, designs, arrangements and plans indicated or represented by this drawing are owned by, and the property of, NICHOLS, MELBURG and ROSSETTO and were created, evolved and developed for use on, and in conjunction with, the specified project. None of such ideas, designs, arrangements or plans shall be used by, or disclosed to any person, firm or corporation for any purpose whatsoever without the written permission of NICHOLS, MELBURG and ROSSETTO.

NICHOLS MELBURG & ROSSETTO
ARCHITECTS + ENGINEERS
300 KNOLLCREST DRIVE
REDDING, CA. 96002
(530) 222-3300 (530) 222-3538 FAX
http://www.nmrdesign.com

CONSULTANTS

FRONTIER CONSULTING ENGINEERS
2727 Bechelli Lane · Redding, CA 96002
Ph. (530) 232-6160 · www.frontierce.com

LICENSE STAMPS

REGISTERED PROFESSIONAL ENGINEER
JASON J. ADAMS
Lic. No. M38874
EXP. 9-30-2025
MECHANICAL
STATE OF CALIFORNIA

PROJECT NAME

TEHAMA COUNTY CORNING VETERAN'S HALL

1620 SOLANO ST.
CORNING, CA

SHEET TITLE

PLUMBING SECOND FLOOR PLAN

DRAWING STATUS

CONSTRUCTION DOCUMENTS

REVISIONS

Sym.	Description	Date

Drawn By	EG
Date Issued	2/13/2025
Scale	1/4" = 1'-0"
Project No.	21-6497

SHEET No.

P211

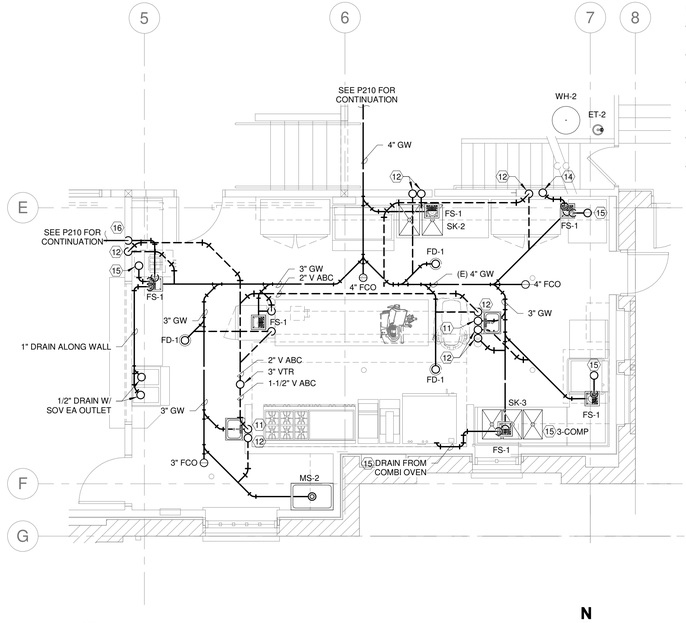

KEYED NOTES:

11. 2" WASTE DOWN, 1-1/2" VENT UP IN WALL. PROVIDE WITH 2" WALL CLEANOUT.
12. 1-1/2" VENT UP IN WALL. CONNECT VENT PIPE IN WALL 6" ABOVE RIM OF TALLEST FIXTURE.
13. 2" VENT UP IN WALL. CONNECT VENT PIPE IN WALL 6" ABOVE RIM OF TALLEST FIXTURE.
14. 3/4" CONDENSATE DOWN IN WALL TO MOP SINK OR FLOOR SINK WITH 90° ELBOW. DISCHARGE WITH 1" AIR GAP.
15. DISCHARGE INDIRECT DRAINAGE FROM FIXTURE OR APPLIANCE INTO FLOOR SINK WITH 1" AIR GAP.
16. 1-1/2" MAU DRAIN DOWN IN WALL TO FS-1. DISCHARGE WITH 1" AIR GAP.

2 P220 ENLARGED KITCHEN PLUMBING PLAN - DWV

1/4" = 1'-0"

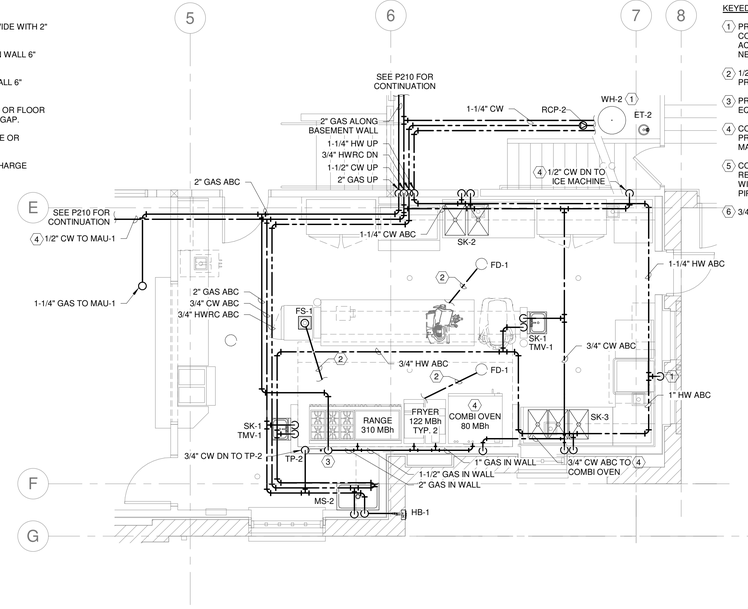

KEYED NOTES:

1. PROVIDE 3/4" VALVED HOT WATER DOWN IN WALL TO DISHWASHER AND CONNECT. PROVIDE ASSE 1013 BACKFLOW PREVENTER ON DHW LINE IN AN ACCESSIBLE LOCATION. PROVIDE DRAIN LINE FROM BACKFLOW PREVENTER TO NEAREST DRAIN. PROVIDE PRESSURE REGULATOR AND BALANCE TO 20-25 PSI.
2. 1/2" COLD WATER BELOW FLOOR TO FLOOR DRAIN OR FLOOR SINK FROM TRAP PRIMER.
3. PROVIDE AND INSTALL NEW MECHANICAL GAS SHUTOFF VALVE FOR KITCHEN EQUIPMENT SHUTDOWN. INTERLOCK WITH ANSUL SYSTEM AT EH-1.
4. COORDINATE WATER REQUIREMENTS WITH EQUIPMENT MANUFACTURER. PROVIDE ALL FILTERS AND ION EXCHANGERS AS INDICATED BY MANUFACTURER'S RECOMMENDATIONS.
5. COORDINATE FINAL ROUTING OF NATURAL GAS HOT WATER, HOT WATER RECIRCULATION AND COLD WATER PIPING IN BASEMENT TO AVOID CONFLICT WITH STAIRS. PIPING SHALL BE TIGHT TO WALLS AND CEILING FRAMING ABOVE. PIPING WITHIN KITCHEN SPACE SHALL BE RUN ABOVE CEILING.
6. 3/4" HOT AND COLD WATER TO MOP SINK

1 P220 ENLARGED KITCHEN PLUMBING PLAN - WATER AND GAS

1/4" = 1'-0"

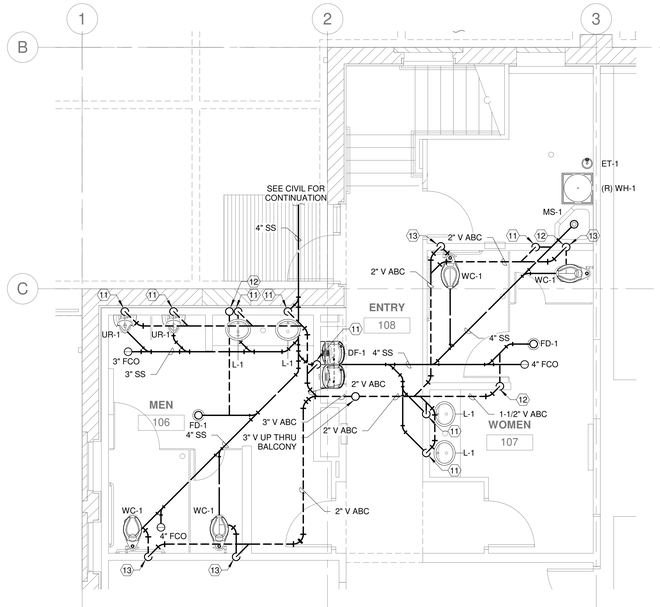

4 P220 ENLARGED RESTROOM PLUMBING PLAN - DWV

1/4" = 1'-0"

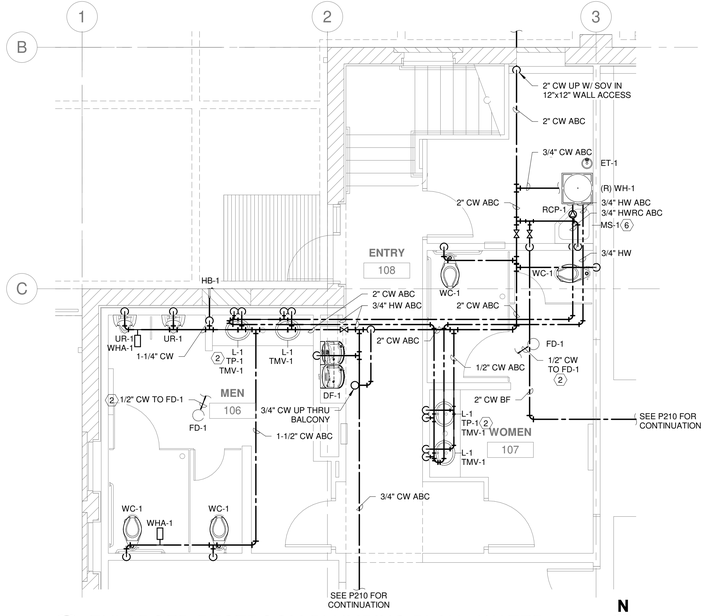

3 P220 ENLARGED RESTROOM PLUMBING PLAN - WATER

1/4" = 1'-0"

Copyright © 2025

All ideas, designs, arrangements and plans indicated or represented by this drawing are owned by, and the property of, NICHOLS, MELBURG and ROSSETTO and were created, evolved and developed for use on, and in conjunction with, the specified project. None of such ideas, designs, arrangements or plans shall be used by, or disclosed to any person, firm or corporation for any purpose whatsoever without the written permission of NICHOLS, MELBURG and ROSSETTO.

NICHOLS MELBURG & ROSSETTO
ARCHITECTS + ENGINEERS
300 KNOLLCREST DRIVE
REDDING, CA 96002
(530) 222-3300 (530) 222-3538 FAX
http://www.nmrdesign.com

CONSULTANTS

FRONTIER CONSULTING ENGINEERS
2727 Bechelli Lane · Redding, CA 96002
Ph. (530) 232-6160 · www.frontierce.com

LICENSE STAMPS

REGISTERED PROFESSIONAL ENGINEER JASON T. ADAMS No. M38847 EXP. 9-30-2025 MECHANICAL STATE OF CALIFORNIA

PROJECT NAME

TEHAMA COUNTY CORNING VETERAN'S HALL

1620 SOLANO ST.
CORNING, CA

SHEET TITLE

ENLARGED PLUMBING PLANS

DRAWING STATUS

CONSTRUCTION DOCUMENTS

REVISIONS

Sym.	Description	Date

Drawn By	EG
Date Issued	2/13/2025
Scale	1/4" = 1'-0"
Project No.	21-6497

SHEET No.

P220

GENERAL NOTES:

1. MAINTAIN 10 FEET CLEARANCE BETWEEN VENTS THRU ROOF AND OUTSIDE AIR INTAKES.

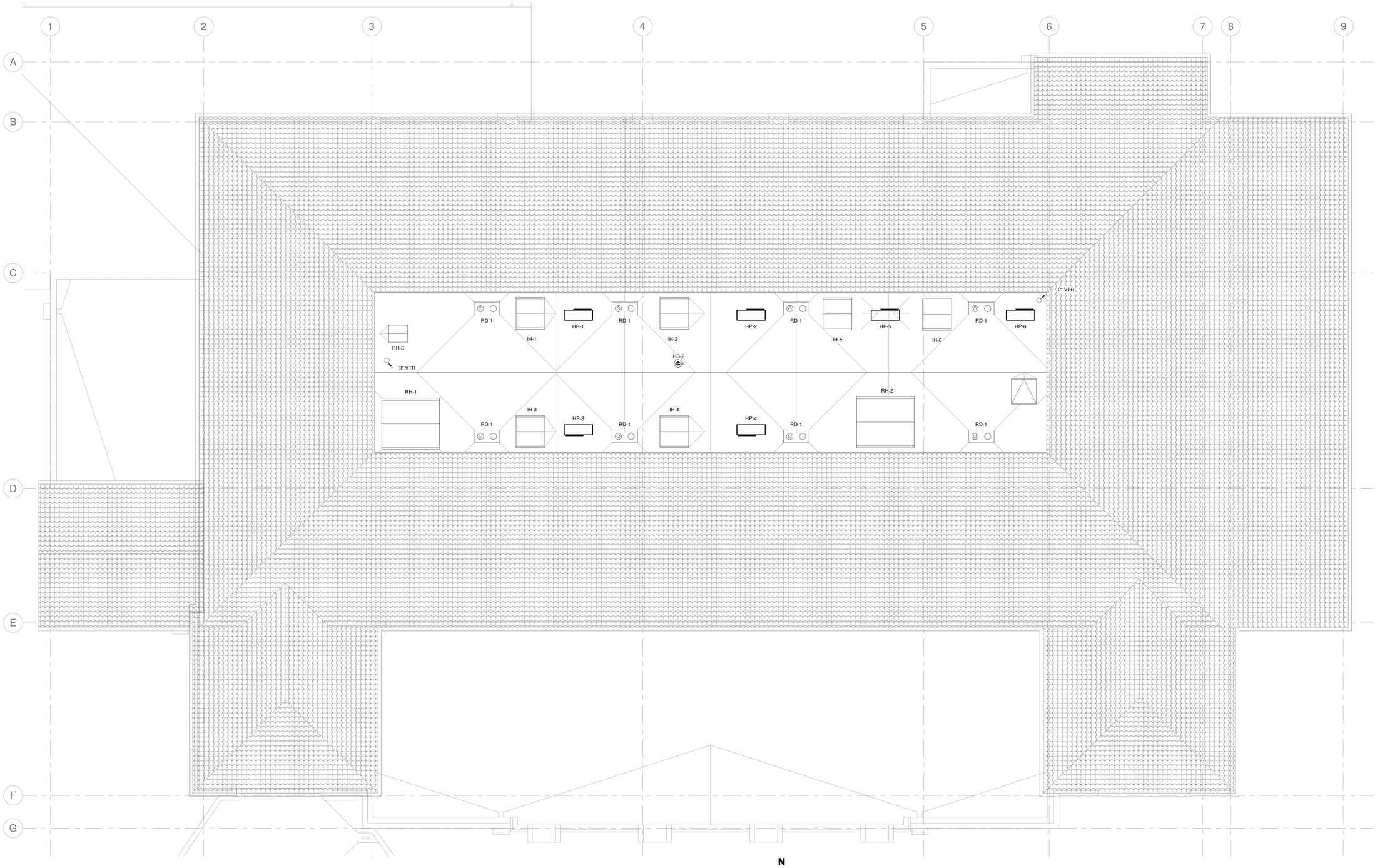

1 P240 PLUMBING ROOF PLAN
1/4" = 1'-0"

N

Copyright © 2025

All ideas, designs, arrangements and plans indicated or represented by this drawing are owned by, and the property of, NICHOLS, MELBURG and ROSSETTO and were created, evolved and developed for use on, and in conjunction with, the specified project. None of such ideas, designs, arrangements or plans shall be used by, or disclosed to any person, firm or corporation for any purpose whatsoever without the written permission of NICHOLS, MELBURG and ROSSETTO.

NICHOLS MELBURG & ROSSETTO
ARCHITECTS + ENGINEERS
300 KNOLLCREST DRIVE
REDDING, CA. 96002
(530) 222-3300 (530) 222-3538 FAX
http://www.nmrdesign.com

CONSULTANTS

FRONTIER
CONSULTING ENGINEERS
2727 Bechelli Lane · Redding, CA 96002
Ph. (530) 232-6160 · www.frontierce.com

LICENSE STAMPS

REGISTERED PROFESSIONAL ENGINEER
JASON J. ADAMS
Reg. No. M38874
EXP. 9-30-2025
MECHANICAL
STATE OF CALIFORNIA

PROJECT NAME

TEHAMA COUNTY
CORNING
VETERAN'S HALL

1620 SOLANO ST.
CORNING, CA

SHEET TITLE

PLUMBING ROOF PLAN

DRAWING STATUS

CONSTRUCTION DOCUMENTS

REVISIONS

Sym.	Description	Date

Drawn By	EG
Date Issued	2/13/2025
Scale	1/4" = 1'-0"
Project No.	21-6497

SHEET No.

P240

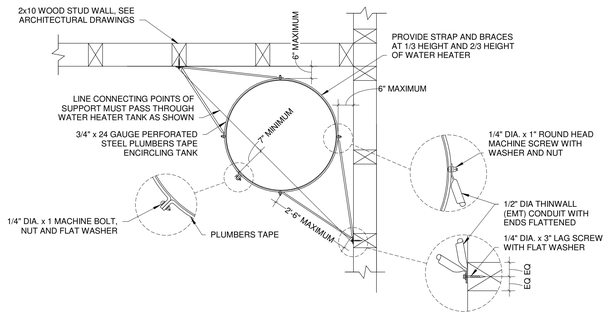

3 P300 WATER HEATER RESTRAINT DETAIL

NOT TO SCALE

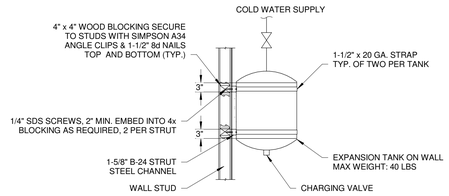

2 P300 EXPANSION TANK DETAIL

NOT TO SCALE

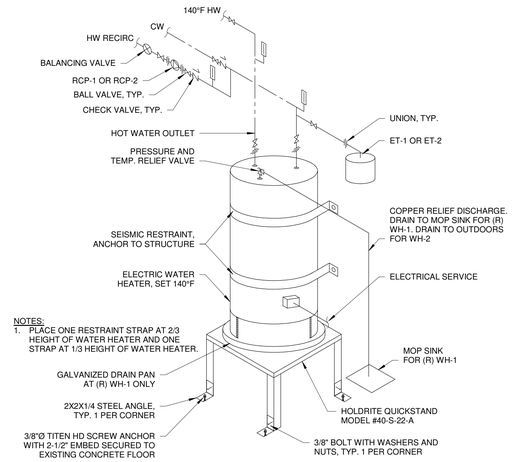

NOTES:
1. PLACE ONE RESTRAINT STRAP AT 2/3 HEIGHT OF WATER HEATER AND ONE STRAP AT 1/3 HEIGHT OF WATER HEATER.

1 P300 ELECTRIC WATER HEATER DETAIL

NOT TO SCALE

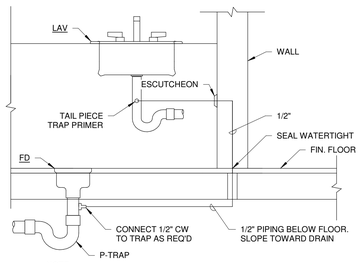

NOTE:
1. INSTALL FLOOR DRAIN TRAP PRIMERS ON ALL FLOOR DRAINS.
2. TRAP PRIMER SHALL BE INSTALLED PER MANUFACTRURERS INSTRUCTIONS.

6 P300 FLOOR DRAIN TRAP PRIMER DETAIL

NOT TO SCALE

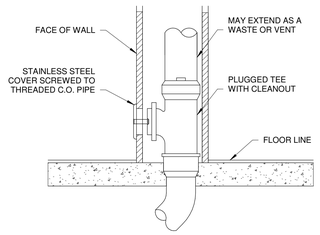

NOTES:
1. POSITION PIPE TO AVOID OBSTRUCTIONS TO CLEAN-OUTS.
2. PROVIDE C.O. AT ALL VERTICAL SANITARY/VENT STACKS.

5 P300 WALL CLEAN-OUT DETAIL

NOT TO SCALE

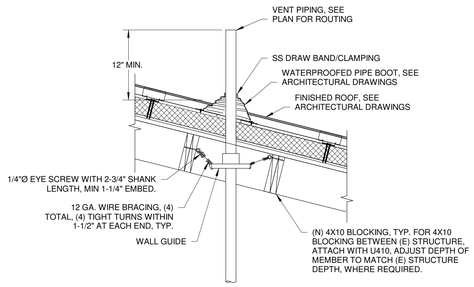

4 P300 VENT THROUGH ROOF DETAIL

NOT TO SCALE

NOTES:
1. PLACE SUPPORTS AT 8'-0" ON CENTER AND AT ALL CHANGES IN DIRECTION.

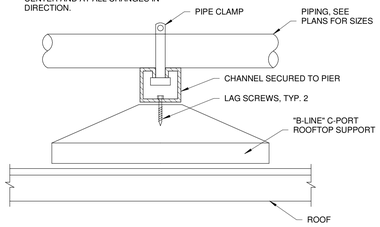

ELEVATION

9 P300 PIPE SUPPORT ON ROOF DETAIL

NOT TO SCALE

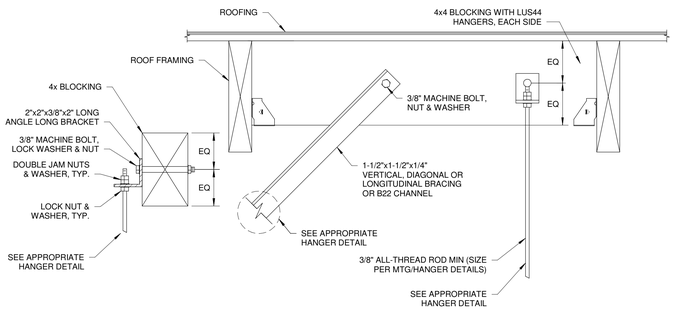

8 P300 TYPICAL PIPE HANGER CONNECTION DETAILS

NOT TO SCALE

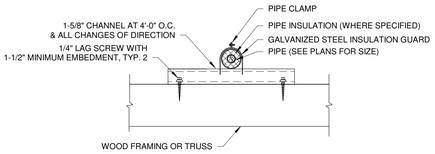

7 P300 TYPICAL PIPE SUPPORT

NOT TO SCALE

PIPE HANGER SCHEDULE		
TYPE OF PIPE	SIZE OF PIPE	HANGER SPACING
STEEL THREADED PIPE	3/4" SIZE AND SMALLER 1" SIZE AND LARGER	10 FT. INTERVALS 12 FT. INTERVALS
COPPER TUBE	1-1/4" SIZE AND SMALLER 1-1/2" SIZE AND LARGER	6 FT. INTERVALS 10 FT. INTERVALS
PLASTIC PIPE	ALL SIZES	4 FT. INTERVALS PROVIDE SUPPORTS AT END OF ALL BRANCHES AND AT ALL CHANGES OF DIRECTION & ELEVATION.
CAST IRON PIPE	ALL SIZES	MINIMUM OF 1 HANGER PER PIPE LENGTH LOCATED WITHIN 18" OF EACH JOINT (UP TO 10 FT. MAXIMUM), AT CHANGES IN DIRECTION AND AT BRANCH CONNECTIONS

NOTES:

1. RUN PIPING TRAPEZE AS CLOSE AS POSSIBLE TO STRUCTURE.
2. SUPPORT PIPING AT A MAXIMUM OF 8'-0" INTERVALS
3. SEE PLANS FOR PIPE SIZES
4. CHANNEL DEFLECTION SHALL NOT EXCEED 1/360 OF SPAN BETWEEN RODS. DOUBLE-UP CHANNELS AS REQUIRED
5. PROVIDE "B-LINE" CHANNEL ROD STIFFENER AT ALL-THREAD WHERE DIAGONAL BRACE OCCURS. INCLUDE SC228 ASSEMBLY AS RECOMMENDED BY MANUFACTURER.
6. NO BRACING REQUIRED ON PIPES WITH LESS THAN 1" I.D. AND ALL OTHER PIPES LESS THAN 2-1/2"

TRAPEZE LOAD & SUPPORT CONDITIONS:
HEAVY: 645 LBS PER TRAPEZE OR MORE: 1/2" ALL-THREAD TO STEEL
NOT HEAVY: LESS THAN 645 LBS PER TRAPEZE 3/8" ALL-THREAD TO CONCRETE DECK

TABLE 1	
Angle (Inches)	Max. Length (Inches)
1-1/2 x 1-1/2 x 1/8	3'-0"
2 x 2 x 3/16	6'-0"
3 x 3 x 1/4	8'-0"

MINIMUM ROD SIZES	
Min.Rod Sizes (Inches)	Pipe Diameter
3/8	2" AND SMALLER PIPE
1/2	2-1/2" AND 3" PIPE
5/8	4" PIPE

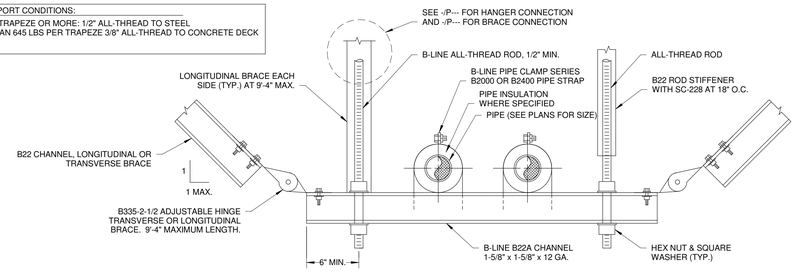

10 P300 TYPICAL PIPE HANGER

NOT TO SCALE

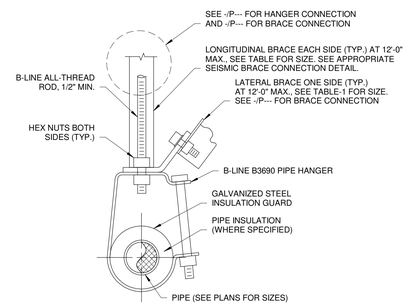

Copyright © 2025
All ideas, designs, arrangements and plans indicated or represented by this drawing are owned by, and the property of, NICHOLS, MELBURG and ROSSETTO and were created, evolved and developed for use on, and in conjunction with, the specified project. None of such ideas, designs, arrangements or plans shall be used by, or disclosed to any person, firm or corporation for any purpose whatsoever without the written permission of NICHOLS, MELBURG and ROSSETTO.

NICHOLS MELBURG ROSSETTO
ARCHITECTS + ENGINEERS
300 KNOLLCREST DRIVE
REDDING, CA 96002
(530) 222-3300 (530) 222-3538 FAX
http://www.nmrdesign.com

CONSULTANTS

FRONTIER CONSULTING ENGINEERS
2727 Bechelli Lane · Redding, CA 96002
Ph. (530) 232-6160 · www.frontierce.com

LICENSE STAMPS

REGISTERED PROFESSIONAL ENGINEER JASON T. ADAMS
M38824
EXP. 9-30-2025
MECHANICAL
STATE OF CALIFORNIA

PROJECT NAME

TEHAMA COUNTY CORNING VETERAN'S HALL

1620 SOLANO ST.
CORNING, CA

SHEET TITLE

PLUMBING DETAILS

DRAWING STATUS

CONSTRUCTION DOCUMENTS

REVISIONS

Sym.	Description	Date

Drawn By	EG
Date Issued	2/13/2025
Scale	1/8" = 1'-0"
Project No.	21-6497

SHEET No.

P300

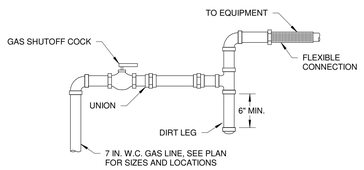

3 P301 GAS CONNECTION DETAIL
NOT TO SCALE

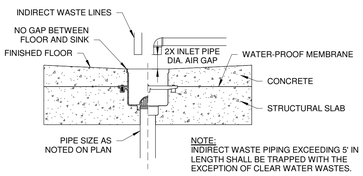

2 P301 FLOOR SINK DETAIL
NOT TO SCALE

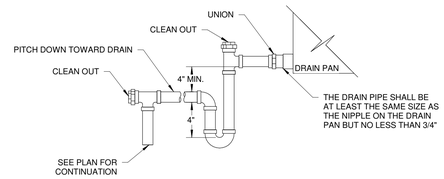

1 P301 HVAC CONDENSATE DRAIN DETAIL
NOT TO SCALE

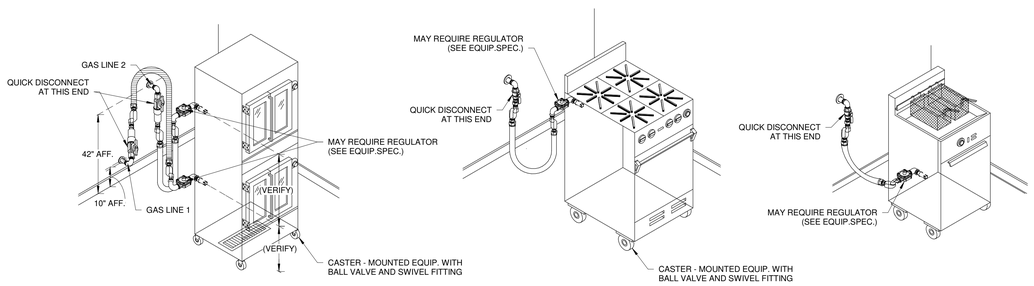

4 P301 TYPICAL GAS CONNECTION DETAILS
NOT TO SCALE

Copyright © 2025
All ideas, designs, arrangements and plans indicated or represented by this drawing are owned by, and the property of, NICHOLS, MELBURG and ROSSETTO and were created, evolved and developed for use on, and in conjunction with, the specified project. None of such ideas, designs, arrangements or plans shall be used by, or disclosed to any person, firm or corporation for any purpose whatsoever without the written permission of NICHOLS, MELBURG and ROSSETTO.

NICHOLS MELBURG & ROSSETTO
ARCHITECTS + ENGINEERS
300 KNOLLCREST DRIVE
REDDING, CA. 96002
(530) 222-3300 (530) 222-3538 FAX
http://www.nmrdesign.com

CONSULTANTS

FRONTIER
CONSULTING ENGINEERS
2727 Bechelli Lane · Redding, CA 96002
Ph. (530) 232-6160 · www.frontierce.com

LICENSE STAMPS

REGISTERED PROFESSIONAL ENGINEER
JASON J. ADAMS
No. M38874
EXP. 9-30-2025
MECHANICAL
STATE OF CALIFORNIA

PROJECT NAME

TEHAMA COUNTY
CORNING
VETERAN'S HALL

1620 SOLANO ST.
CORNING, CA

SHEET TITLE

PLUMBING DETAILS

DRAWING STATUS

CONSTRUCTION DOCUMENTS

REVISIONS

Sym.	Description	Date

Drawn By	ML
Date Issued	2/13/2025
Scale	1/8" = 1'-0"
Project No.	21-6497

SHEET No.

P301

ABBREVIATIONS

4S/DP	4" SQUARE BY 2-1/8" DEEP BOX
ADA	AMERICAN WITH DISABILITIES ACT
A.F.F.	ABOVE FINISH FLOOR
A.F.G.	ABOVE FINISH GRADE
AWG	AMERICAN WIRE GAUGE
AMP, A	AMPERE
A.I.C. or AIC	AMPERES INTERRUPTING CAPACITY (SYMMETRICAL)
A.F.C. or AFC	AVAILABLE FAULT CURRENT
AF/AT	AMP FRAME, AMP TRIP
AHJ	AUTHORITY HAVING JURISDICTION
AS/AF	AMP SWITCH, AMP FUSE
ATS	AUTOMATIC TRANSFER SWITCH
AVG	AVERAGE
BJ	BONDING JUMPER
BDF	BUILDING DISTRIBUTION FRAME
BR	BRANCH
BLDG	BUILDING
CBC	CALIFORNIA BUILDING CODE
CEC	CALIFORNIA ELECTRICAL CODE
CIRC., CKT.	CIRCUIT
CB	CIRCUIT BREAKER
CSFD	COMBINATION SMOKE FIRE DAMPER
C	CONDUIT
C.O.	CONDUIT ONLY, COMPLETE WITH PULLSTRING
CONN	CONNECTED
CPT	CONTROL POWER TRANSFORMER
CLCB	CURRENT LIMITING CIRCUIT BREAKER
CLF	CURRENT LIMITING FUSE
CT	CURRENT TRANSFORMER
(D)	EXISTING DEVICE TO BE DEMOLISHED
DAS	DISTRIBUTED ANTENNA SYSTEM
DIA	DIAMETER
DISC	DISCONNECT
DIST	DISTRIBUTION
D.P.C.S.	DIMMING PANEL CONTROL STATION
E.C.	ELECTRICAL CONTRACTOR
EMS	ENERGY MANAGEMENT CONTROL SYSTEM
EMT	ELECTRICAL METALLIC TUBING
ENT	ELECTRICAL NON-METALLIC TUBING
EWC	ELECTRIC WATER COOLER
E.P.O.	EMERGENCY POWER OFF
E-O-L	END-OF-LINE CIRCUIT TERMINATOR
EF	EXHAUST FAN
EGC or EG or E/G	EQUIPMENT GROUND (GREEN)
(E)	EXISTING DEVICE TO REMAIN
EP	EXPLOSION PROOF
(ER)	EXISTING DEVICE TO BE RELOCATED
FT or '	FEET
FA or F.A.	FIRE ALARM
FLA	FULL LOAD AMPS
GRD	GROUND
GFCI	GROUND FAULT CIRCUIT INTERRUPTER
GFP	GROUND FAULT PROTECTION
GE or GEC	GROUNDING ELECTRODE CONDUCTOR
HACR	HEATING AIR CONDITIONING REFRIGERATION
HOA	HAND-OFF-AUTO
HVAC	HEATING, VENTILATING AND AIR CONDITIONING
H.,W.,D.,L.	HEIGHT, WIDTH, DEPTH, LENGTH
HID	HIGH INTENSITY DISCHARGE
HP	HORSEPOWER
HPS	HIGH PRESSURE SODIUM
IN. or "	INCHES
I/G	ISOLATED GROUND
IBC	INTERNATIONAL BUILDING CODE
I.D.C.S.	INTEGRATED DIMMING CONTROL PANEL
IDF	INTERMEDIATE DISTRIBUTION FRAME
JBOX	JUNCTION BOX
K	DEGREE KELVIN
KCMIL	THOUSAND CIRCULAR MILS
KVA	KILOVOLT AMPERES
KW	KILOWATT
KWH	KILOWATT HOUR
LCL	LONG CONTINUOUS LOAD
L.F., L.F.	LINEAR FEET
LTG, LTS	LIGHTING
LPS	LOW PRESSURE SODIUM
MAX.	MAXIMUM
MBJ	MAIN BONDING JUMPER
MDF	MAIN DISTRIBUTION FRAME
MOCP	MAXIMUM OVERCURRENT PROTECTION
MCB	MAIN CIRCUIT BREAKER
MLO	MAIN LUGS ONLY
M.C.	MECHANICAL CONTRACTOR
M	METER
MM	METER MAIN
MV	MERCURY VAPOR
MH	METAL HALIDE
MIN.	MINIMUM
MCA	MINIMUM CIRCUIT AMPS
MCC	MOTOR CONTROL CENTER
MCM	THOUSAND CIRCULAR MILS
MCP	MOTOR CIRCUIT PROTECTOR
MFR.	MANUFACTURER
MTD	MOUNTED
MW	MICROWAVE
NATS	NON AUTOMATIC DISCONNECT
NEC	NATIONAL ELECTRICAL CODE
NEMA	NATIONAL ELECTRICAL MANUFACTURER'S ASSOCIATION
NC	NORMALLY CLOSED
NO	NORMALLY OPENED
NF	NON-FUSED
NIC	NOT IN CONTRACT
N.T.S.	NOT TO SCALE
NL	NIGHT LIGHT
NO. or #	NUMBER
OFCI	OWNER FURNISHED, CONTRACTOR INSTALLED
%Z	PERCENT IMPEDANCE
PH. or ø	PHASE
PC	PHOTOCELL
P.C.	PLUMBING CONTRACTOR
P	POLE
PVC	POLY VINYL CHLORIDE
PDU	POWER DISTRIBUTION UNIT
PRIMARY	OVER 600 VOLTS
PROVIDE	FURNISH, INSTALL AND CONNECT
PT	POTENTIAL TRANSFORMER
PA	PUBLIC ADDRESS
(R)	DENOTES RELOCATED DEVICE LOCATION.
REC, RECEPT	RECEPTACLE
REF	REFRIGERATOR
RGS	RIGID GALVANIZED STEEL
RMS	ROOT MEAN SQUARE
SCC	SHORT CIRCUIT CURRENT
SCCR	SHORT CIRCUIT CURRENT RATING
SCS	STRUCTURED CABLING SYSTEM
SFD	SMOKE FIRE DAMPER
SECONDARY	600 VOLTS AND LESS
SMACNA	SHEET METAL AND AIR COND. CONTRACTOR'S NAT'L ASSOC.
SQ.	SQUARE
SSBJ	SUPPLY SIDE BONDING JUMPER
SBJ	SYSTEM BONDING JUMPER
TC	TIMECLOCK
TEL/DATA	TELEPHONE AND DATA
TV	TELEVISION
T.V.S.S.	TRANSIENT VOLTAGE SURGE SUPPRESSION
TYP	TYPICAL
U.G.P.S.	UNDERGROUND PULL SECTION
U.O.N.	UNLESS OTHERWISE NOTED
U.P.S. or UPS	UNINTERRUPTABLE POWER SYSTEM
VAV	VARIABLE AIR VOLUME
V	VOLTS
VA	VOLT AMPERES
VD	VOLTAGE DROP
WP	WEATHERPROOF
W	WIRE
XFMR	TRANSFORMER

FIRE ALARM SYSTEM SYMBOLS

SEE FIRE ALARM OR CENTRAL MONITORING SYSTEM DRAWINGS FOR FIRE ALARM SYMBOLS.

SECURITY INTRUSION ALARM SYSTEM SYMBOLS

SACP — SECURITY ALARM CONTROL PANEL AND POWER SUPPLY, COMPLETE - SEE SPECIFICATIONS.

WD — WALL MOUNTED WIRELESS RECEIVER COMPLETE WITH FLUSH 1-GANG DP J-BOX AND 1-GANG RING WITH 3/4"C AND CONDUCTORS TO SACP. - SEE SPECIFICATIONS.

KP — SECURITY ALARM KEY PAD, WITH FLUSH 1-GANG DP J-BOX AND 1-GANG RING WITH 3/4" C. AND CONDUCTORS TO SACP UNLESS OTHERWISE NOTED. SEE SPECIFICATIONS.

MS — WIRELESS SECURITY ALARM DUAL MOTION SENSOR, WALL OR CEILING (360-DEGREE) MOUNTED PER PLAN DRAWINGS. SEE SPECIFICATIONS. ARROW INDICATES DIRECTION OF AIM.

SX — WIRELESS SECURITY ALARM RECESSED DOOR CONTACTS - SEE SPECIFICATIONS.

HA — WALL MOUNTED LOCAL ALARM HORN WITH FLUSH 1-GANG DP J-BOX AND 1-GANG RING WITH 3/4"C AND CONDUCTORS TO SACP- SEE SPECIFICATIONS.

— S — SECURITY ALARM SYSTEM 3/4" CONDUIT WITH CONDUCTORS PER SECURITY ALARM RISER DIAGRAM AND / OR SPECIFICATIONS.

ANNOTATIONS

A — PANEL CALLOUT, "A" INDICATES PANELBOARD OR EQUIPMENT DESIGNATION.

AC 2 — MECHANICAL EQUIPMENT CALLOUT, "AC" INDICATES UNIT TYPE AND "2" INDICATES UNIT NUMBER. REFER TO MECHANICAL DRAWINGS FOR EXACT LOCATION AND ELECTRICAL REQUIREMENTS.

3 E-1 — DETAIL CALLOUT, "3" INDICATES DETAIL NUMBER "E-1" INDICATES SHEET NUMBER.

2 — PLAN NOTE REFERENCE, REFER TO NOTES ON SHEET, OR AS DIRECTED.

4 — REVISION REFERENCE.

WYE CONFIGURATION — DELTA CONFIGURATION — GROUND

TELEPHONE/DATA SYMBOLS

TEL — FLUSH TELEPHONE OUTLET BOX, WALL MOUNTED 4S/DP BOX AND 1-GANG RING WITH 3/4"C STUB TO ACCESSIBLE CEILING AND A 1" C. DOWN TO CRAWL SPACE BELOW UNLESS OTHERWISE NOTED AND PROVIDE BUSHINGS. PROVIDE ONE (1) CAT-6 UTP 4-PAIR CABLE FROM OUTLET TO TELEPHONE COMPANY DEMARCATION POINT ON EXTERIOR OF BUILDING. EXTEND TWO EXISTING DIAL TONE LINES FROM EXTERIOR DEMARCATION EQUIPMENT TO THIS OUTLET FOR OWNER'S 2-LINE TELEPHONE. REFER TO FACEPLATE DETAILS FOR MORE INFORMATION.

DATA/WAP OUTLET BOX, WALL MOUNTED, FLUSH 4S/DP BOX WITH 1-GANG RING, STUB TWO (2) 3/4" C. UP TO ACCESSIBLE CEILING. REFER TO FACEPLATE DETAILS FOR MORE INFORMATION. TERMINATE ALL WAP CABLES AT THIS LOCATION. REFER TO FACEPLATE DETAILS FOR MORE INFORMATION.

WAP — WIRELESS ACCESS POINT DATA OUTLET, FLUSH 1-GANG DP BOX WITH 3/4" C. (UON) AND ONE (1) CAT-6 UTP 4-PAIR CABLE TO DATA/WAP OUTLET IN OFFICE, OR AS SHOWN ON THE FLOOR PLANS. WHEN INSTALLED AT ACCESSIBLE CEILING TILE LOCATIONS, PROVIDE WAP OUTLET 6-12 INCHES ABOVE ACCESSIBLE CEILING TILE AND MOUNT TO THREADED ROD ATTACHED TO STRUCTURE ABOVE. REFER TO FACEPLATE DETAILS FOR ADDITIONAL INFORMATION. WAP ELECTRONICS AND ANTENNA ARE OFOI.

T1 — CONCEALED TELEPHONE/DATA CONDUIT RUN, 1-INCH CONDUIT (MIN). SEE TABLE FOR CONDUIT SIZE VARIATIONS.
T2 = 1-1/4" C. T3 = 1-1/2" C. T4 = 2" C.

FLUSH MOUNTED, LOCKABLE TERMINAL CABINET WITH TERMINAL STRIPS AS REQUIRED.

SURFACE MOUNTED, LOCKABLE TERMINAL CABINET WITH TERMINAL STRIPS AS REQUIRED.

R — EXISTING WIRELESS RECEIVER WITH CONDUCTORS. TO BE REMOVED AND PROTECTED DURING DEMOLITION PHASE, AND REINSTALLED IN CONSTRUCTION PHASE. CONTRACTOR SHALL RECONNECT DEVICE CABLING OR PROVIDE NEW CABLING AS MAY BE REQUIRED TO REESTABLISH CONNECTIVITY AND FUNCTIONALITY.

LIGHTING SYMBOLS

SITE LIGHTING FIXTURE SYMBOLS DEPICTED WITH CAPITAL LETTER(S) ADJACENT TO RESPECTIVE SYMBOL(S) INDICATE(S) LIGHT FIXTURE MOUNTING BASE DETAIL(S). SEE LIGHTING FIXTURE SCHEDULE FOR FIXTURE SYMBOL INFORMATION.

1a — LIGHTING FIXTURE CALL OUT, NUMBER(S) AND/OR UPPER CASE LETTER(S) (i.e. "1") INDICATES FIXTURE TYPE (REFER TO LIGHTING FIXTURE SCHEDULE). LOWER CASE LETTER (i.e. "a") ADJACENT TO FIXTURE TYPE INDICATES BALLAST OPTION (SEE GENERAL LIGHTING FIXTURE SCHEDULE NOTES).

J — INDICATES FINAL CONNECTION TO A LIGHTING FIXTURE, NUMBER OF CONDUCTORS AS REQUIRED.

LIGHTING CONTROL SYMBOLS

SEE THE DISTRIBUTED LIGHTING CONTROL (DLCS) SPECIFICATIONS AND SEQUENCE OF OPERATIONS (SOO) FOR MORE INFORMATION.

LOW VOLTAGE WIRING INTERCONNECTING DLCS COMPONENTS AS REQUIRED. SEE DLCS SPECIFICATIONS FOR MORE INFORMATION.

D_x — WALL MOUNTED DIMMER. SEE SINGE POLE SWITCH SYMBOL FOR RELATED SUBSCRIPTS. QUANTITY OF ADJACENT LOWER CASE LETTERS INDICATES QUANTITY OF DIMMERS REQUIRED. PROVIDE DIMMER TYPE TO MATCH INDICATED BALLAST TYPE AND CONTROL REQUIREMENTS.

O_y — WALL MOUNTED STAND ALONE OCCUPANCY SENSOR.

O_y^H — WALL MOUNTED SYSTEM-BASED OCCUPANCY SENSOR.

$O_y^{H,AV,DM,P}$ — 1-WAY DIRECTIONAL CEILING MOUNTED, SYSTEM-BASED OCCUPANCY SENSOR.

$O_y^{H,AV,DM,P}$ — 2-WAY DIRECTIONAL CEILING MOUNTED, SYSTEM-BASED OCCUPANCY SENSOR.

$O_y^{K,V}$ — LOW VOLTAGE MOMENTARY SWITCHES, WALL MOUNTED, FOR MANUAL ON/OFF SWITCHING, DIMMING, AND OVERRIDE CONTROL OF LIGHTING.

$(D)_{y+}$ — AUTOMATIC SWITCHING/STEP-DIMMING DAYLIGHTING CONTROLLER USED TO SWITCH OFF LIGHTS WHEN SUFFICIENT NATURAL LIGHT IS PRESENT. REFER TO THE DLCS SOO FOR TARGET ILLUMINATION VALUE.

$(D)_{y+}$ — AUTOMATIC CONTINUOUS DIMMING DAYLIGHTING CONTROLLER USED TO DIM LIGHTS WHEN SUFFICIENT NATURAL LIGHT IS PRESENT. REFER TO THE DLCS SOO FOR TARGET ILLUMINATION VALUE.

LIGHTING CONTROL SYMBOL SUPERSCRIPT & SUBSCRIPT KEY:

1. "y" INDICATES THAT SWITCH LEG "y" TO BE CONFIGURED PER THE SOO. ADJACENT LOWER CASE LETTERS INDICATES QUANTITY OF SWITCHLEGS TO BE CONTROLLED. EXACT CONTROL FUNCTION IS DETERMINED BY THE BALLAST/DRIVER/FIXTURE TYPE.
2. ADJACENT UPPER CASE LETTER(S) INDICATE THE FOLLOWING:
   AV INDICATES CONNECTION TO A/V CONTROL SYSTEM.
   DM INDICATES DUAL MODE CONTROL AT CORRIDORS, STAIRWELLS AND WAREHOUSE AISLEWAYS
   H INDICATES CONNECTION TO HVAC SYSTEM CONTROLS VIA CONTROLLED DRY-CONTACT CLOSURE.
   K INDICATES LOCKING SWITCH FOR THE SUBSEQUENT LOWER CASE LETTER.
   P INDICATES CONNECTION TO MOVEABLE PARTITION INTERFACE, SENSOR AND STATUS INDICATOR.
   V INDICATES VANDAL RESISTANT SWITCH.
3. ADJACENT LOWER CASE LETTER(S) INDICATE SWITCH LEG(S) CONTROLLED EXCEPT WHERE "DM" INDICATES DUAL MODE CONTROL SWITCH.
4. ADJACENT "+, ++ AND ** INDICATES PORTION OF SWITCHLEG CONTROLLED BY SENSOR WHERE "+" INDICATES PRIMARY SIDELIT DAYLIT ZONE, "++" INDICATES SECONDARY SIDELIT DAYLIT ZONE, "**" INDICATES SKYLIT DAYLIT ZONE.

MISCELLANEOUS SYSTEM SYMBOLS

ICP — INVERTER CONTROL PANEL - SEE INVERTER SPECIFICATIONS.

IAP — INVERTER ANNUNCIATOR PANEL - SEE INVERTER SPECIFICATIONS.

GAP — GENERATOR ANNUNCIATOR PANEL - SEE GENERATOR SYSTEM SPECIFICATIONS FOR MORE INFORMATION.

IDCS — INTEGRATED DIMMING CONTROL STATION (IDCS) PANEL - WALL MOUNTED. SEE IDCS SYSTEM SPECIFICATIONS FOR MORE INFORMATION.

DPCS — DIMMING PANEL CONTROL STATION (DPCS) PANEL - WALL MOUNTED. SEE DPCS SYSTEM SPECIFICATIONS FOR MORE INFORMATION.

L — LIGHTING CONTROL SYSTEM LOCAL SWITCH - WALL MOUNTED. SEE LIGHTING CONTROL SYSTEM SPECIFICATIONS FOR MORE INFORMATION.

O — LIGHTING CONTROL SYSTEM OVERRIDE SWITCH - WALL MOUNTED. SEE LIGHTING CONTROL SYSTEM SPECIFICATIONS FOR MORE INFORMATION.

M — LIGHTING CONTROL SYSTEM MASTER SWITCH - WALL MOUNTED. SEE LIGHTING CONTROL SYSTEM SPECIFICATIONS FOR MORE INFORMATION.

R — IDCS/DPCS SYSTEM REMOTE STATION SWITCH - WALL MOUNTED. SEE IDCS SYSTEM AND/OR DPCS SYSTEM SPECIFICATIONS FOR MORE INFORMATION.

P — IDCS/DPCS SYSTEM PARTITION STATION SWITCH - WALL MOUNTED. SEE IDCS SYSTEM AND/OR DPCS SYSTEM SPECIFICATIONS FOR MORE INFORMATION.

BRANCH CIRCUIT SYMBOLS

A-1,3,5 — HOME RUN TO PANEL. LETTER DESIGNATES PANEL, NUMBERS INDICATE CIRCUITS. HASH MARKS INDICATE NUMBER OF CONDUCTORS IN CONDUIT RUN, #12 AWG MINIMUM UNLESS OTHERWISE NOTED.

A-1&3&5 — HOME RUN TO PANEL. LETTER DESIGNATES PANEL, NUMBERS INDICATE CIRCUITS WITH SEPARATE NEUTRALS. "&" INDICATES SEPARATE NEUTRALS.

A-1+3+5 — HOME RUN TO PANEL. LETTER DESIGNATES PANEL, NUMBERS INDICATE CIRCUITS. "+" INDICATES SEPARATE #10 NEUTRAL THROUGHOUT BRANCH CIRCUIT. HASH MARK "g" INDICATES AN ISOLATED GROUND CONDUCTOR.

CONCEALED CONDUIT OR BRANCH CIRCUIT UNLESS OTHERWISE NOTED. 1/2" CONDUIT MINIMUM, (2) #12 AWG CONDUCTORS MINIMUM.

CONDUIT OR BRANCH CIRCUIT CONCEALED BELOW GRADE, 3/4" CONDUIT MINIMUM WITH (2) 12 AWG CONDUCTORS MINIMUM AND A CODE SIZED EQUIPMENT GROUND.

SURFACE-MOUNTED CONDUIT OR BRANCH CIRCUIT UNLESS OTHERWISE NOTED. 1/2" CONDUIT MINIMUM, (2) #12 AWG CONDUCTORS MINIMUM.

TANDEM WIRING CONNECTION.

CONDUIT STUB OUT, CAP, MARK AND RECORD ON AS-BUILT DRAWINGS

CONDUIT CONTINUATION.

FLEXIBLE CONNECTION AS REQUIRED. NUMBER OF CONDUCTORS AS REQUIRED. VERIFY CONNECTION REQUIREMENTS WITH MANUFACTURER PRIOR TO ROUGH-IN.

CONDUIT/ BRANCH CIRCUIT/FEEDER CONTINUATION DOWN WALL TO FLOOR BELOW

CONDUIT/ BRANCH CIRCUIT/FEEDER CONTINUATION UP WALL TO FLOOR ABOVE

FLOOR BOX / SPECIALTY WALL BOX / PEDESTAL BOX SYMBOLS

ON-GRADE FLOOR BOX. PROVIDE DEVICES PER PLAN. SEE FLOOR BOX SCHEDULE, DETAILS AND SPECIFICATIONS FOR MORE INFORMATION.

ABOVE GRADE POKE-THRU DEVICE. PROVIDE DEVICES PER PLAN. SEE FLOOR BOX SCHEDULE, DETAILS AND SPECIFICATIONS FOR MORE INFORMATION.

RECESSED, ADJUSTABLE DEPTH, FLAT PANEL TV/DISPLAY WALL BOX WITH FLUSH GROMMETED COVER PANEL (CHIEF #PAC525F) AND MINIMUM OF (1) 1-1/4"C.O. FROM TOP-MOUNTED L.V. CONDUIT ENTRY BOX TO ACCESSIBLE CEILING. SEE PLANS FOR ANY ADDITIONAL CONDUIT REQUIREMENTS. PROVIDE ADDITIONAL L.V. AND LINE VOLTAGE CONDUIT ENTRY BOXES AS REQUIRED TO ACCOMPLISH WALL BOX CONFIGURATION DEPICTED ON PLANS. FLUSH GROMMETED COVER SHALL BE WHITE, BLACK OR CUSTOM COLOR PER ARCHITECT. WHEN FIELD CONDITIONS PROHIBIT INSTALLATION OF THIS DEVICE (SUCH AS WALL STUD/CAVITY DEPTH OF LESS THAN 2.5" ETC), CONFIRM VIA WRITTEN RFI THE INSTALLATION OF A TRADITIONAL POWER AND DATA RECEPTACLE INSTALLATION ALONG SIDE CCTV/AV JUNCTION BOX CONSISTING OF 2-GANG DEEP JUNCTION BOX/2-GANG RING WITH 1-1/4"C.O. TO ACCESSIBLE CEILING IN ADDITION TO ANY OTHER CONDUIT REQUIREMENTS DEPICTED ON PLANS. REFER TO ARCHITECTURAL PLANS AND ELEVATIONS FOR MOUNTING HEIGHT.

SINGLE OR DUAL SERVICE RECESSED EXTERIOR WALL BOX.- TYPE "WP-A". PROVIDE DEVICES PER PLAN. EACH LV OR UNUSED COMPARTMENT SHALL BE EQUIPPED WITH A 1"C.O. TO THE NEAREST ACCESSIBLE CEILING SPACE U.O.N. SEE EXTERIOR DETAILS AND SPECIFICATIONS FOR MORE INFORMATION.

SINGLE OR DUAL SERVICE EXTERIOR PEDESTAL - TYPE "WP-C". PROVIDE DEVICES PER PLAN. SEE EXTERIOR DETAILS AND SPECIFICATIONS FOR MORE INFORMATION. ARROW DENOTES DEVICE DOOR LOCATION.

POWER SYMBOLS

ALL RECEPTACLE OUTLETS SHOWN WITH A DIAGONAL SLASH SHALL BE CONTROLLED BY OCCUPANCY SENSOR OR LIGHTING CONTROL PANEL. SEE DISTRIBUTED LIGHTING CONTROLS FOR ADDITIONAL REQUIREMENTS. WHERE DOUBLE DUPLEX RECEPTACLE OUTLETS ARE INDICATED AS CONTROLLED, ONLY A SINGLE DUPLEX RECEPTACLE OUTLET (NON-IG, NON-GCFI TYPE) SHALL BE CONTROLLED. WITHIN ANY CONTROLLED DUPLEX RECEPTACLE OUTLET, ONLY ONE RECEPTACLE SHALL BE CONTROLLED. NOTE THAT FOR FLOOR BOXES OR POKE-THRU DEVICES, THE ASSOCIATED CONTROL RELAY MAY NEED TO BE LOCATED WITHIN THE ELECTRICAL ROOM WHERE THE CONTROLLED CIRCUIT ORIGINATES.

$(W)_a$ — OCCUPANCY SENSOR/LIGHTING CONTROL SYSTEM CONTROLLED RECEPTACLE RELAY. WHERE LETTER DESIGNATION "a" REPRESENTS OCCUPANCY SENSOR/LIGHTING CONTROL SYSTEM CONTROL ZONE. SEE THE DISTRIBUTED LIGHTING CONTROL SPECIFICATION FOR MORE INFORMATION.

DUPLEX RECEPTACLE, WALL MOUNTED.

DOUBLE DUPLEX RECEPTACLE, WALL MOUNTED.

DUPLEX, GFCI RECEPTACLE, WALL MOUNTED. WP INDICATES WEATHERPROOF, A, B OR C INDICATES THE TYPE OF COVER, REFER TO THE GENERAL PRODUCT SPECIFICATIONS.

DOUBLE DUPLEX, WALL MOUNTED, WITH (1) GFCI RECEPTACLE AND (1) DUPLEX RECEPTACLE CONNECTED ON LOAD SIDE OF GFCI. WP INDICATES WEATHERPROOF, A, B OR C INDICATES THE TYPE OF COVER, REFER TO THE GENERAL PRODUCT SPECIFICATIONS.

DUPLEX RECEPTACLE, ONE HALF SWITCHED, WALL MOUNTED.

DUPLEX, ISOLATED GROUND RECEPTACLE, WALL MOUNTED.

1,3 1,3a — COMBINATION DOUBLE DUPLEX: ONE ISOLATED GROUND DUPLEX RECEPTACLE AND ONE DUPLEX RECEPTACLE, WALL MOUNTED.

COMBINATION DOUBLE DUPLEX: TWO ISOLATED GROUND RECEPTACLES, WALL MOUNTED.

SIMPLEX RECEPTACLE, WALL MOUNTED.

SPECIAL RECEPTACLE, WALL MOUNTED. REFER TO PLAN NOTES.

DUPLEX RECEPTACLE FLUSH IN CEILING - MOUNT FLUSH IN FLOOR WHEN INDICATED IN A FLOOR BOX SYMBOL.

DOUBLE DUPLEX RECEPTACLE FLUSH IN CEILING - MOUNT FLUSH IN FLOOR WHEN INDICATED IN A FLOOR BOX SYMBOL.

DUPLEX RECEPTACLE, ONE HALF SWITCHED, FLUSH IN CEILING - MOUNT FLUSH IN FLOOR WHEN INDICATED IN A FLOOR BOX SYMBOL.

DUPLEX, ISOLATED GROUND RECEPTACLE, FLUSH IN CEILING - MOUNT FLUSH IN FLOOR WHEN INDICATED IN A FLOOR BOX SYMBOL.

1,3 1,3a — COMBINATION DOUBLE DUPLEX: ONE ISOLATED GROUND DUPLEX RECEPTACLE AND ONE DUPLEX RECEPTACLE, MOUNTED FLUSH IN CEILING - MOUNT FLUSH IN FLOOR WHEN INDICATED IN FLOOR BOX SYMBOL.

COMBINATION DOUBLE DUPLEX FLUSH IN CEILING: TWO ISOLATED GROUND RECEPTACLES - MOUNT FLUSH IN FLOOR WHEN INDICATED IN FLOOR BOX SYMBOL.

SIMPLEX RECEPTACLE FLUSH IN CEILING - MOUNT FLUSH IN FLOOR WHEN INDICATED IN A FLOOR BOX SYMBOL.

SPECIAL RECEPTACLE FLUSH IN CEILING - MOUNT FLUSH IN FLOOR WHEN INDICATED IN A FLOOR BOX SYMBOL.

DUPLEX RECEPTACLE, WALL MOUNTED AT 6-INCHES ABOVE COUNTER OR SPLASH.

DOUBLE DUPLEX RECEPTACLE, WALL MOUNTED AT 6-INCHES ABOVE COUNTER OR SPLASH.

DUPLEX, GFCI RECEPTACLE, WALL MOUNTED AT 6-INCHES ABOVE COUNTER OR SPLASH. WP INDICATES WEATHERPROOF, A, B OR C INDICATES THE TYPE OF COVER, REFER TO THE GENERAL PRODUCT SPECIFICATIONS.

DOUBLE DUPLEX, WALL MOUNTED 6-INCHES ABOVE COUNTER OR SPLASH, WITH (1) GFCI RECEPTACLE AND (1) DUPLEX RECEPTACLE CONNECTED ON LOAD SIDE OF GFCI. WP INDICATES WEATHERPROOF, A, B OR C INDICATES THE TYPE OF COVER, REFER TO THE GENERAL PRODUCT SPECIFICATIONS.

DUPLEX RECEPTACLE, BOTTOM HALF SWITCHED, WALL MOUNTED AT 6-INCHES ABOVE COUNTER OR SPLASH.

DUPLEX, ISOLATED GROUND RECEPTACLE, WALL MOUNTED AT 6-INCHES ABOVE COUNTER OR SPLASH.

1,3 1,3a — COMBINATION DOUBLE DUPLEX: ONE ISOLATED GROUND DUPLEX RECEPTACLE AND ONE DUPLEX RECEPTACLE, WALL MOUNTED AT 6-INCHES ABOVE COUNTER OR SPLASH.

COMBINATION DOUBLE DUPLEX: TWO ISOLATED GROUND DUPLEX RECEPTACLES, WALL MOUNTED AT 6-INCHES ABOVE COUNTER OR SPLASH.

SIMPLEX RECEPTACLE, WALL MOUNTED AT 6-INCHES ABOVE COUNTER OR SPLASH.

SPECIAL RECEPTACLE, WALL MOUNTED AT 6-INCHES ABOVE COUNTER OR SPLASH. REFER TO PLAN NOTES.

WP-B — WET LOCATION-LISTED (RAINTITE-IN-USE) RECEPTACLE - SEE ELECTRICAL SPECIFICATION FOR ADDITIONAL INFORMATION.

WP-D — DAMP LOCATION-LISTED (NOT-RAINTITE-IN-USE) RECEPTACLE - SEE ELECTRICAL SPECIFICATION FOR ADDITIONAL INFORMATION.

DUPLEX RECEPTACLES WITH TWO 5V, 3.6A USB CHARGING PORTS. PROVIDE COLOR AS REQUIRED IN 15A OR 20A CONFIGURATION AND/OR TAMPER RESISTANT AND/OR HOSPITAL GRADE AS REQUIRED BY PLANS AND THE WIRING DEVICES SECTION OF THE GENERAL ELECTRICAL SPECIFICATIONS. (PASS & SEYMOUR OR EQUAL BY HUBBELL OR LEVITON.)

QUAD RECEPTACLES WITH TWO 5V, 3.6A USB CHARGING PORTS. PROVIDE COLOR AS REQUIRED IN 15A OR 20A CONFIGURATION AND/OR TAMPER RESISTANT AND/OR HOSPITAL GRADE AS REQUIRED BY PLANS AND THE WIRING DEVICES SECTION OF THE GENERAL ELECTRICAL SPECIFICATIONS. (PASS & SEYMOUR OR EQUAL BY HUBBELL OR LEVITON.)

J — JUNCTION BOX, WALL MOUNTED AT +18-INCHES A.F.F. OR AS NOTED. 4S/DP MINIMUM OR AS REQUIRED BY N.E.C. OR CEC, WHERE ADOPTED.

J — JUNCTION BOX, MOUNTED IN ACCESSIBLE CEILING FOR APPLICATION DENOTED ON PLAN. 4S/DP MINIMUM OR AS REQUIRED BY N.E.C. OR CEC, WHERE ADOPTED.

J — JUNCTION BOX, WALL MOUNTED AT 6-INCHES ABOVE COUNTER OR SPLASH. 4S/DP MINIMUM OR AS REQUIRED BY N.E.C., OR CEC, WHERE ADOPTED.

J — JUNCTION BOX, 4S MINIMUM OR AS REQUIRED BY N.E.C., OR CEC, WHERE ADOPTED. MOUNTED IN ACCESSIBLE CEILING SPACE PER PLAN FOR FLEXIBLE CONNECTION TO PRE-WIRED FURNITURE SYSTEM. MOUNT FLUSH IN FLOOR WHEN INDICATED IN A FLOOR BOX SYMBOL. WHEN SHOWN WITH A DIAGONAL SLASH, THE LAST GENERAL RECEPTACLE CIRCUIT ON THE HOME-RUN CALL OUT SHALL BE CONTROLLED BY THE OCCUPANCY SENSOR. COORDINATE CONTROLLED CIRCUIT CONNECTION REQUIREMENTS WITH FURNITURE SYSTEM MANUFACTURER PRIOR TO ROUGH-IN. SEE DISTRIBUTED LIGHTING CONTROLS FOR ADDITIONAL REQUIREMENTS.

J — JUNCTION BOX, WALL MOUNTED AT +18-INCHES A.F.F., 4S/DP MINIMUM OR AS REQUIRED BY N.E.C., OR CEC, WHERE ADOPTED, FOR FLEXIBLE CONNECTION TO PREWIRED FURNITURE SYSTEM. WHEN SHOWN WITH A DIAGONAL SLASH, THE LAST GENERAL RECEPTACLE CIRCUIT ON THE HOME-RUN CALLOUT SHALL BE CONTROLLED BY THE OCCUPANCY SENSOR. COORDINATE CONTROLLED CIRCUIT CONNECTION REQUIREMENTS WITH FURNITURE SYSTEM MANUFACTURER PRIOR TO ROUGH-IN. SEE DISTRIBUTED LIGHTING CONTROLS FOR ADDITIONAL REQUIREMENTS.

SURFACE MOUNTED MULTI-OUTLET ASSEMBLY. REFER TO GENERAL PRODUCT SPECIFICATIONS. PROVIDE ALL COMPONENTS NECESSARY FOR A COMPLETE INSTALLATION.

T — THERMOSTAT OUTLET BOX, PROVIDE 1/2" C.O. TO RESPECTIVE MECHANICAL UNIT.

EXHAUST FAN, OR MOTOR LOAD. REFER TO MECHANICAL, PLUMBING OR KITCHEN DRAWINGS FOR SPECIFIC LOAD REQUIREMENTS OR AS NOTED.

FLUSH MOUNTED ELECTRICAL PANELBOARD OR LOAD CENTER. REFER TO PANEL SCHEDULE.

SURFACE MOUNTED ELECTRICAL PANELBOARD OR LOAD CENTER. REFER TO PANEL SCHEDULE.

DISTRIBUTION SWITCHBOARD. REFER TO SINGLE LINE DIAGRAM.

T — TRANSFORMER, REFER TO SINGLE LINE DIAGRAM.

F — FUSED DISCONNECT SWITCH, HP RATED, OR COMBINATION MOTOR STARTER/DISCONNECT SWITCH WITH FUSES PER EQUIPMENT MANUFACTURER AND WEATHERPROOF AS REQUIRED. PROVIDE FINAL CONNECTION TO UNIT EQUIPMENT. SEE MOTORIZED EQUIPMENT SCHEDULE FOR DISCONNECT AND STARTER SIZES.

NON-FUSED DISCONNECT SWITCH, HP RATED AND WEATHERPROOF AS REQUIRED. PROVIDE FINAL CONNECTION TO UNIT EQUIPMENT. SEE MOTORIZED EQUIPMENT SCHEDULE FOR DISCONNECT SIZES.

M — UTILITY COMPANY METER. PROVIDE "CTs" AND "PTs" AS REQUIRED, REFER TO SINGLE LINE DIAGRAM.

A B C — CIRCUIT BREAKER: "A" REPRESENTS CIRCUIT BREAKER AMPERE RATING, "B" REPRESENTS NUMBER OF POLES AND "C" REPRESENTS MISCELLANEOUS BREAKER FEATURES.
SHUNT= PROVIDE SHUNT TRIP MECHANISM
GFP= GROUND FAULT PROTECTION
CLCB= CURRENT LIMITING CIRCUIT BREAKER
SS= PROVIDE SOLID STATE CIRCUIT BREAKER
LO= PROVIDE PERMANENT LOCK-OPEN (OFF) HARDWARE
LC= PROVIDE PERMANENT LOCK-CLOSED (ON) HARDWARE

A B C D — FUSIBLE SWITCH: "A" REPRESENTS SWITCH/FRAME AMPERE RATING, "B" REPRESENTS THE FUSE AMPERE RATING, "C" INDICATES NUMBER OF POLES AND "D" REPRESENTS MISCELLANEOUS FUSE/SWITCH FEATURES.
SHUNT= PROVIDE SHUNT TRIP MECHANISM
GFP= GROUND FAULT PROTECTION
CLF= CURRENT LIMITING FUSE

GROUND CONNECTION, SIZE AS INDICATED OR AS REQUIRED.

§a,b — SINGLE POLE SWITCHES, WALL MOUNTED. SUBSCRIPTS

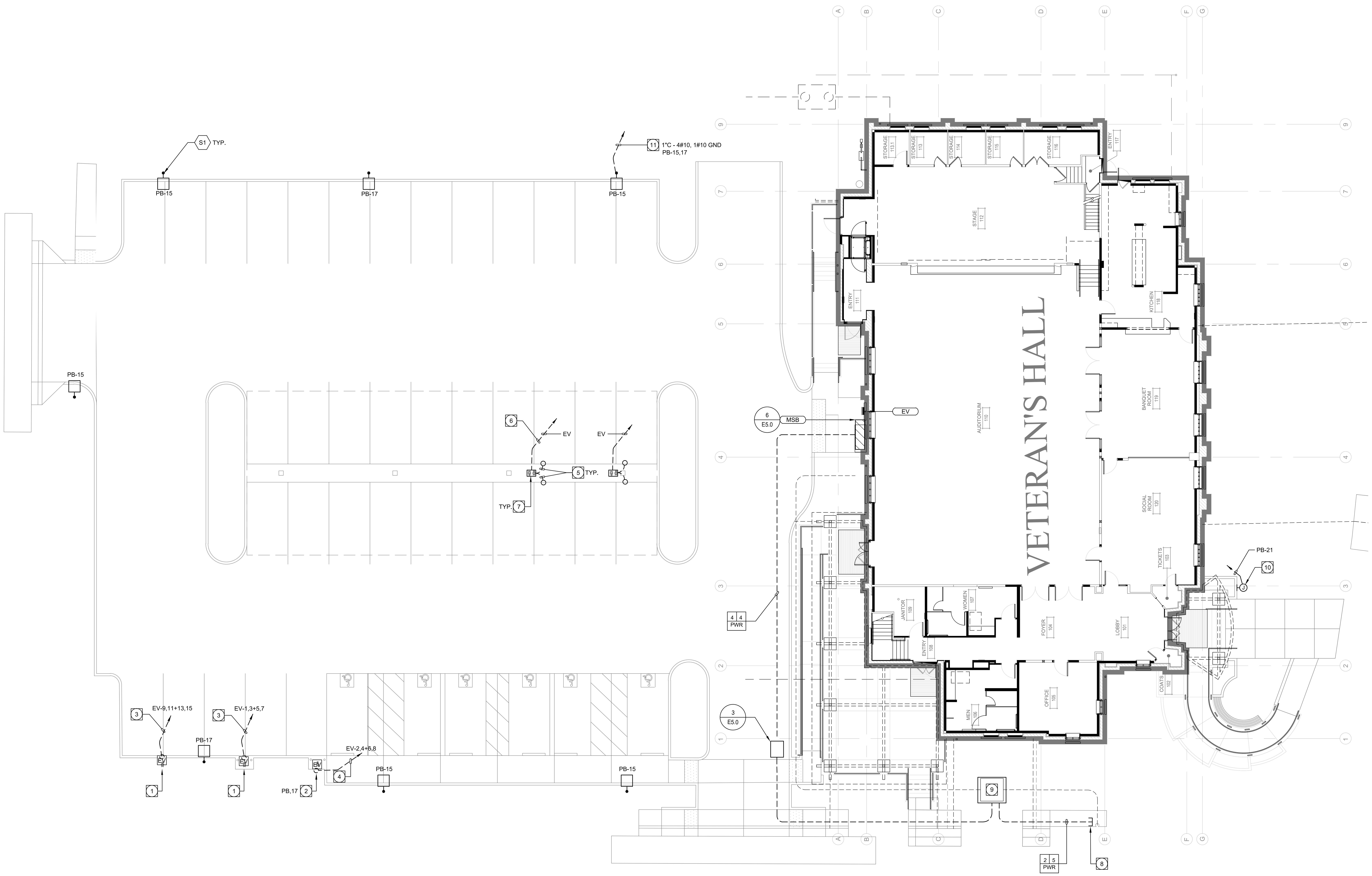

SITE ELECTRICAL PLAN

NORTH

SCALE: 1" = 10'-0"

LEGEND OF CONDUIT SYMBOLS

NO. OF CONDUIT REQUIRED — SIZE OF CONDUIT

PWR = UTILITY COMPANY POWER CONDUIT SYMBOL.

SITE UTILITY PLAN NOTES:

1. UTILITY POINTS OF SERVICE AND WORK/MATERIAL SHOWN ARE BASED UPON PRELIMINARY INFORMATION ONLY BY THE UTILITY COMPANIES AND ARE FOR BID PURPOSES ONLY.
2. CONTRACTOR SHALL COORDINATE WITH UTILITY COMPANY FOR FINAL AND EXACT WORK/MATERIAL REQUIREMENTS AND CONSTRUCT TO UTILITY COMPANY ENGINEERING PLANS AND SPECIFICATIONS ONLY. CONTRACTOR SHALL FURNISH AND INSTALL ALL CONDUIT, PULL WIRES, CABLES, PULLBOXES, CONCRETE ENCASEMENT OF CONDUITS, TRANSFORMER PAD, BARRIERS, POLE RISERS, TRENCHING AND BACKFILL, AND PAY ALL UTILITY CO. FEES AND INCLUDE ALL REQUIREMENTS IN SCOPE OF WORK.
3. LOCATIONS OF UTILITIES SHOWN ARE APPROXIMATE AND CONTRACTOR SHALL EXERCISE EXTREME CAUTION IN EXCAVATING AND TRENCHING ON THIS SITE TO AVOID EXISTING DUCTS, PIPING, OR CONDUITS, ETC., AND TO PREVENT HAZARD TO PERSONNEL AND/OR DAMAGE TO EXISTING UNDERGROUND UTILITIES OR STRUCTURES WHETHER OR NOT SHOWN AND INSTALLED BY ANY OTHER CONTRACTS. THE ENGINEER IS NOT RESPONSIBLE FOR THE LOCATION OF UNDERGROUND UTILITIES OR STRUCTURES WHETHER OR NOT SHOWN OR DETAILED AND INSTALLED BY ANY OTHER CONTRACTS. THE CONTRACTOR SHALL IMMEDIATELY NOTIFY THE ENGINEER SHOULD SUCH UNIDENTIFIED CONDITIONS BE DISCOVERED. THESE DRAWINGS AND SPECIFICATIONS DO NOT INCLUDE THE NECESSARY ELEMENTS FOR CONSTRUCTION SAFETY.
4. UNLESS SPECIFICALLY SHOWN AS (E), (R), (ER), (D), EXISTING OR NON-BOLD, ALL ELECTRICAL DEVICES SHOWN ARE NEW.
5. UTILITY CONTACTS:

   POWER:
   PG&E
   -
   -
   -
   -

PLAN NOTES:

1. EV DUAL PORT/DUAL CIRCUIT CHARGING STATION TO BE CONTRACTOR PROVIDED, CONTRACTOR INSTALLED. CONNECT COMPLETE TO EV CHARGING STATION AS REQUIRED. COORDINATE ALL REQUIREMENTS WITH EV CHARGER STATION SUPPLIER PRIOR TO ROUGH-IN. STUB UP CONDUIT AT EV CHARGING STATION(S) AS REQUIRED, VERIFY EXACT LOCATION IN FIELD PRIOR TO ROUGH-IN. CHARGEPOINT #CT4021
2. EV SINGLE PORT CHARGING STATION TO BE CONTRACTOR PROVIDED, CONTRACTOR INSTALLED. CONNECT COMPLETE TO EV CHARGING STATION AS REQUIRED. COORDINATE ALL REQUIREMENTS WITH EV CHARGER STATION SUPPLIER PRIOR TO ROUGH-IN. STUB UP CONDUIT AT EV CHARGING STATION(S) AS REQUIRED, VERIFY EXACT LOCATION IN FIELD PRIOR TO ROUGH-IN. CHARGEPOINT #CT4011
3. PROVIDE 1"C. 4#8, 1#8 GRD.
4. PROVIDE 1"C. 2#8, 1#8 GRD.
5. 1"C.O. PVC TO FUTURE EV DUAL PORT CHARGING STATION. STUB, CAP AND MARK FOR FUTURE AS REQUIRED. VERIFY EXACT MOUNTING LOCATION PRIOR TO ROUGH-IN.
6. 1-1/4"C.O. PVC TO PANEL FUTURE EV DUAL PORT CHARGING STATION BRANCH CIRCUITING.
7. 11"x17" PULL BOX WITH BOLT-ON LID. PROVIDE PULL BOX WITH LOCKABLE COVER. COVER SHALL BE LABELED "ELECTRICAL". MOUNT PULL BOX FLUSH WITH FINISH GRADE, VERIFY EXACT REQUIREMENTS IN FIELD. VERIFY EXACT MOUNTING LOCATION IN FIELD PRIOR TO ROUGH-IN.
8. VERIFY UTILITY CONNECTION POINT WITH SERVING UTILITY.
9. 6'X8' UTILITY TRANSFORMER PAD. PROVIDE PER SERVING UTILITY REQUIREMENTS.
10. RECONNECT AS REQUIRED TO EXISTING BUILDING SIGNAGE.
11. PROVIDE RELAY AS REQUIRED FOR CONTROL OF EXTERIOR LIGHTING BY PHOTOCELL ON / TIMECLOCK OFF. MOUNT RELAY IN SEPARATE BARRIERED COMPARTMENT OF PANELBOARD.

SITE PLAN GENERAL NOTES:

1. CONTRACTOR SHALL EXERCISE EXTREME CAUTION IN EXCAVATING AND TRENCHING ON THIS SITE TO AVOID EXISTING DUCTS, PIPING OR CONDUITS, ETC., AND TO PREVENT HAZARDS TO PERSONNEL AND/OR DAMAGE TO EXISTING UNDERGROUND UTILITIES OR STRUCTURES WHETHER OR NOT SHOWN AND INSTALLED BY ANY OTHER CONTRACTS. THE ENGINEER IS NOT RESPONSIBLE FOR THE LOCATION OF UNDERGROUND UTILITIES OR STRUCTURES WHETHER OR NOT SHOWN OR DETAILED AND INSTALLED BY ANY OTHER CONTRACTS. THE CONTRACTOR SHALL IMMEDIATELY NOTIFY THE ENGINEER SHOULD SUCH UNIDENTIFIED CONDITIONS BE DISCOVERED. THESE DRAWINGS AND SPECIFICATIONS DO NOT INCLUDE THE NECESSARY ELEMENTS FOR CONSTRUCTION SAFETY.
2. CALL UNDERGROUND SERVICE ALERT (USA) AT 1 (800) 422-4133 OR APPLICABLE STATE AND LOCAL DIG SAFE OR UNDERGROUND ALERT HOTLINES PRIOR TO CONSTRUCTION START.
3. MINIMUM CONDUIT SIZE SHALL BE 3/4" - U.O.N.
4. MINIMUM CONDUCTOR SIZE SHALL BE #10 AWG. - U.O.N.
5. ALL SITE BRANCH CIRCUITS SHALL INCLUDE AN EQUIPMENT GROUND CONDUCTOR THAT, AT MINIMUM, MATCHES THE SIZE OF THE ASSOCIATED BRANCH CIRCUIT CONDUCTOR. WHERE MULTIPLE BRANCH CIRCUITS ARE ROUTED/GROUPED TOGETHER, THE EQUIPMENT GROUNDING CONDUCTOR SHALL MATCH THE SIZE OF THE LARGEST BRANCH CIRCUIT CONDUCTOR IN THE GROUP.
6. ALL ELECTRICAL EQUIPMENT MOUNTED OUTDOORS SHALL BE WEATHERPROOF (NEMA #3R).
7. ALL CONDUIT ONLY SHALL BE PROVIDED WITH A NYLON PULL STRING.
8. SEE ARCHITECTURAL/LANDSCAPE ARCHITECTURAL PLANS FOR EXACT LOCATIONS OF FIXTURES, PULLBOXES, MANHOLES, OTHER ELECTRICAL DEVICES, ETC. COORDINATE ALL UNDERGROUND STRUCTURES AND CONDUIT ROUTING WITH LANDSCAPE ARCHITECT PRIOR TO ROUGH-IN TO ENSURE THAT SUCH ITEMS ARE NOT PLACED IN CRITICAL LANDSCAPE PLANTING/HARDSCAPE AREAS.
9. UNLESS SPECIFICALLY SHOWN AS (E), (R), (ER), (D), EXISTING OR NON-BOLD, ALL ELECTRICAL DEVICES SHOWN ARE NEW.

SITE UTILITY PLAN CONSTRUCTION NOTES:

THESE NOTES ESTABLISH MINIMUM QUALITY LEVELS AND COORDINATION REQUIREMENTS. RESPECTIVE UTILITY COMPANY PLANS AND REQUIREMENTS TAKE PRECEDENCE OVER THESE NOTES WITH REGARD TO RESPECTIVE UTILITY COMPANY CONDUIT AND UNDERGROUND STRUCTURE SYSTEMS.

1. CALL UNDERGROUND SERVICE ALERT (USA) AT (800) 422-4133 OR APPLICABLE STATE AND LOCAL DIG SAFE OR UNDERGROUND ALERT HOTLINES PRIOR TO CONSTRUCTION START.
2. COORDINATE ALL UNDERGROUND STRUCTURES AND CONDUIT ROUTING WITH LANDSCAPE ARCHITECT PRIOR TO ROUGH-IN TO ENSURE THAT SUCH ITEMS ARE NOT PLACED IN CRITICAL LANDSCAPE PLANTING/HARDSCAPE AREAS.
3. VAULTS, MAINTENANCE HOLES (MH's), FORMERLY KNOWN AS MANHOLES, AND CONDUITS SHALL MAINTAIN A MINIMUM COVER OF 24" BELOW FINAL SURFACE AT ALL CONDITIONS. INCLUDE ALL COSTS IN BASE BID TO MEET UTILITY COMPANY REQUIREMENTS WHICH MAY REQUIRE GREATER MINIMUM CONDUIT DEPTHS.
4. VAULTS, MH's AND PULLBOXES (PB's) SHALL BE EQUIPPED WITH KNOCKOUT PANELS OR PRE-CAST INDIVIDUAL CONDUIT OPENINGS. CONDUITS SHALL ONLY ENTER AND EXIT ON END/SHORT WALLS. CONDUITS MAY NOT ENTER AND EXIT ON SIDE/LONG WALLS, CEILINGS OR FLOORS UNLESS OTHERWISE NOTED.
5. CUT DUCTS FLUSH WITH INTERIOR VAULT/MH/PB WALL.
6. GROUT AROUND DUCT ENTRANCES ON VAULT/MH/PB WALLS.
7. SLURRY BACKFILL AROUND DUCTS WITHIN 5 FEET OF VAULT/MH/PB TO PREVENT SHEARING.
8. CONDUITS PASSING UNDER THE BUILDING PERIMETER SHALL BE ENCASED IN LIGHTWEIGHT CONCRETE OR WATER-IMPERVIOUS CLAY TO PREVENT WATER INFILTRATION. SEE ELECTRICAL SPECIFICATIONS FOR ADDITIONAL INFORMATION.
9. CONDUIT BEND RADIUS FOR BUILDING ENTRANCES AND AT POLES SHALL BE A MINIMUM OF 24" FOR CONDUITS WITH LESS THAN 2" INTERNAL DIAMETER AND A MINIMUM OF 48" FOR CONDUITS WITH MORE THAN 2" INTERNAL DIAMETER.
10. PREFERRED CONDUIT SWEEP RADIUS BETWEEN VAULTS IS 25 FEET. UNDER NO CIRCUMSTANCES SHALL THE CONDUIT SWEEP RADIUS BE LESS THAN 12.5 FEET. MAXIMUM OF 90 DEGREES PER SWEEP AND LIMITED TO NO MORE THAN (2) 90 DEGREE SWEEPS BETWEEN VAULTS.
11. VAULTS/MH's/PB's ARE TO BE EQUIPPED WITH RACKING, GROUNDING LUGS, AND BOLT-DOWN LIDS UNLESS OTHERWISE NOTED.
12. VAULTS AND MH's TO BE EQUIPPED WITH ROUND COVERS, EXTENSION RINGS AS REQUIRED, LADDERS AND (3) SEGMENTS OF 6 FOOT HIGH CABLE RACKING PER EACH LONG WALL.
13. LABEL ALL NON-UTILITY COMMUNICATION VAULT/MH/PB COVERS WITH "COMMUNICATIONS" UNLESS OTHERWISE NOTED ON PLANS.
14. COORDINATE FINAL VAULT/MH/PB OPENING HEIGHT WITH G.C. PRIOR TO ROUGH-IN TO ENSURE FINAL GRADE DOES NOT SLOPE INTO VAULT/MH/PB OPENING.
15. CONTRACTOR TO PROVIDE A MINIMUM OF 8" DEEP COMPACTED 1/2" DIAMETER GRAVEL, UNDER ALL VAULTS, MH's OR PB's TO ENSURE UNIFORM DISTRIBUTION OF SOIL PRESSURE ON THE FLOOR AND BE ABLE TO DISSIPATE WATER OUT OF THE VAULT, MH OR PB.
16. ALL VAULTS/MH's/PB's WITHOUT GROUNDING LUGS SHALL HAVE AN 8' x 3/4" COPPER GROUND ROD DRIVEN THRU THE FLOOR TO ALLOW GROUNDING OF ITEMS WITHIN.
17. ALL VAULTS/MH's/PB's SHALL BE PROVIDED WITH TRAFFIC RATED COVERS WHEN LOCATED IN PAVED AREAS UTILIZED FOR VEHICLE TRAFFIC.
18. IF THE WATER OR MOISTURE BARRIER ON OR NEAR THE FOUNDATION OF A BUILDING IS DISTURBED IN ANY MANNER BY EXCAVATION OR OTHER CONSTRUCTION WORK, THE MOISTURE BARRIER MUST BE REPAIRED FOLLOWING THE RECOMMENDATIONS OF THE MANUFACTURER OF THE ORIGINAL BARRIER PRODUCT.
19. THE CONTRACTOR SHALL INCLUDE IN BASE BID ALL COSTS TO COMPLY WITH ALL REQUIREMENTS FOR CONFINED SPACE ENTRY PER THE OSHA REQUIREMENTS 29 CFR-1910.146, 29 CFR-1910.268, ETC. DURING ANY CONFINED SPACE ENTRY.
20. ANY DUCTS LEAVING A VAULT, MH OR PB ROUTED INTO A FACILITY SHALL BE PLUGGED AT EACH END USING REMOVABLE MECHANICAL PLUGS DESIGNED TO PREVENT WATER AND GAS FROM ENTERING THE FACILITY.
21. SEE ELECTRICAL SPECIFICATIONS AND PLAN DETAILS FOR ADDITIONAL REQUIREMENTS REGARDING UNDERGROUND CONDUITS AND IN-GRADE VAULT/MH/PB/JUNCTION BOXES.

Copyright © 2025

All ideas, designs, arrangements and plans indicated or represented by this drawing are owned by, and the property of, NICHOLS, MELBURG and ROSSETTO and were created, evolved and developed for use on, and in conjunction with, the specified project. None of such ideas, designs, arrangements or plans shall be used by, or disclosed to any person, firm or corporation for any purpose whatsoever without the written permission of NICHOLS, MELBURG and ROSSETTO.

NICHOLS MELBURG & ROSSETTO
ARCHITECTS + ENGINEERS
300 KNOLLCREST DRIVE
REDDING, CA. 96002
(530) 222-3300 (530) 222-3538 FAX
http://www.nmrdesign.com

CONSULTANTS

tk1sc
Member of WSP
11870 Pierce Street, Suite 160
Riverside, California 92505
951.299.4160 www.tk1sc.com

Project Leader - Jerry Leonhardt
Electrical Lead - Jerry Leonhardt
WSP Job #: B2305166.000

LICENSE STAMPS

REGISTERED PROFESSIONAL ENGINEER RAYMOND W. SWARTZ No. E15610 Exp. 12/31/2025 ELECTRICAL STATE OF CALIFORNIA

PROJECT NAME

TEHAMA COUNTY
CORNING
VETERAN'S HALL

1620 SOLANO ST.
CORNING, CA

SHEET TITLE

SITE ELECTRICAL PLAN

DRAWING STATUS

CONSTRUCTION DOCUMENTS

REVISIONS

Sym.	Description	Date

Drawn By	
Date Issued	2/13/2025
Scale	1"=10'-0"
Project No.	21-6497

SHEET No.

E1.0

Login Name: USGL700366
Plot Date: February 13, 2025 - 9:23 am
File Name: P:\2023\B2305166.000 Corning Veterans Hall Remod\Drawings and Models\CAD\Electrical\E1-0.dwg
XREFS: x-CVH_Title Block ; x-CVH-site ; x-CVH-flr1 ; x-CVH-GRID

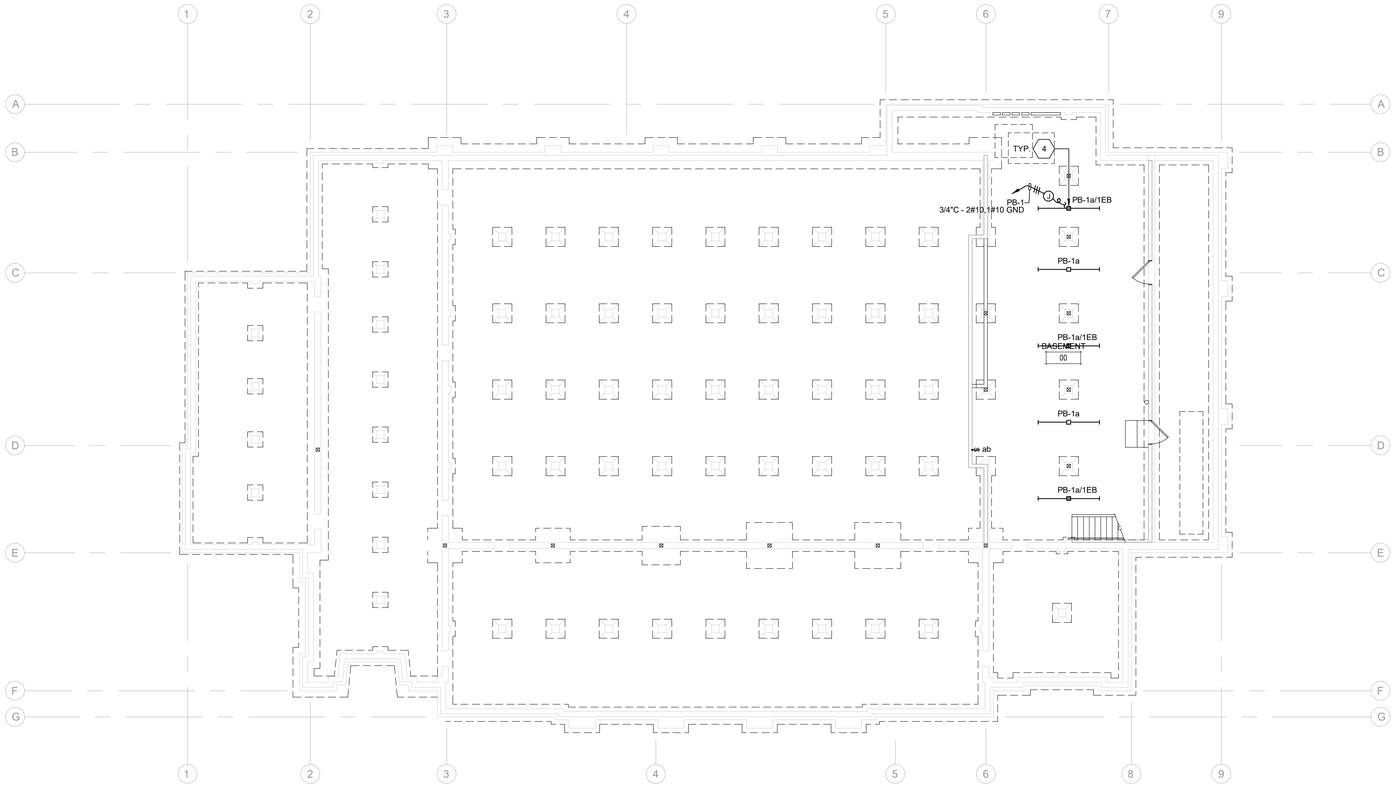

LIGHTING PLAN - BASEMENT

SCALE: 1/8" = 1'-0"

PLAN NOTES:

1 -

LIGHTING PLAN GENERAL NOTES:

1. REFER TO ARCHITECTURAL PLANS FOR EXACT LOCATION AND ELEVATION OF ALL LIGHTING FIXTURES AND ALL DEVICES. ALL WALL-MOUNTED DEVICE HEIGHTS SHALL BE VERIFIED WITH THE ARCHITECT PRIOR TO ROUGH-IN.
2. VERIFY EXACT CEILING CONSTRUCTION WITH ARCHITECTURAL REFLECTED CEILING PLAN AND SPECS. PROVIDE LIGHTING FIXTURES WITH ALL NECESSARY MOUNTING HARDWARE.
3. ALL RECESSED FIXTURES SHALL BE PROVIDED WITH ALL STRUCTURAL SUPPORTS AS REQUIRED BY THE IBC, OR CBC WHERE ADOPTED, IN ADDITION TO ANY LOCAL CODES.
4. ALL PERIMETER AND COVE LIGHTING SHALL EXTEND THE FULL LENGTH OF THE WALLS OR COVE. CONTRACTOR TO FIELD MEASURE COVE LENGTH AND ORDER QUANTITY OF FIXTURES AS REQUIRED.
5. ALL LINE VOLTAGE DIMMING BRANCH CIRCUITS SHALL BE PROVIDED WITH A DEDICATED NEUTRAL CONDUCTOR FOR EACH ZONE/CHANNEL.
6. RECESSED FIXTURES LOCATED IN A FIRE-RATED CEILING OR WALL SHALL BE PROVIDED WITH A 5-SIDED, RATED ENCLOSURE SO CONSTRUCTED AS TO ALLOW CODE AND MANUFACTURER-REQUIRED CLEARANCES BETWEEN THE FIXTURE AND THE ENCLOSURE.
7. REFER TO ARCHITECTURAL REFLECTED CEILING PLANS FOR EXIT SIGN CHEVRONS AND NUMBER OF FACES PER EXIT SIGN. ANY DISCREPANCIES BETWEEN EXIT SIGNS SHOWN ON THE ELECTRICAL AND ARCHITECTURAL PLANS SHALL BE BROUGHT TO THE ATTENTION OF THE ARCHITECT PRIOR TO ORDERING EXIT SIGNS.
8. WHEN EXPOSED CEILINGS OR OPEN GRID CONDITIONS OCCUR, THE CONTRACTOR WILL NEED TO PROVIDE THE FOLLOWING ITEMS:
   a. ALL BRANCH CIRCUITS SHALL BE EMT.
   b. ALL BRANCH CIRCUITS SHALL BE ROUTED ORTHOGONALLY, NEATLY TRAINED, IN PARALLEL TO STRUCTURES OR DUCTWORK. THE TERM "TRAINED" MEANS ALL PARALLEL CONDUITS SHALL MAINTAIN THE SAME SPATIAL RELATIONSHIP WITH EACH OTHER FOR ENTIRE RUN TO INCLUDE RADIUS BENDS AND SWEEPS.
   c. VISUALLY OBJECTIONABLE BRANCH CIRCUITS WILL BE REROUTED AT THE REQUEST OF THE ARCHITECT AT NO ADDITIONAL COST.
9. ALL LED REMOTE INDICATORS FOR DUCT DETECTORS AND FIRE/SMOKE DAMPERS REQUIRED BY THE LOCAL AHJ SHALL BE LOCATED IN CEILINGS IN COORDINATION WITH ARCHITECT PRIOR TO ANY ROUGH-IN.
10. PROVIDE ADDITIONAL J-BOX NEAR PANEL FOR MULTIPLE HOMERUN CIRCUITRY.
11. UNLESS SPECIFICALLY SHOWN AS (E), (R), (ER), (D), EXISTING OR NON-BOLD, ALL ELECTRICAL DEVICES SHOWN ARE NEW.
12. REFER TO GENERAL POWER PLAN NOTES AND COMMUNICATIONS PATHWAYS GENERAL NOTE FOR ADDITIONAL REQUIREMENTS WHEN POWER AND/OR DATA DEVICES ARE SHOWN ON THIS PLAN.
13. ALL PENETRATIONS THROUGH FIRE RATED WALLS SHALL BE PROTECTED FROM THE SPREAD OF FIRE WITH AN APPROVED FIRESTOP SYSTEM EQUAL OR GREATER THAN THE FIRE RATING OF THE WALL.
14. PROVIDE REDUNDANT GROUND PATH IN ALL BRANCH CIRCUITS SERVING PATIENT CARE AREAS CONSISTING OF A SEPARATE, INSULATED EQUIPMENT GROUNDING CONDUCTOR PER NEC, OR CEC WHERE ADOPTED, ART 517.13.

Copyright © 2025

All ideas, designs, arrangements and plans indicated or represented by this drawing are owned by, and the property of, NICHOLS, MELBURG and ROSSETTO and were created, evolved and developed for use on, and in conjunction with, the specified project. None of such ideas, designs, arrangements and plans shall be used by or disclosed to any person, firm or corporation for any purpose whatsoever without the written permission of NICHOLS, MELBURG and ROSSETTO.

NICHOLS MELBURG & ROSSETTO
ARCHITECTS + ENGINEERS

300 KNOLLCREST DRIVE
REDDING, CA. 96002
(530) 222-3300 (530) 222-3538 FAX
http://www.nmrdesign.com

CONSULTANTS

tk1sc
Member of WSP
11870 Pierce Street, Suite 160
Riverside, California 92505
951.299.4160 www.tk1sc.com

Project Leader - Jerry Leonhardt
Electrical Lead - Jerry Leonhardt
WSP Job #: B2305166.000

LICENSE STAMPS

REGISTERED PROFESSIONAL ENGINEER
RAYMOND P. SHAFFER
No. E15610
12/31/2025
ELECTRICAL
STATE OF CALIFORNIA

PROJECT NAME

TEHAMA COUNTY
CORNING
VETERAN'S HALL

1620 SOLANO ST.
CORNING, CA

SHEET TITLE

LIGHTING PLAN - BASEMENT

DRAWING STATUS

CONSTRUCTION DOCUMENTS

REVISIONS

Sym.	Description	Date

Drawn By	
Date Issued	2/13/2025
Scale	1/8" = 1'-0"
Project No.	21-6497

SHEET No.

E2.1

Logo Name: USQL7700W6
Plot Date: February 13, 2025 - 9:24 am
File Name: P:\2021\B2305166\00 Corning Veterans Hall Remod\Drawings and Models\CAD\Electrical\E2-1dwg
XREFS: x-CAL; Title Block; x-CVH-HS; x-CVH-HS2

PLAN NOTES:

1. RECONNECT EXISTING STAGE LIGHTING TO PANEL PB. PROVIDE NEW CONDUIT AND WIRING AS REQUIRED TO EXTEND EXISTING CIRCUITING TO NEW PANEL LOCATION.

2. EXISTING DECORATIVE SCONCE TO BE REINSTALLED AT ORIGINAL LOCATION CENTERED BETWEEN WINDOWS. RE-LAMP WITH EQUIVALENT LED BULBS.

3. PROVIDE RELAY AS REQUIRED FOR CONTROL OF EXTERIOR LIGHTING BY PHOTOCELL ON / TIMECLOCK OFF. MOUNT RELAY IN SEPARATE BARRIERED COMPARTMENT OF PANELBOARD.

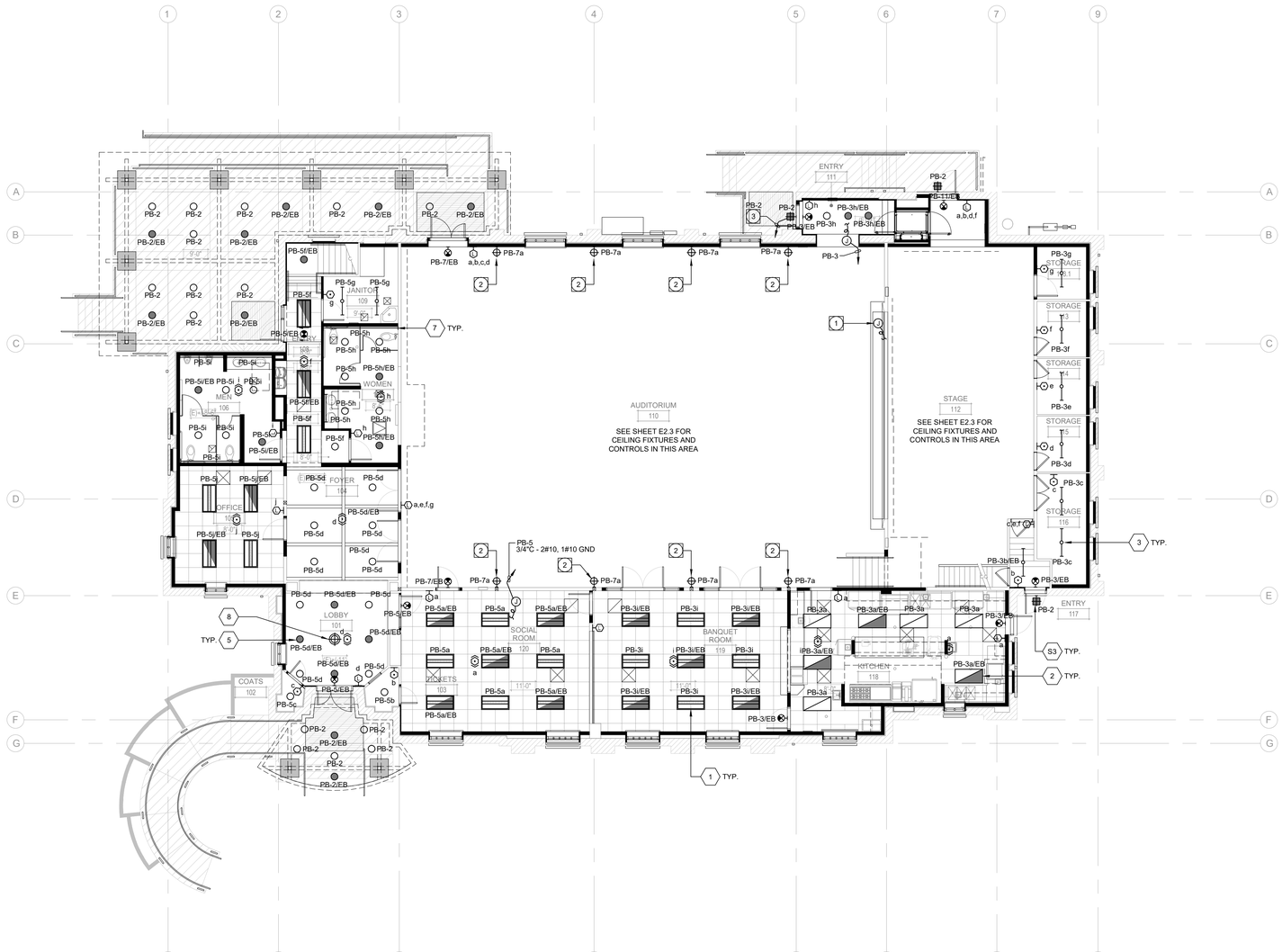

LIGHTING PLAN - LEVEL 1

SCALE: 1/8" = 1'-0"

LIGHTING PLAN GENERAL NOTES:

1. REFER TO ARCHITECTURAL PLANS FOR EXACT LOCATION AND ELEVATION OF ALL LIGHTING FIXTURES AND ALL DEVICES. ALL WALL-MOUNTED DEVICE HEIGHTS SHALL BE VERIFIED WITH THE ARCHITECT PRIOR TO ROUGH-IN.
2. VERIFY EXACT CEILING CONSTRUCTION WITH ARCHITECTURAL REFLECTED CEILING PLAN AND SPECS. PROVIDE LIGHTING FIXTURES WITH ALL NECESSARY MOUNTING HARDWARE.
3. ALL RECESSED FIXTURES SHALL BE PROVIDED WITH ALL STRUCTURAL SUPPORTS AS REQUIRED BY THE IBC, OR CBC WHERE ADOPTED, IN ADDITION TO ANY LOCAL CODES.
4. ALL PERIMETER AND COVE LIGHTING SHALL EXTEND THE FULL LENGTH OF THE WALLS OR COVE. CONTRACTOR TO FIELD MEASURE COVE LENGTH AND ORDER QUANTITY OF FIXTURES AS REQUIRED.
5. ALL LINE VOLTAGE DIMMING BRANCH CIRCUITS SHALL BE PROVIDED WITH A DEDICATED NEUTRAL CONDUCTOR FOR EACH ZONE/CHANNEL.
6. RECESSED FIXTURES LOCATED IN A FIRE-RATED CEILING OR WALL SHALL BE PROVIDED WITH A 5-SIDED, RATED ENCLOSURE SO CONSTRUCTED AS TO ALLOW CODE AND MANUFACTURER-REQUIRED CLEARANCES BETWEEN THE FIXTURE AND THE ENCLOSURE.
7. REFER TO ARCHITECTURAL REFLECTED CEILING PLANS FOR EXIT SIGN CHEVRONS AND NUMBER OF FACES PER EXIT SIGN. ANY DISCREPANCIES BETWEEN EXIT SIGNS SHOWN ON THE ELECTRICAL AND ARCHITECTURAL PLANS SHALL BE BROUGHT TO THE ATTENTION OF THE ARCHITECT PRIOR TO ORDERING EXIT SIGNS.
8. WHEN EXPOSED CEILINGS OR OPEN GRID CONDITIONS OCCUR, THE CONTRACTOR WILL NEED TO PROVIDE THE FOLLOWING ITEMS:
   a. ALL BRANCH CIRCUITS SHALL BE EMT.
   b. ALL BRANCH CIRCUITS SHALL BE ROUTED ORTHOGONALLY, NEATLY TRAINED, IN PARALLEL TO STRUCTURES OR DUCTWORK. THE TERM "TRAINED" MEANS ALL PARALLEL CONDUITS SHALL MAINTAIN THE SAME SPATIAL RELATIONSHIP WITH EACH OTHER FOR ENTIRE RUN TO INCLUDE RADIUS BENDS AND SWEEPS.
   c. VISUALLY OBJECTIONABLE BRANCH CIRCUITS WILL BE REROUTED AT THE REQUEST OF THE ARCHITECT AT NO ADDITIONAL COST.
9. ALL LED REMOTE INDICATORS FOR DUCT DETECTORS AND FIRE/SMOKE DAMPERS REQUIRED BY THE LOCAL AHJ SHALL BE LOCATED IN CEILINGS IN COORDINATION WITH ARCHITECT PRIOR TO ANY ROUGH-IN.
10. PROVIDE ADDITIONAL J-BOX NEAR PANEL FOR MULTIPLE HOMERUN CIRCUITRY.
11. UNLESS SPECIFICALLY SHOWN AS (E), (R), (ER), (D), EXISTING OR NON-BOLD, ALL ELECTRICAL DEVICES SHOWN ARE NEW.
12. REFER TO GENERAL POWER PLAN NOTES AND COMMUNICATIONS PATHWAYS GENERAL NOTE FOR ADDITIONAL REQUIREMENTS WHEN POWER AND/OR DATA DEVICES ARE SHOWN ON THIS PLAN.
13. ALL PENETRATIONS THROUGH FIRE RATED WALLS SHALL BE PROTECTED FROM THE SPREAD OF FIRE WITH AN APPROVED FIRESTOP SYSTEM EQUAL OR GREATER THAN THE FIRE RATING OF THE WALL.
14. PROVIDE REDUNDANT GROUND PATH IN ALL BRANCH CIRCUITS SERVING PATIENT CARE AREAS CONSISTING OF A SEPARATE, INSULATED EQUIPMENT GROUNDING CONDUCTOR PER NEC, OR CEC WHERE ADOPTED, ART 517.13.

Copyright © 2025

All ideas, designs, arrangements and plans indicated or represented by this drawing are owned by, and the property of, NICHOLS, MELBURG and ROSSETTO and were created, evolved and developed for use on, and in conjunction with, the specified project. None of such ideas, designs, arrangements and plans shall be used, or disclosed to any person, firm or corporation for any purpose whatsoever without the written permission of NICHOLS, MELBURG and ROSSETTO.

NICHOLS MELBURG & ROSSETTO
ARCHITECTS + ENGINEERS

300 KNOLLCREST DRIVE
REDDING, CA. 96002
(530) 222-3300 (530) 222-3538 FAX
http://www.nmrdesign.com

CONSULTANTS

tk1sc
Member of WSP
11870 Pierce Street, Suite 160
Riverside, California 92505
951.299.4160 www.tk1sc.com

Project Leader - Jerry Leonhardt
Electrical Lead - Jerry Leonhardt
WSP Job #: B2305166.000

LICENSE STAMPS

REGISTERED PROFESSIONAL ENGINEER
RAYMOND W. SIMONIZ
No. E15610
12/31/2025
STATE OF CALIFORNIA

PROJECT NAME

TEHAMA COUNTY
CORNING
VETERAN'S HALL

1620 SOLANO ST.
CORNING, CA

SHEET TITLE

LIGHTING PLAN - LEVEL 1

DRAWING STATUS

CONSTRUCTION DOCUMENTS

REVISIONS

Sym.	Description	Date

Drawn By	
Date Issued	2/13/2025
Scale	1/8" = 1'-0"
Project No.	21-6497

SHEET No.

E2.2

Logir Name: LEGL70096
Plot Date: February 13, 2025 - 9:25 am
File Name: P:\2021\B2305166.000 Corning Veterans Hall Remod\Drawings and Models\CAD\Electrical\E2-2.dwg
XREFS: x-CAL_Title Block, x-CVH-R1, x-CVH-SHELL, x-CVH-ref

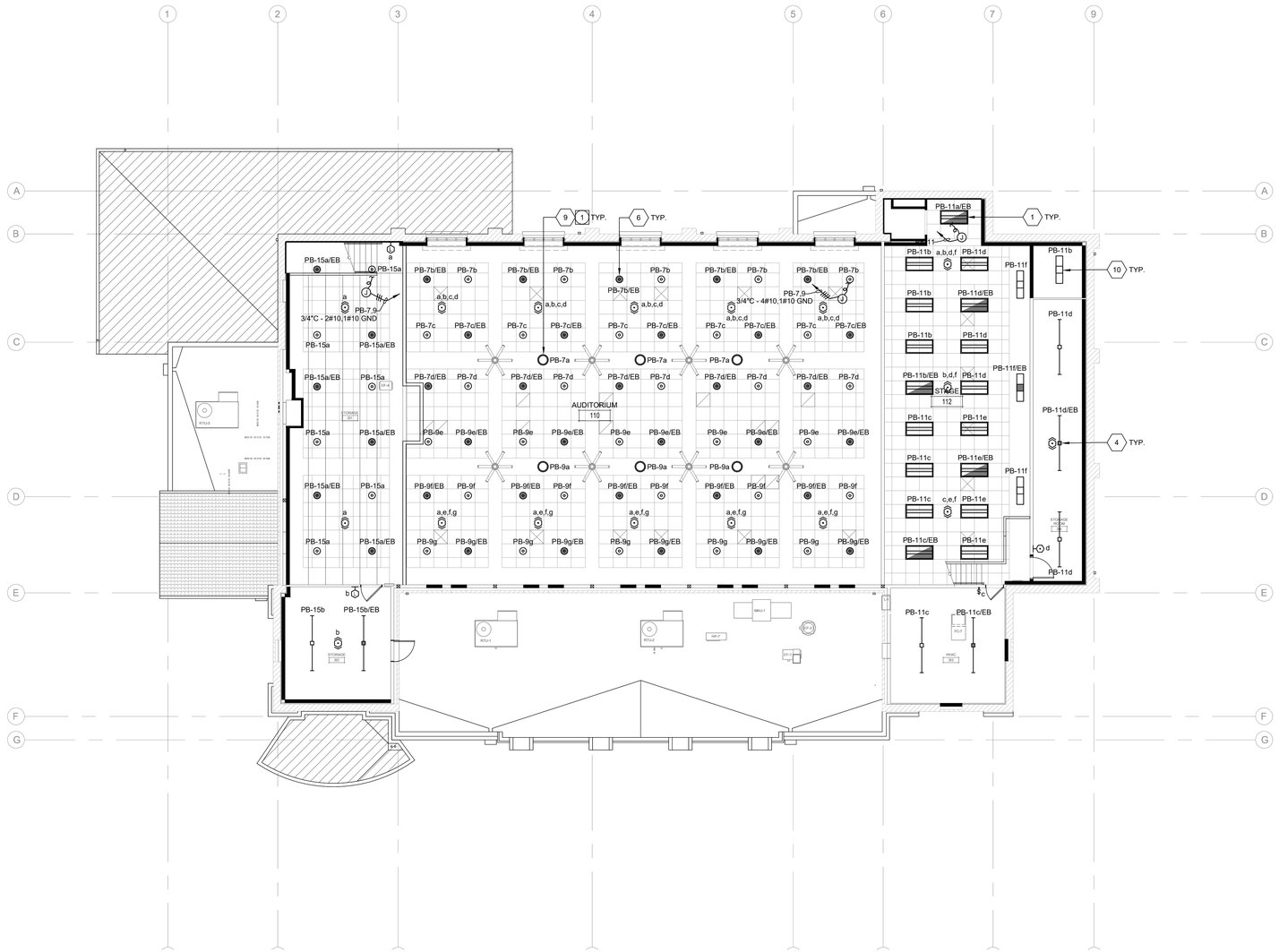

LIGHTING PLAN - LEVEL 2

SCALE: 1/8" = 1'-0"

PLAN NOTES:

1. EXISTING DECORATIVE CHAIN HUNG FIXTURE TO BE REINSTALLED AT NEW LOCATION IN NEW CEILING. RE-LAMP WITH EQUIVALENT LED BULBS.

LIGHTING PLAN GENERAL NOTES:

1. REFER TO ARCHITECTURAL PLANS FOR EXACT LOCATION AND ELEVATION OF ALL LIGHTING FIXTURES AND ALL DEVICES. ALL WALL-MOUNTED DEVICE HEIGHTS SHALL BE VERIFIED WITH THE ARCHITECT PRIOR TO ROUGH-IN.
2. VERIFY EXACT CEILING CONSTRUCTION WITH ARCHITECTURAL REFLECTED CEILING PLAN AND SPECS. PROVIDE LIGHTING FIXTURES WITH ALL NECESSARY MOUNTING HARDWARE.
3. ALL RECESSED FIXTURES SHALL BE PROVIDED WITH ALL STRUCTURAL SUPPORTS AS REQUIRED BY THE IBC, OR CBC WHERE ADOPTED, IN ADDITION TO ANY LOCAL CODES.
4. ALL PERIMETER AND COVE LIGHTING SHALL EXTEND THE FULL LENGTH OF THE WALLS OR COVE. CONTRACTOR TO FIELD MEASURE COVE LENGTH AND ORDER QUANTITY OF FIXTURES AS REQUIRED.
5. ALL LINE VOLTAGE DIMMING BRANCH CIRCUITS SHALL BE PROVIDED WITH A DEDICATED NEUTRAL CONDUCTOR FOR EACH ZONE/CHANNEL.
6. RECESSED FIXTURES LOCATED IN A FIRE-RATED CEILING OR WALL SHALL BE PROVIDED WITH A 5-SIDED, RATED ENCLOSURE SO CONSTRUCTED AS TO ALLOW CODE AND MANUFACTURER-REQUIRED CLEARANCES BETWEEN THE FIXTURE AND THE ENCLOSURE.
7. REFER TO ARCHITECTURAL REFLECTED CEILING PLANS FOR EXIT SIGN CHEVRONS AND NUMBER OF FACES PER EXIT SIGN. ANY DISCREPANCIES BETWEEN EXIT SIGNS SHOWN ON THE ELECTRICAL AND ARCHITECTURAL PLANS SHALL BE BROUGHT TO THE ATTENTION OF THE ARCHITECT PRIOR TO ORDERING EXIT SIGNS.
8. WHEN EXPOSED CEILINGS OR OPEN GRID CONDITIONS OCCUR, THE CONTRACTOR WILL NEED TO PROVIDE THE FOLLOWING ITEMS:
   a. ALL BRANCH CIRCUITS SHALL BE EMT.
   b. ALL BRANCH CIRCUITS SHALL BE ROUTED ORTHOGONALLY, NEATLY TRAINED, IN PARALLEL TO STRUCTURES OR DUCTWORK. THE TERM "TRAINED" MEANS ALL PARALLEL CONDUITS SHALL MAINTAIN THE SAME SPATIAL RELATIONSHIP WITH EACH OTHER FOR ENTIRE RUN TO INCLUDE RADIUS BENDS AND SWEEPS.
   c. VISUALLY OBJECTIONABLE BRANCH CIRCUITS WILL BE REROUTED AT THE REQUEST OF THE ARCHITECT AT NO ADDITIONAL COST.
9. ALL LED REMOTE INDICATORS FOR DUCT DETECTORS AND FIRE/SMOKE DAMPERS REQUIRED BY THE LOCAL AHJ SHALL BE LOCATED IN CEILINGS IN COORDINATION WITH ARCHITECT PRIOR TO ANY ROUGH-IN.
10. PROVIDE ADDITIONAL J-BOX NEAR PANEL FOR MULTIPLE HOMERUN CIRCUITRY.
11. UNLESS SPECIFICALLY SHOWN AS (E), (R), (ER), (D), EXISTING OR NON-BOLD, ALL ELECTRICAL DEVICES SHOWN ARE NEW.
12. REFER TO GENERAL POWER PLAN NOTES AND COMMUNICATIONS PATHWAYS GENERAL NOTE FOR ADDITIONAL REQUIREMENTS WHEN POWER AND/OR DATA DEVICES ARE SHOWN ON THIS PLAN.
13. ALL PENETRATIONS THROUGH FIRE RATED WALLS SHALL BE PROTECTED FROM THE SPREAD OF FIRE WITH AN APPROVED FIRESTOP SYSTEM EQUAL OR GREATER THAN THE FIRE RATING OF THE WALL.
14. PROVIDE REDUNDANT GROUND PATH IN ALL BRANCH CIRCUITS SERVING PATIENT CARE AREAS CONSISTING OF A SEPARATE, INSULATED EQUIPMENT GROUNDING CONDUCTOR PER NEC, OR CEC WHERE ADOPTED, ART 517.13.

Copyright © 2025
All ideas, designs, arrangements and plans indicated or represented by this drawing are owned by, and the property of, NICHOLS, MELBURG and ROSSETTO and were created, evolved and developed for use on, and in conjunction with, the specified project. None of such ideas, designs, arrangements and plans shall be used by or disclosed to any person, firm or corporation for any purpose whatsoever without the written permission of NICHOLS, MELBURG and ROSSETTO.

NICHOLS MELBURG & ROSSETTO
ARCHITECTS + ENGINEERS
300 KNOLLCREST DRIVE
REDDING, CA. 96002
(530) 222-3300 (530) 222-3538 FAX
http://www.nmrdesign.com

CONSULTANTS

tk1sc
Member of WSP
11870 Pierce Street, Suite 160
Riverside, California 92505
951.299.4160 www.tk1sc.com
Project Leader - Jerry Leonhardt
Electrical Lead - Jerry Leonhardt
WSP Job #: B2305166.000

LICENSE STAMPS

REGISTERED PROFESSIONAL ENGINEER
RAYMOND W. SHAFFER
No. E15610
12/31/2025
ELECTRICAL
STATE OF CALIFORNIA

PROJECT NAME

TEHAMA COUNTY
CORNING
VETERAN'S HALL

1620 SOLANO ST.
CORNING, CA

SHEET TITLE

LIGHTING PLAN - LEVEL 2

DRAWING STATUS

CONSTRUCTION DOCUMENTS

REVISIONS

Sym.	Description	Date

Drawn By	
Date Issued	2/13/2025
Scale	1/8" = 1'-0"
Project No.	21-6497

SHEET No.

E2.3

Logo Name: LRG2_370356
Plot Date: February 13, 2025 - 9:25 am
File Name: P:\2021\B2305166.000 Corning Veterans Hall Remod\Drawings and Models\CAD\Electrical\E2-3.dwg
XREFS: x-CVH_Title Block, x-CVH-REF, x-CVH-GRID, x-CVH-ref2

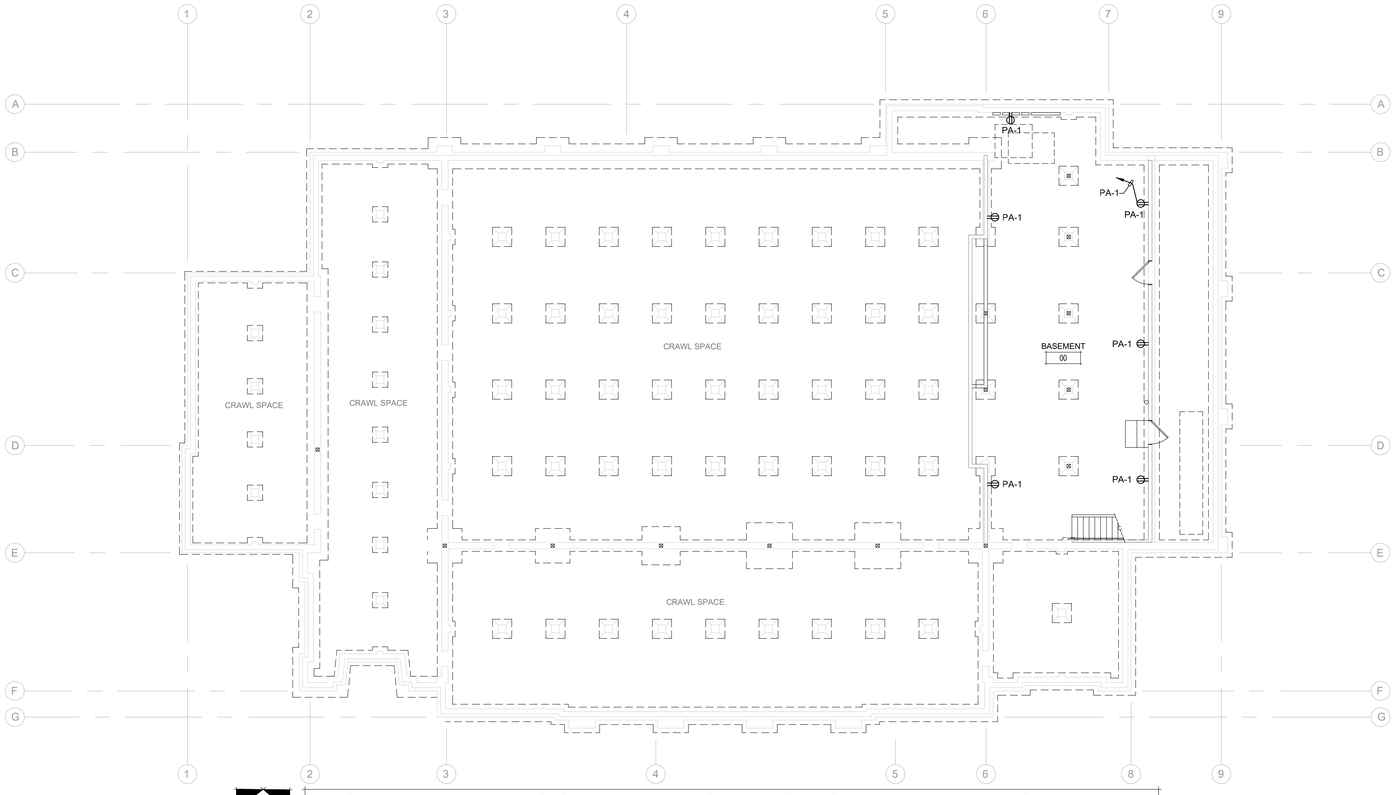

POWER AND COMMUNICATIONS PLAN - BASEMENT

SCALE: 1/8" = 1'-0"

PLAN NOTES:

1 -

TELECOMMUNICATION PATHWAYS & GENERAL NOTES:

1. CONDUITS SHALL (a) CONTAIN NO CONTINUOUS SECTIONS LONGER THAN 30M (98 FT.), AND (b) CONTAIN NO MORE THAN (2) 90° BENDS OR (1) REVERSE BEND WITHOUT INSTALLING A PULL BOX. SPLIT CONDUITS IN PLACE OF PULL BOXES ARE UNACCEPTABLE.
2. CONDUITS SHALL CONTAIN PLASTIC OR NYLON PULL TAPE RATED AT 200 LBS. WITH A MINIMUM OF 5 FEET OF EXTRA PULL TAPE COILED AT EACH END.
3. CONDUIT BEND RADIUS SHALL BE (a) A MINIMUM OF 6 TIMES THE INTERNAL CONDUIT DIAMETER FOR CONDUITS 2-INCHES IN DIAMETER OR LESS, AND (b) 10 TIMES THE INTERNAL CONDUIT DIAMETER FOR CONDUITS MORE THAN 2-INCHES IN DIAMETER.
4. TERMINATE CONDUIT STUBS AND SLEEVES THAT PROTRUDE THROUGH STRUCTURAL FLOORS 2-INCHES TO 3-INCHES ABOVE THE FLOOR SURFACE.
5. INSTALL BUSHINGS OR BELL ENDS AS REQUIRED ON ALL CONDUITS.
6. FLEX CONDUIT IS UNACCEPTABLE FOR USE AS A COMMUNICATIONS CONDUIT EXCEPT AT SEISMIC JOINTS AND/OR IF APPROVED IN WRITING BY THE ENGINEER.
7. ALL UNDER SLAB OR IN-SLAB CONDUITS SHALL BE INSTALLED IN A MANNER THAT PREVENTS WATER INFILTRATION OF THE CONDUIT. IT IS THE CONTRACTOR'S RESPONSIBILITY TO ENSURE GROUND WATER, RAIN WATER OR CONSTRUCTION WATER IS PREVENTED FROM ENTERING AND/OR REMOVED FROM THE CONDUITS PRIOR TO PLACEMENT OF COMMUNICATIONS CABLES. SEE ELECTRICAL SPECIFICATIONS, DETAILS AND PLANS FOR ADDITIONAL CONDUIT SEALING REQUIREMENTS.
8. WHERE OPEN CEILINGS OCCUR CONDUCTORS SHALL BE INSTALLED INSIDE RACEWAY (CONDUIT). PROVIDE ALL RACEWAY, CONDUITS AND CONDUIT SLEEVES WHETHER OR NOT SHOWN ON THE PLAN DRAWINGS. THIS APPLIES TO ALL LOW VOLTAGE AND SIGNAL SYSTEMS CONDUCTORS INCLUDING DATA, TELEPHONE, SECURITY, PUBLIC ADDRESS, CLOCKS, AUDIO VISUAL, CATV, SURVEILLANCE CAMERAS, FIRE ALARM, BMS/EMS, ETCETERA. INCLUDE ALL COSTS IN BASE BID.
9. WHERE INACCESSIBLE CEILINGS OCCUR CONDUCTORS SHALL BE INSTALLED INSIDE CONDUIT RACEWAY. PROVIDE ALL CONDUITS AND CONDUIT SLEEVES WHETHER OR NOT SHOWN ON THE PLAN DRAWINGS. THIS APPLIES TO ALL LOW VOLTAGE AND SIGNAL SYSTEMS CONDUCTORS INCLUDING DATA, TELEPHONE, SECURITY, PUBLIC ADDRESS, CLOCKS, AUDIO VISUAL, CATV, SURVEILLANCE CAMERAS, FIRE ALARM, BMS/EMS, ETCETERA. INCLUDE ALL COSTS IN BASE BID.
10. PROVIDE ANY AND ALL CONDUIT SLEEVES AS MAY BE REQUIRED WHENEVER LOW VOLTAGE CONDUCTORS PASS THROUGH AN INTERIOR OR EXTERIOR WALL, FLOOR, OR ANY STRUCTURAL ASSEMBLY. PROPERLY FIRE STOP ALL PENETRATIONS THROUGH FIRE RATED ASSEMBLIES PER THE NEC AND ELECTRICAL SPECIFICATIONS. INCLUDE ALL COSTS IN BASE BID.
11. PROVIDE SOUND STOP MATERIAL FOR ALL CONDUIT PENETRATIONS IN SOUND RATED WALL ASSEMBLIES.
12. ALL PULL BOXES SHALL BE SIZED AND INSTALLED PER ANSI-TIA-569-C. PULL BOXES FOR INJUNDER SLAB CONDUIT RUNS ARE NOT PERMITTED UNLESS OTHERWISE NOTED. PULL BOXES FOR OVERHEAD CONDUIT RUNS SHALL BE LOCATED ABOVE ACCESSIBLE CEILINGS WITHIN THE ACCESSIBLE CEILING SPACE AND SUPPORTED INDEPENDENTLY FROM THE STRUCTURE AND CONDUIT SUPPORTS. PULL BOXES FOR ROOF MOUNTED OR EXTERIOR ABOVE GRADE APPLICATIONS SHALL BE NEMA 3R RATED. PULL BOXES SHALL BE SIZED ACCORDING TO THE FOLLOWING:

CONDUIT SIZE	WIDTH	LENGTH	DEPTH	WIDTH INCREASE PER ADDITIONAL CONDUIT
1"	4"	16"	3"	2"
2"	8"	36"	4"	5"
3"	12"	48"	5"	6"
4"	15"	60"	8"	8"

FOR OTHER CONDUIT SIZES REFER TO ANSI/TIA-569-C TABLE 12. - LATEST PUBLISHED EDITION.

13. CONDUIT(S) SHALL EXIT A PULL BOX ON THE WALL OPPOSITE THE WALL ENTERED.
14. ALL PULL BOXES INSTALLED ON TOP OF ROOFS OR ATTACHED TO CANOPIES SHALL BE RATED NEMA-3R OR NEMA-4. PROVIDE QUANTITY AND SIZE OF PULL BOXES AS REQUIRED TO COMPLY WITH THESE GENERAL PATHWAY NOTES. PAINT BOXES TO MATCH SURROUNDING SURFACES.
15. ALL CONDUITS INSTALLED ON EXTERIOR OF BUILDINGS AND CANOPIES SHALL BE GALVANIZED. PAINT ALL CONDUITS TO MATCH SURROUNDING SURFACES.
16. PROVIDE LABELING OF EACH CONDUIT PER GENERAL ELECTRICAL SPECIFICATIONS.
17. PROVIDE INTERNAL/EXTERNAL GAS AND WATER TIGHT MECHANICAL SEALING/PLUGGING OF EACH UNDERGROUND BUILDING ENTRY CONDUIT AS SPECIFIED ELSEWHERE IN THE DRAWINGS AND SPECIFICATIONS.
18. ALL CONDUITS EXPOSED TO VIEW (I.E.: OPEN CEILING SPACES) SHALL BE PAINTED TO MATCH SURROUNDING SURFACES. CONDUITS INSTALLED ABOVE HARD CEILINGS OR INACCESSIBLE CEILINGS ARE EXEMPT FROM PAINTING.
19. ELECTRICAL CONTRACTOR SHALL REFERENCE ALL E-SERIES, T-SERIES AND AV-SERIES SHEETS FOR ADDITIONAL CONDUIT REQUIREMENTS.

POWER PLAN GENERAL NOTES:

1. ALL RECEPTACLES ON COMMON WALLS SHALL BE SEPARATE BOXES AND OFFSET 24-INCHES MINIMUM.
2. ALL PENETRATIONS THROUGH FIRE RATED WALLS SHALL BE PROTECTED FROM THE SPREAD OF FIRE WITH AN APPROVED FIRESTOP SYSTEM EQUAL OR GREATER THAN THE FIRE RATING OF THE WALL.
3. ALL WALL-MOUNTED DEVICE HEIGHTS SHALL BE VERIFIED WITH THE ARCHITECT PRIOR TO ROUGH-IN.
4. ALL FURNITURE FEED LOCATIONS TO BE VERIFIED WITH ARCHITECT AND FURNITURE VENDOR PRIOR TO ROUGH-IN.
5. ALL FURNITURE WHIPS SHALL BE TRIMMED TO REDUCE EXCESS WHIP LENGTH.
6. WHEN EXPOSED CEILINGS OR OPEN GRID CONDITIONS OCCUR, THE CONTRACTOR WILL NEED TO PROVIDE THE FOLLOWING ITEMS:
   a. ALL BRANCH CIRCUITS SHALL BE EMT.
   b. ALL BRANCH CIRCUITS SHALL BE ROUTED ORTHOGONALLY, NEATLY TRAINED, IN PARALLEL TO STRUCTURES OR DUCTWORK. THE TERM "TRAINED" MEANS ALL PARALLEL CONDUITS SHALL MAINTAIN THE SAME SPATIAL RELATIONSHIP WITH EACH OTHER FOR ENTIRE RUN TO INCLUDE RADIUS BENDS AND SWEEPS.
   c. VISUALLY OBJECTIONABLE BRANCH CIRCUITS WILL BE REROUTED AT THE REQUEST OF THE ARCHITECT AT NO ADDITIONAL COST.
7. EXPOSED CABLE/CONDUCTORS INSTALLED IN A PLENUM SPACE SHALL CONFORM TO NEC, OR CEC WHERE ADOPTED, ARTICLE 300.22(C).
8. PROVIDE G.F.C.I. TYPE RECEPTACLE(S) OR RECEPTACLE(S) PROTECTED BY A GFCI CIRCUIT BREAKER(S) WHEN RECEPTACLES ARE 50A OR LESS, 150V TO GROUND OR LESS AND ARE LOCATED WITHIN 6-FEET OF ANY SINK OR THERAPEUTIC TUB, LAUNDRY AREA, SERVING ANY DRINKING FOUNTAIN OR VENDING MACHINE, WITHIN ANY KITCHEN SPACE, LOCKER ROOM AREA, GARAGE AND BATHROOM SPACE AND/OR LOCATED OUTDOORS. WHERE RECEPTACLES ARE NOT READILY ACCESSIBLE, PROVIDE GFCI CIRCUIT BREAKER(S) TO PROTECT THE RESPECTIVE BRANCH CIRCUIT AND PROVIDE ADDITIONAL NEUTRAL CONDUCTORS IN THE BRANCH CIRCUITING AS REQUIRED TO ENSURE PROPER GFCI FUNCTION.
9. PROVIDE OCCUPANCY SENSOR/LIGHTING CONTROL SYSTEM CONTROLLED RECEPTACLE RELAY(S) AS REQUIRED TO SWITCH CONTROLLED RECEPTACLES. CONNECT BRANCH CIRCUITRY AND CONTROL WIRING AS REQUIRED TO ALLOW OCCUPANCY SENSOR/LIGHTING CONTROL SYSTEM RELAY TO SWITCH STANDALONE AND/OR SYSTEMS FURNITURE CONTROLLED RECEPTACLES AS INDICATED ON PLANS. PROVIDE ADDITIONAL CONDUIT, WIRING AND PATHWAYS NECESSARY TO CONNECT BRANCH CIRCUITRY AND CONTROL WIRING TO REMOTE RELAYS TO INCLUDE RELAY(S) LOCATED ON ALTERNATE FLOORS, IN ELECTRICAL ROOMS, ETC.
10. PROVIDE ADDITIONAL J-BOX NEAR PANEL FOR MULTIPLE HOMERUN CIRCUITRY.
11. UNLESS SPECIFICALLY SHOWN AS (E), (R), (ER), (D), EXISTING OR NON-BOLD, ALL ELECTRICAL DEVICES SHOWN ARE NEW.

Copyright © 2025

All ideas, designs, arrangements and plans indicated or represented by this drawing are owned by, and the property of, NICHOLS, MELBURG and ROSSETTO and were created, evolved and developed for use on, and in conjunction with, the specified project. None of such ideas, designs, arrangements and plans shall be used by or disclosed to any person, firm or corporation for any purpose whatsoever without the written permission of NICHOLS, MELBURG and ROSSETTO.

NICHOLS MELBURG & ROSSETTO
ARCHITECTS + ENGINEERS

300 KNOLLCREST DRIVE
REDDING, CA. 96002
(530) 222-3300 (530) 222-3538 FAX
http://www.nmrdesign.com

CONSULTANTS

tk1sc
Member of WSP
11870 Pierce Street, Suite 160
Riverside, California 92505
951.299.4160 www.tk1sc.com

Project Leader - Jerry Leonhardt
Electrical Lead - Jerry Leonhardt
WSP Job #: B2305166.000

LICENSE STAMPS

REGISTERED PROFESSIONAL ENGINEER
RAYMOND W. SHAFFER
No. E15610
12/31/2025
ELECTRICAL
STATE OF CALIFORNIA

PROJECT NAME

TEHAMA COUNTY
CORNING
VETERAN'S HALL

1620 SOLANO ST.
CORNING, CA

SHEET TITLE

POWER & COMMUNICATIONS PLAN - BASEMENT

DRAWING STATUS

CONSTRUCTION DOCUMENTS

REVISIONS

Sym.	Description	Date

Drawn By	
Date Issued	2/13/2025
Scale	1/8" = 1'-0"
Project No.	21-6497

SHEET No.

E2.4

Login Name: JSRZ-370196
Plot Date: February 13, 2025 - 9:56 am
File Name: P:\2023\B2305166\000 Corning Veterans Hall Remod\Drawings and Models\CAD\Electrical\E2.4.dwg
XREFS: x-CIVIL_Site Base; x-CIVIL-Xr; x-CIVIL-Xr2; x-CIVIL-Xr3

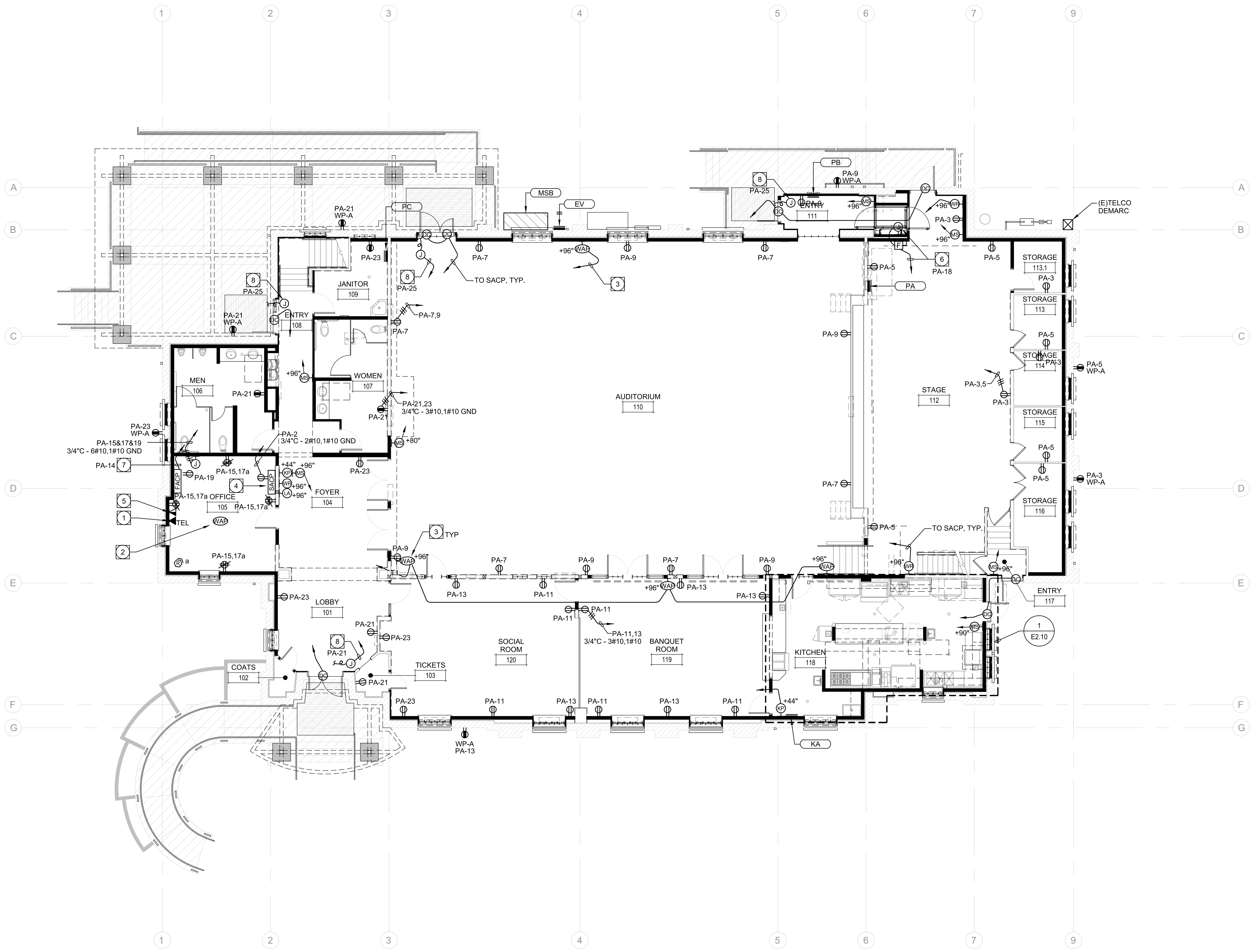

POWER AND COMMUNICATIONS PLAN - LEVEL 1

SCALE: 1/8" = 1'-0"

PLAN NOTES:

1. TELEPHONE OUTLET FOR INCOMING TELEPHONE LINES FROM TELCO UTILITY COMPANY'S DEMARCATION PROTECTOR ON EXTERIOR OF BUILDING. REFER TO FACEPLATE DETAILS FOR MORE INFORMATION. COORDINATE WIRING TERMINATION REQUIREMENTS WITH OWNER IN FIELD. FLUSH 4S/DP BOX WITH 1-GANG RING AND 34"C STUB TO ACCESSIBLE CEILING AND 1"C STUB DOWN TO CRAWL SPACE UNDER BUILDING. CABLES IN CRAWLSPACE SHALL BE FASTENED TO FLOOR JOISTS EVERY 3 TO 4 FEET MAX, AND CABLES SHALL NOT SAG DOWN MORE THAN 4 INCHES BETWEEN FASTENERS. METAL STAPLES, AND PLASTIC TIE WRAPS ARE NOT ACCEPTABLE FASTENERS; BRIDLE RINGS AND DRIVE RINGS ARE APPROVED FASTENERS.
2. ABOVE-CEILING DATA OUTLET FOR OWNER FURNISHED OWNER INSTALLED WIRELESS ACCESS POINT ELECTRONICS. ROUTE CABLE TO DATA CABINET IN OFFICE. REFER TO DATA NETWORK SYSTEM DIAGRAM AND FACEPLATE DETAILS FOR MORE INFORMATION.
3. WALL MOUNTED DATA OUTLET FOR OWNER FURNISHED OWNER INSTALLED WIRELESS ACCESS POINT ELECTRONICS. ROUTE CABLE TO ACCESSIBLE CEILING SPACE IN OFFICE ABOVE THE DATA/WAP CONSOLIDATION OUTLET. REFER TO DATA NETWORK SYSTEM DIAGRAM AND FACEPLATE DETAILS FOR MORE INFORMATION.
4. SECURITY ALARM SYSTEM CONTROL PANEL AND POWER SUPPLY COMPLETE PER SPECIFICATIONS. E.C. TO PROVIDE 120V 20A DUPLEX RECEPTACLE WITHIN 36 INCHES OF PANEL. COORDINATE FINAL LOCATION IN FIELD.
5. FLUSH DATA/WAP CONSOLIDATION OUTLET WITH TWO (2) 3/4"C STUBS TO ACCESSIBLE CEILING. FOR TERMINATION OF ALL CABLES FEEDING THE WAP OUTLETS. REFER TO FACEPLATE DETAILS AND DATA SYSTEM DIAGRAM FOR ADDITIONAL INFORMATION.
6. CONNECT TO WHEELCHAIR LIFT AS REQUIRED. THE CONTRACTOR SHALL PROVIDE ALL NECESSARY CONDUIT, WIRING, DISCONNECTS, ETCETERA. FOR A COMPLETE INSTALLATION.
7. PROVIDE 3/4"C. WITH 2#12, 1#12 GRD. TO 120V DEDICATED CIRCUIT FOR POWER. PROVIDE 20AMP, 1-POLE CIRCUIT BREAKER WITH APPROVED LOCK-ON DEVICE, RED INDICATOR AND IDENTIFIED AS "FIRE ALARM CONTROL CIRCUIT" (NFPA 72, SECTION 10.6.5.2). CONNECT AS REQUIRED. PROVIDE ALL REQUIRED MOUNTING HARDWARE. MATCH A.I.C. RATING OF DEVICES USED.
8. CONNECT TO "AUTOMATIC DOOR" POWER SUPPLY AS REQUIRED. COORDINATE WITH DOOR SUPPLIER PRIOR TO ROUGH-IN.

KITCHEN PLAN GENERAL NOTES:

1. INTERNAL WIRING AND PLUMBING OF FABRICATED FIXTURES SHALL BE THE RESPONSIBILITY OF THE FIXTURE MANUFACTURER, UNLESS OTHERWISE NOTED. FINAL HOOKUP OF EQUIPMENT AND FIXTURES SHALL BE BY THE ELECTRICAL AND/OR PLUMBING CONTRACTORS.
2. CONTRACTOR SHALL VERIFY ALL DIMENSIONS AT THE JOB SITE BEFORE STARTING FABRICATION OF CUSTOM FABRICATED FIXTURES.
3. CONVENIENCE OUTLETS SHALL BE SET HORIZONTALLY.
4. WHERE STUBBING UP OUT OF A FLOOR, CONDUIT SHALL EXTEND A MINIMUM OF 4" ABOVE THE FINISHED FLOOR OR CURB.
5. CONTRACTOR SHALL SUPPLY AND INSTALL STAINLESS STEEL COVER PLATES ON PARTIALLY OR WHOLLY EXPOSED PULL BOXES AND ACCESS BOXES.
6. CONTRACTOR SHALL SUPPLY AND INSTALL LOCKOUT DEVICES ON BREAKERS FOR CLOCKS, MECHANICAL REFRIGERATION SYSTEMS, CONTROL WIRING AND EXHAUST HOOD FIRE PROTECTION SYSTEM CONTROLS.
7. CONTRACTOR SHALL SUPPLY AND INSTALL SWITCHES FOR HEAT LAMPS, EXHAUST HOOD LIGHTS AND MAKE-UP AIR SYSTEMS. VERIFY LOCATIONS WITH ARCHITECT.
8. WHEN ELECTRIC SOLENOID GAS SHUTOFF VALVES ARE SPECIFIED FOR THE EXHAUST HOOD FIRE PROTECTION SYSTEM, THE EXHAUST HOOD FIRE PROTECTION SYSTEM CONTRACTOR SHALL FURNISH AND ELECTRICAL SHALL INSTALL THE DEVICES. REFER TO ARCHITECTURAL KITCHEN DRAWING, SHEET A-3.2.
9. CONTRACTOR SHALL PROVIDE POWER FOR AND CONNECT REFRIGERATION COMPRESSORS AND BLOWER COILS, AND AUTOMATIC DEFROST SYSTEMS SHOWN ON THE REFRIGERATION SCHEDULE. FURNISH AND INSTALL MAGNETIC STARTERS AND THERMO-OVERLOAD PROTECTION DEVICES AS REQUIRED.
10. CONTRACTOR SHALL PACK SEAL AND ALL EXPOSED J-BOXES AND CONDUIT ON WALK-IN COOLERS AND FREEZERS TO PREVENT INTERNAL CONDENSATION.
11. CONTRACTOR SHALL PROVIDE POWER TO AND CONNECT KITCHEN EXHAUST AND MAKE-UP AIR BLOWER MOTORS, WHETHER PROVIDED BY FOOD SERVICE EQUIPMENT AND FIXTURE CONTRACTOR OR HVAC SECTION.
12. CONTRACTOR SHALL PROVIDE CONDUITS AND PULL BOXES FOR REFRIGERATION, BEVERAGE AND SODA LINES.
13. BEFORE INSTALLING J-BOXES OR OTHER FITTINGS ON WALK-IN REFRIGERATOR WALLS OR CEILINGS, VERIFY EXISTENCE OF ADEQUATE SUPPORT AND INSULATION WITH REFRIGERATOR MANUFACTURER. ALL CONDUIT MOUNTED ON INTERIOR OF WALK-INS SHALL BE SPACED 1" OFF WALL.
14. VERIFY MOUNTING HEIGHTS WITH ARCHITECT PRIOR TO ROUGH-IN.
15. THE CONTRACTOR SHALL REVIEW ALL OF THE FOOD SERVICE EQUIPMENT PLANS PRIOR TO BID FOR ALL WORK REQUIRED BY THE CONTRACTOR AND SHALL INCLUDE IN THE BID ALL NECESSARY MATERIAL AND LABOR TO CONNECT AND PROVIDE CIRCUITING TO ALL KITCHEN EQUIPMENT. IF ANY DISCREPANCIES ARE FOUND THE CONTRACTOR SHALL ISSUE AN RFI FOR CLARIFICATION PRIOR TO BID.

ALL RECEPTACLES WITHIN KITCHEN OR SERVING AREA SHALL BE GFI-TYPE.

POWER PLAN GENERAL NOTES:

1. ALL RECEPTACLES ON COMMON WALLS SHALL BE SEPARATE BOXES AND OFFSET 24-INCHES MINIMUM.
2. ALL PENETRATIONS THROUGH FIRE RATED WALLS SHALL BE PROTECTED FROM THE SPREAD OF FIRE WITH AN APPROVED FIRESTOP SYSTEM EQUAL OR GREATER THAN THE FIRE RATING OF THE WALL.
3. ALL WALL-MOUNTED DEVICE HEIGHTS SHALL BE VERIFIED WITH THE ARCHITECT PRIOR TO ROUGH-IN.
4. ALL FURNITURE FEED LOCATIONS TO BE VERIFIED WITH ARCHITECT AND FURNITURE VENDOR PRIOR TO ROUGH-IN.
5. ALL FURNITURE WHIPS SHALL BE TRIMMED TO REDUCE EXCESS WHIP LENGTH.
6. WHEN EXPOSED CEILINGS OR OPEN GRID CONDITIONS OCCUR, THE CONTRACTOR WILL NEED TO PROVIDE THE FOLLOWING ITEMS:
   a. ALL BRANCH CIRCUITS SHALL BE EMT.
   b. ALL BRANCH CIRCUITS SHALL BE ROUTED ORTHOGONALLY, NEATLY TRAINED, IN PARALLEL TO STRUCTURES OR DUCTWORK. THE TERM "TRAINED" MEANS ALL PARALLEL CONDUITS SHALL MAINTAIN THE SAME SPATIAL RELATIONSHIP WITH EACH OTHER FOR ENTIRE RUN TO INCLUDE RADIUS BENDS AND SWEEPS.
   c. VISUALLY OBJECTIONABLE BRANCH CIRCUITS WILL BE REROUTED AT THE REQUEST OF THE ARCHITECT AT NO ADDITIONAL COST.
7. EXPOSED CABLE/CONDUCTORS INSTALLED IN A PLENUM SPACE SHALL CONFORM TO NEC, OR CEC WHERE ADOPTED, ARTICLE 300.22(C).
8. PROVIDE G.F.C.I. TYPE RECEPTACLE(S) OR RECEPTACLE(S) PROTECTED BY A GFCI CIRCUIT BREAKER(S) WHEN RECEPTACLES ARE 50A OR LESS, 150V TO GROUND OR LESS AND ARE LOCATED WITHIN 6-FEET OF ANY SINK OR THERAPEUTIC TUB, LAUNDRY AREA, SERVING ANY DRINKING FOUNTAIN OR VENDING MACHINE, WITHIN ANY KITCHEN SPACE, LOCKER ROOM AREA, GARAGE AND BATHROOM SPACE AND/OR LOCATED OUTDOORS. WHERE RECEPTACLES ARE NOT READILY ACCESSIBLE, PROVIDE GFCI CIRCUIT BREAKER(S) TO PROTECT THE RESPECTIVE BRANCH CIRCUIT AND PROVIDE ADDITIONAL NEUTRAL CONDUCTORS IN THE BRANCH CIRCUITING AS REQUIRED TO ENSURE PROPER GFCI FUNCTION.
9. PROVIDE OCCUPANCY SENSOR/LIGHTING CONTROL SYSTEM CONTROLLED RECEPTACLE RELAY(S) AS REQUIRED TO SWITCH CONTROLLED RECEPTACLES. CONNECT BRANCH CIRCUITRY AND CONTROL WIRING AS REQUIRED TO ALLOW OCCUPANCY SENSOR/LIGHTING CONTROL SYSTEM RELAY TO SWITCH STANDALONE AND/OR SYSTEMS FURNITURE CONTROLLED RECEPTACLES AS INDICATED ON PLANS. PROVIDE ADDITIONAL CONDUIT, WIRING AND PATHWAYS NECESSARY TO CONNECT BRANCH CIRCUITRY AND CONTROL WIRING TO REMOTE RELAYS TO INCLUDE RELAY(S) LOCATED ON ALTERNATE FLOORS, IN ELECTRICAL ROOMS, ETC.
10. PROVIDE ADDITIONAL J-BOX NEAR PANEL FOR MULTIPLE HOMERUN CIRCUITRY.
11. UNLESS SPECIFICALLY SHOWN AS (E), (R), (ER), (D), EXISTING OR NON-BOLD, ALL ELECTRICAL DEVICES SHOWN ARE NEW.

TELECOMMUNICATION AND SIGNAL SYSTEMS PATHWAYS & GENERAL NOTES:

1. CONDUITS SHALL (a) CONTAIN NO CONTINUOUS SECTIONS LONGER THAN 30M (98 FT.), AND (b) CONTAIN NO MORE THAN (2) 90° BENDS OR (1) REVERSE BEND WITHOUT INSTALLING A PULL BOX. SPLIT CONDUITS IN PLACE OF PULL BOXES ARE UNACCEPTABLE.
2. CONDUITS SHALL CONTAIN PLASTIC OR NYLON PULL TAPE RATED AT 200 LBS. WITH A MINIMUM OF 5 FEET OF EXTRA PULL TAPE COILED AT EACH END.
3. CONDUIT BEND RADIUS SHALL BE (a) A MINIMUM OF 6 TIMES THE INTERNAL CONDUIT DIAMETER FOR CONDUITS 2-INCHES IN DIAMETER OR LESS, AND (b) 10 TIMES THE INTERNAL CONDUIT DIAMETER FOR CONDUITS MORE THAN 2-INCHES IN DIAMETER.
4. TERMINATE CONDUIT STUBS AND SLEEVES THAT PROTRUDE THROUGH STRUCTURAL FLOORS 2-INCHES TO 3-INCHES ABOVE THE FLOOR SURFACE.
5. INSTALL BUSHINGS OR BELL ENDS AS REQUIRED ON ALL CONDUITS.
6. FLEX CONDUIT IS UNACCEPTABLE FOR USE AS A COMMUNICATIONS CONDUIT EXCEPT AT SEISMIC JOINTS AND/OR IF APPROVED IN WRITING BY THE ENGINEER.
7. ALL UNDER SLAB OR IN-SLAB CONDUITS SHALL BE INSTALLED IN A MANNER THAT PREVENTS WATER INFILTRATION OF THE CONDUIT. IT IS THE CONTRACTOR'S RESPONSIBILITY TO ENSURE GROUND WATER, RAIN WATER OR CONSTRUCTION WATER IS PREVENTED FROM ENTERING AND/OR REMOVED FROM THE CONDUITS PRIOR TO PLACEMENT OF COMMUNICATIONS CABLES. SEE ELECTRICAL SPECIFICATIONS, DETAILS AND PLANS FOR ADDITIONAL CONDUIT SEALING REQUIREMENTS.
8. WHERE OPEN CEILINGS OCCUR CONDUCTORS SHALL BE INSTALLED INSIDE RACEWAY (CONDUIT). PROVIDE ALL RACEWAY, CONDUITS AND CONDUIT SLEEVES WHETHER OR NOT SHOWN ON THE PLAN DRAWINGS. THIS APPLIES TO ALL LOW VOLTAGE AND SIGNAL SYSTEMS CONDUCTORS INCLUDING DATA, TELEPHONE, SECURITY, PUBLIC ADDRESS, CLOCKS, AUDIO VISUAL, CATV, SURVEILLANCE CAMERAS, FIRE ALARM, BMS/EMS, ETCETERA. INCLUDE ALL COSTS IN BASE BID.
9. WHERE INACCESSIBLE CEILINGS OCCUR CONDUCTORS SHALL BE INSTALLED INSIDE CONDUIT RACEWAY. PROVIDE ALL CONDUITS AND CONDUIT SLEEVES WHETHER OR NOT SHOWN ON THE PLAN DRAWINGS. THIS APPLIES TO ALL LOW VOLTAGE AND SIGNAL SYSTEMS CONDUCTORS INCLUDING DATA, TELEPHONE, SECURITY, PUBLIC ADDRESS, CLOCKS, AUDIO VISUAL, CATV, SURVEILLANCE CAMERAS, FIRE ALARM, BMS/EMS, ETCETERA. INCLUDE ALL COSTS IN BASE BID.
10. PROVIDE ANY AND ALL CONDUIT SLEEVES AS MAY BE REQUIRED WHENEVER LOW VOLTAGE CONDUCTORS PASS THROUGH AN INTERIOR OR EXTERIOR WALL, FLOOR, OR ANY STRUCTURAL ASSEMBLY. PROPERLY FIRE STOP ALL PENETRATIONS THROUGH FIRE RATED ASSEMBLIES PER THE NEC AND ELECTRICAL SPECIFICATIONS. INCLUDE ALL COSTS IN BASE BID.
11. PROVIDE SOUND STOP MATERIAL FOR ALL CONDUIT PENETRATIONS IN SOUND RATED WALL ASSEMBLIES.
12. ALL PULL BOXES SHALL BE SIZED AND INSTALLED PER ANSI-TIA-569-C. PULL BOXES FOR IN/UNDER SLAB CONDUIT RUNS ARE NOT PERMITTED UNLESS OTHERWISE NOTED. PULL BOXES FOR OVERHEAD CONDUIT RUNS SHALL BE LOCATED ABOVE ACCESSIBLE CEILINGS WITHIN THE ACCESSIBLE CEILING SPACE AND SUPPORTED INDEPENDENTLY FROM THE STRUCTURE AND CONDUIT SUPPORTS. PULL BOXES FOR ROOF MOUNTED OR EXTERIOR ABOVE GRADE APPLICATIONS SHALL BE NEMA 3R RATED. PULL BOXES SHALL BE SIZED ACCORDING TO THE FOLLOWING:

CONDUIT SIZE	WIDTH	LENGTH	DEPTH	WIDTH INCREASE PER ADDITIONAL CONDUIT
1"	4"	16"	3"	2"
2"	8"	36"	4"	5"
3"	12"	48"	5"	6"
4"	15"	60"	8"	8"

FOR OTHER CONDUIT SIZES REFER TO ANSI/TIA-569-C TABLE 12. - LATEST PUBLISHED EDITION.

13. CONDUIT(S) SHALL EXIT A PULL BOX ON THE WALL OPPOSITE THE WALL ENTERED.
14. ALL PULL BOXES INSTALLED ON TOP OF ROOFS OR ATTACHED TO CANOPIES SHALL BE RATED NEMA-3R OR NEMA-4. PROVIDE QUANTITY AND SIZE OF PULL BOXES AS REQUIRED TO COMPLY WITH THESE GENERAL PATHWAY NOTES. PAINT BOXES TO MATCH SURROUNDING SURFACES.
15. ALL CONDUITS INSTALLED ON EXTERIOR OF BUILDINGS AND CANOPIES SHALL BE GALVANIZED. PAINT ALL CONDUITS TO MATCH SURROUNDING SURFACES.
16. PROVIDE LABELING OF EACH CONDUIT PER GENERAL ELECTRICAL SPECIFICATIONS.
17. PROVIDE INTERNAL/EXTERNAL GAS AND WATER TIGHT MECHANICAL SEALING/PLUGGING OF EACH UNDERGROUND BUILDING ENTRY CONDUIT AS SPECIFIED ELSEWHERE IN THE DRAWINGS AND SPECIFICATIONS.
18. ALL CONDUITS EXPOSED TO VIEW (I.E.: OPEN CEILING SPACES) SHALL BE PAINTED TO MATCH SURROUNDING SURFACES. CONDUITS INSTALLED ABOVE HARD CEILINGS OR INACCESSIBLE CEILINGS ARE EXEMPT FROM PAINTING.
19. ELECTRICAL CONTRACTOR SHALL REFERENCE ALL E-SERIES, T-SERIES AND AV-SERIES SHEETS FOR ADDITIONAL CONDUIT REQUIREMENTS.

Copyright © 2025
All ideas, designs, arrangements and plans indicated or represented by this drawing are owned by, and the property of, NICHOLS, MELBURG and ROSSETTO and were created, evolved and developed for use on, and in conjunction with, the specified project. None of such ideas, designs, arrangements or plans shall be used by, or disclosed to any person, firm or corporation for any purpose whatsoever without the written permission of NICHOLS, MELBURG and ROSSETTO.

NICHOLS MELBURG ROSSETTO
ARCHITECTS + ENGINEERS
300 KNOLLCREST DRIVE
REDDING, CA. 96002
(530) 222-3300 (530) 222-3538 FAX
http://www.nmrdesign.com

CONSULTANTS

tk1sc
Member of WSP
11870 Pierce Street, Suite 160
Riverside, California 92505
951.299.4160 www.tk1sc.com
Project Leader - Jerry Leonhardt
Electrical Lead - Jerry Leonhardt
WSP Job #: B2305166.000

LICENSE STAMPS

REGISTERED PROFESSIONAL ENGINEER RAYMOND W. SWARTZ No. E15610 Exp. 12/31/2025 ELECTRICAL STATE OF CALIFORNIA

PROJECT NAME

TEHAMA COUNTY CORNING VETERAN'S HALL

1620 SOLANO ST.
CORNING, CA

SHEET TITLE

POWER & COMMUNICATIONS PLAN - LEVEL 1

DRAWING STATUS

CONSTRUCTION DOCUMENTS

REVISIONS

Sym.	Description	Date

Drawn By	
Date Issued	2/13/2025
Scale	1/8" = 1'-0"
Project No.	21-6497

SHEET No.

E2.5

Login Name: USGL700366
Plot Date: February 13, 2025 - 9:26 am
File Name: P:\2023\B2305166.000 Corning Veterans Hall Remod\Drawings and Models\CAD\Electrical\E2-5.dwg
XREFS: x-CVH_Title Block ; x-CVH-flr1 ; x-CVH-GRID

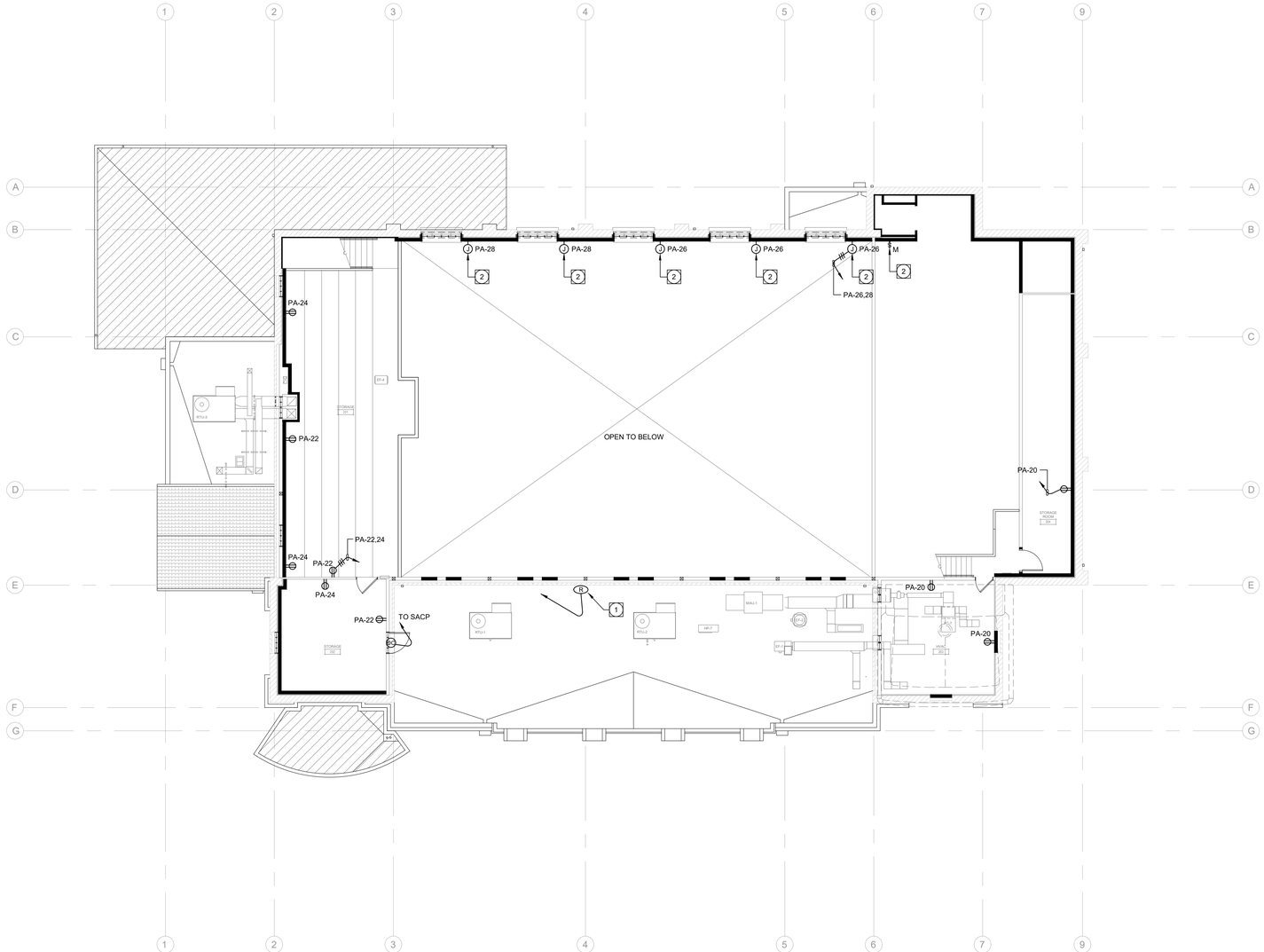

POWER AND COMMUNICATIONS PLAN - LEVEL 2

SCALE: 1/8" = 1'-0"

PLAN NOTES:

1. EXISTING WIRELESS RECEIVER WITH CONDUCTORS. CONTRACTOR SHALL CONFIRM EXACT LOCATION IN FIELD. SHOWN HERE FOR REFERENCE. REMOVE AND PROTECTED DURING DEMOLITION PHASE, AND REINSTALL IN CONSTRUCTION PHASE. CONTRACTOR SHALL RECONNECT DEVICE CABLING OR PROVIDE NEW CABLING AS MAY BE REQUIRED TO REESTABLISH CONNECTIVITY AND FUNCTIONALITY.

2. CONNECT TO MOTORIZED SHADES AS REQUIRED. PROVIDE ALL J-BOXES, LOW VOLTAGE AND LINE VOLTAGE CONTROLS, CONDUIT, CONDUCTORS, SIZED AND INSTALLED PER MOTORIZED SHADE MANUFACTURER'S REQUIREMENTS FOR A COMPLETE AND OPERABLE MOTORIZED SHADE SYSTEM. COORDINATE INSTALLATION REQUIREMENTS WITH SHADE INSTALLER PRIOR TO ROUGH-IN. INCLUDE ALL COSTS IN BASE BID. SEE DETAIL 7/E5.0 FOR ADDITIONAL INFORMATION.

POWER PLAN GENERAL NOTES:

1. ALL RECEPTACLES ON COMMON WALLS SHALL BE SEPARATE BOXES AND OFFSET 24-INCHES MINIMUM.

2. ALL PENETRATIONS THROUGH FIRE RATED WALLS SHALL BE PROTECTED FROM THE SPREAD OF FIRE WITH AN APPROVED FIRESTOP SYSTEM EQUAL OR GREATER THAN THE FIRE RATING OF THE WALL.

3. ALL WALL-MOUNTED DEVICE HEIGHTS SHALL BE VERIFIED WITH THE ARCHITECT PRIOR TO ROUGH-IN.

4. ALL FURNITURE FEED LOCATIONS TO BE VERIFIED WITH ARCHITECT AND FURNITURE VENDOR PRIOR TO ROUGH-IN.

5. ALL FURNITURE WHIPS SHALL BE TRIMMED TO REDUCE EXCESS WHIP LENGTH.

6. WHEN EXPOSED CEILINGS OR OPEN GRID CONDITIONS OCCUR, THE CONTRACTOR WILL NEED TO PROVIDE THE FOLLOWING ITEMS:
   a. ALL BRANCH CIRCUITS SHALL BE EMT.
   b. ALL BRANCH CIRCUITS SHALL BE ROUTED ORTHOGONALLY, NEATLY TRAINED, IN PARALLEL TO STRUCTURES OR DUCTWORK. THE TERM "TRAINED" MEANS ALL PARALLEL CONDUITS SHALL MAINTAIN THE SAME SPATIAL RELATIONSHIP WITH EACH OTHER FOR ENTIRE RUN TO INCLUDE RADIUS BENDS AND SWEEPS.
   c. VISUALLY OBJECTIONABLE BRANCH CIRCUITS WILL BE REROUTED AT THE REQUEST OF THE ARCHITECT AT NO ADDITIONAL COST.

7. EXPOSED CABLE/CONDUCTORS INSTALLED IN A PLENUM SPACE SHALL CONFORM TO NEC, OR CEC WHERE ADOPTED, ARTICLE 300.22(C).

8. PROVIDE G.F.C.I. TYPE RECEPTACLE(S) OR RECEPTACLE(S) PROTECTED BY A GFCI CIRCUIT BREAKER(S) WHEN RECEPTACLES ARE 50A OR LESS, 150V TO GROUND OR LESS AND ARE LOCATED WITHIN 6-FEET OF ANY SINK OR THERAPEUTIC TUB, LAUNDRY AREA, SERVING ANY DRINKING FOUNTAIN OR VENDING MACHINE, WITHIN ANY KITCHEN SPACE, LOCKER ROOM AREA, GARAGE AND BATHROOM SPACE AND/OR LOCATED OUTDOORS. WHERE RECEPTACLES ARE NOT READILY ACCESSIBLE, PROVIDE GFCI CIRCUIT BREAKER(S) TO PROTECT THE RESPECTIVE BRANCH CIRCUIT AND PROVIDE ADDITIONAL NEUTRAL CONDUCTORS IN THE BRANCH CIRCUITING AS REQUIRED TO ENSURE PROPER GFCI FUNCTION.

9. PROVIDE OCCUPANCY SENSOR/LIGHTING CONTROL SYSTEM CONTROLLED RECEPTACLE RELAY(S) AS REQUIRED TO SWITCH CONTROLLED RECEPTACLES. CONNECT BRANCH CIRCUITRY AND CONTROL WIRING AS REQUIRED TO ALLOW OCCUPANCY SENSOR/LIGHTING CONTROL SYSTEM RELAY TO SWITCH STANDALONE AND/OR SYSTEMS FURNITURE CONTROLLED RECEPTACLES AS INDICATED ON PLANS. PROVIDE ADDITIONAL CONDUIT, WIRING AND PATHWAYS NECESSARY TO CONNECT BRANCH CIRCUITRY AND CONTROL WIRING TO REMOTE RELAYS TO INCLUDE RELAY(S) LOCATED ON ALTERNATE FLOORS, IN ELECTRICAL ROOMS, ETC.

10. PROVIDE ADDITIONAL J-BOX NEAR PANEL FOR MULTIPLE HOMERUN CIRCUITRY.

11. UNLESS SPECIFICALLY SHOWN AS (E), (R), (ER), (D), EXISTING OR NON-BOLD, ALL ELECTRICAL DEVICES SHOWN ARE NEW.

12. PROVIDE REDUNDANT GROUND PATH IN ALL BRANCH CIRCUITS SERVING PATIENT CARE AREAS CONSISTING OF A SEPARATE, INSULATED EQUIPMENT GROUNDING CONDUCTOR PER NEC, OR CEC WHERE ADOPTED, ART 517.13.

COMMUNICATIONS PATHWAYS GENERAL NOTES:

1. CONDUITS SHALL (a) CONTAIN NO CONTINUOUS SECTIONS LONGER THAN 30M (98 FT.), AND (b) CONTAIN NO MORE THAN (2) 90° BENDS OR (1) REVERSE BEND WITHOUT INSTALLING A PULL BOX. SPLIT CONDUITS IN PLACE OF PULL BOXES ARE UNACCEPTABLE.

2. CONDUITS SHALL CONTAIN PLASTIC OR NYLON PULL TAPE RATED AT 200 LBS. WITH A MINIMUM OF 5 FEET OF EXTRA PULL TAPE COILED AT EACH END.

3. CONDUIT BEND RADIUS SHALL BE (a) A MINIMUM OF 6 TIMES THE INTERNAL CONDUIT DIAMETER FOR CONDUITS 2-INCHES IN DIAMETER OR LESS, AND (b) 10 TIMES THE INTERNAL CONDUIT DIAMETER FOR CONDUITS MORE THAN 2-INCHES IN DIAMETER.

4. TERMINATE CONDUIT STUBS AND SLEEVES THAT PROTRUDE THROUGH STRUCTURAL FLOORS 2-INCHES TO 3-INCHES ABOVE THE FLOOR SURFACE.

5. INSTALL BUSHINGS OR BELL ENDS AS REQUIRED ON ALL CONDUITS.

6. FLEX CONDUIT IS UNACCEPTABLE FOR USE AS A COMMUNICATIONS CONDUIT EXCEPT AT SEISMIC JOINTS AND/OR IF APPROVED IN WRITING BY THE ENGINEER.

7. ALL UNDER SLAB OR IN-SLAB CONDUITS SHALL BE INSTALLED IN A MANNER THAT PREVENTS WATER INFILTRATION OF THE CONDUIT. IT IS THE CONTRACTOR'S RESPONSIBILITY TO ENSURE GROUND WATER, RAIN WATER OR CONSTRUCTION WATER IS PREVENTED FROM ENTERING AND/OR REMOVED FROM THE CONDUITS PRIOR TO PLACEMENT OF COMMUNICATIONS CABLES. SEE ELECTRICAL SPECIFICATIONS, DETAILS AND PLANS FOR ADDITIONAL CONDUIT SEALING REQUIREMENTS.

8. ALL PULL BOXES SHALL BE SIZED AND INSTALLED PER ANSI-TIA-569-C. PULL BOXES FOR IN/UNDER SLAB CONDUIT RUNS ARE NOT PERMITTED UNLESS OTHERWISE NOTED. PULL BOXES FOR OVERHEAD CONDUIT RUNS SHALL BE LOCATED ABOVE ACCESSIBLE CEILINGS WITHIN THE ACCESSIBLE CEILING SPACE AND SUPPORTED INDEPENDENTLY FROM THE STRUCTURE AND CONDUIT SUPPORTS. PULL BOXES FOR ROOF MOUNTED OR EXTERIOR ABOVE GRADE APPLICATIONS SHALL BE NEMA 3R RATED. PULL BOXES SHALL BE SIZED ACCORDING TO THE FOLLOWING:

CONDUIT SIZE	WIDTH	LENGTH	DEPTH	WIDTH INCREASE PER ADDITIONAL CONDUIT
1"	4"	16"	3"	2"
2"	8"	36"	4"	5"
3"	12"	48"	5"	6"
4"	15"	60"	8"	8"

FOR OTHER CONDUIT SIZES REFER TO ANSI/TIA-569-C TABLE 12. - LATEST PUBLISHED EDITION.

9. CONDUIT(S) SHALL EXIT A PULL BOX ON THE WALL OPPOSITE THE WALL ENTERED.

10. PROVIDE LABELING OF EACH CONDUIT PER GENERAL ELECTRICAL SPECIFICATIONS.

11. PROVIDE INTERNAL/EXTERNAL GAS AND WATER TIGHT MECHANICAL SEALING/PLUGGING OF EACH BUILDING ENTRY CONDUIT AS SPECIFIED ELSEWHERE IN THE DRAWINGS AND SPECIFICATIONS.

Copyright © 2025

All ideas, designs, arrangements and plans indicated or represented by this drawing are owned by, and the property of, NICHOLS, MELBURG and ROSSETTO and were created, evolved and developed for use on, and in conjunction with, the specified project. None of such ideas, designs, arrangements and plans shall be used by or disclosed to any person, firm or corporation for any purpose whatsoever without the written permission of NICHOLS, MELBURG and ROSSETTO.

NICHOLS MELBURG & ROSSETTO
ARCHITECTS + ENGINEERS

300 KNOLLCREST DRIVE
REDDING, CA. 96002
(530) 222-3300 (530) 222-3538 FAX
http://www.nmrdesign.com

CONSULTANTS

tk1sc
Member of WSP

11870 Pierce Street, Suite 160
Riverside, California 92505
951.299.4160 www.tk1sc.com

Project Leader - Jerry Leonhardt
Electrical Lead - Jerry Leonhardt
WSP Job #: B2305166.000

LICENSE STAMPS

REGISTERED PROFESSIONAL ENGINEER
RICHARD W. SHAFFER
No. E15610
12/31/2025
ELECTRICAL
STATE OF CALIFORNIA

PROJECT NAME

TEHAMA COUNTY
CORNING
VETERAN'S HALL

1820 SOLANO ST.
CORNING, CA

SHEET TITLE

POWER & COMMUNICATIONS PLAN - LEVEL 2

DRAWING STATUS

CONSTRUCTION DOCUMENTS

REVISIONS

Sym.	Description	Date

Drawn By	
Date Issued	2/13/2025
Scale	1/8" = 1'-0"
Project No.	21-6497

SHEET No.

E2.6

Login Name: USG_70096
Plot Date: February 13, 2025 - 9:27 am
File Name: P:\2021\B2305166\00 Corning Veterans Hall Remod\Drawings and Models\CAD\Electrical\E2-6.dwg
XREFS: x-CHLL-file Base; x-CHVAE-1; x-CHVAE2

MOTORIZED EQUIPMENT SCHEDULE

ITEM	DESCRIPTION	EQUIPMENT RATING: MOTOR VOLTS	MOTOR PH.	MOTOR HP	MOTOR FLA	VFD FLA	MCA	MOCP	SCCR	DISC. SW. SIZE STARTER SIZE	CIRCUIT DATA CONDUIT - WIRE	SPECIFIC NOTES
EF 3	EXHAUST FAN -	115	1	-	1.5	-	1.88	15	-	MOTOR RATED SWITCH	3/4"C. - 2#12, 1#12 GRD. -	-
FC 1	INDOOR FAN COIL -	208	1	-	6.88	-	8.6	15	-	MOTOR RATED SWITCH	3/4"C. - 2#12, 1#12 GRD. -	-
FC 2	INDOOR FAN COIL -	208	1	-	6.88	-	8.6	15	-	MOTOR RATED SWITCH	3/4"C. - 2#12, 1#12 GRD. -	-
FC 3	INDOOR FAN COIL -	208	1	-	6.88	-	8.6	15	-	MOTOR RATED SWITCH	3/4"C. - 2#12, 1#12 GRD. -	-
FC 4	INDOOR FAN COIL -	208	1	-	6.88	-	8.6	15	-	MOTOR RATED SWITCH	3/4"C. - 2#12, 1#12 GRD. -	-
FC 5	INDOOR FAN COIL -	208	1	-	6.88	-	8.6	15	-	MOTOR RATED SWITCH	3/4"C. - 2#12, 1#12 GRD. -	-
FC 6	INDOOR FAN COIL -	208	1	-	6.88	-	8.6	15	-	MOTOR RATED SWITCH	3/4"C. - 2#12, 1#12 GRD. -	-
FC HEAT	FAN COIL OPTIONAL HEATER (TYP.)	208	1	-	39.1	-	48.8	50	-	60AS -	3/4"C. 2#6, 1#10 GRD. -	A
- -	- -	-	-	-	-	-	-	-	-	- -	- -	-
- -	- -	-	-	-	-	-	-	-	-	- -	- -	-
- -	- -	-	-	-	-	-	-	-	-	- -	- -	-
- -	- -	-	-	-	-	-	-	-	-	- -	- -	-
- -	- -	-	-	-	-	-	-	-	-	- -	- -	-

MOTORIZED EQUIPMENT SCHEDULE SPECIFIC NOTES:

A. FUSED AS RECOMMENDED BY MANUFACTURER.

B. MAGNETIC MOTOR STARTER WITH CONTROL TRANSFORMER, AUXILIARY CONTACTS, INDICATOR LIGHT AND H.O.A. SWITCH. VERIFY CONTROL TRANSFORMER VOLTAGE WITH M.C. PRIOR TO ORDERING MATERIAL.

C. ROUTE THROUGH LINE VOLTAGE CONTROL. SEE MECHANICAL AND/OR PLUMBING PLANS FOR ADDITIONAL REQUIREMENTS.

D. VERIFY LOCATION WITH PLUMBING PLANS PRIOR TO ROUGH-IN. CONNECT TO AQUASTAT AND TIME CLOCK AS REQUIRED.

E. REMOTE VFD. PROVIDE EARLY BREAK CONTACTS ON ANY DISCONNECT SWITCHES REQUIRED BY CODE OR SHOWN ON PLANS THAT ARE DOWNSTREAM OF THE REMOTE VFD. PROVIDE CONDUIT AND CONDUCTORS AS REQUIRED TO INTERCONNECT THE CONTACT WITH VFD "ENABLE" TERMINALS. REFER TO MECHANICAL AND/OR PLUMBING PLANS FOR LOCATION. PROVIDE FEEDER(S) TO CONNECT REMOTE VFD AND MOTOR(S) AS REQUIRED.

F. INTEGRAL VFD PROVIDED WITH EQUIPMENT. REFER TO MECHANICAL AND/OR PLUMBING PLANS FOR LOCATION. CONNECT TO VFD AS REQUIRED.

G. INTEGRAL DISCONNECT PROVIDED WITH EQUIPMENT. REFER TO MECHANICAL AND/OR PLUMBING PLANS FOR LOCATION. CONNECT TO INTEGRAL DISCONNECT AS REQUIRED.

H. INTEGRAL DISCONNECT PROVIDED WITH VFD. REFER TO MECHANICAL AND/OR PLUMBING PLANS FOR LOCATION. CONNECT TO INTEGRAL DISCONNECT AS REQUIRED.

J. ROUTE 1 PHASE CONDUCTOR OF EACH UPS ROOM/DATA ROOM EXHAUST FAN BRANCH CIRCUIT THROUGH/AROUND A DEDICATED, CURRENT-OPERATED LOAD MONITORING SWITCH THAT DETECTS OVERLOADS AND UNDERLOADS (INCLUDING FAN BELT BREAKAGE) WITHIN +/- 15 PERCENT OF AVERAGE CURRENT DRAW. LOCATE IN BARRIERED PULL BOX - NEMA 3R FOR WET LOCATIONS - AND CONNECT N.O. CONTACT TO FIRE ALARM MONITORING MODULE (SUPERVISORY SIGNAL). LOCATE PULL BOX WITH DEVICES INDOORS WHERE POSSIBLE AND ADJACENT TO THE SERVING ELECTRICAL DISTRIBUTION EQUIPMENT. PROVIDE LABEL "USPA BATTERY EX. FAN MONITOR" PER LABELING SPECIFICATIONS. (NK TECHNOLOGIES #ASM-NOU-OU-FT - www.nktechnologies.com).

K. ROUTE THROUGH LINE VOLTAGE CONTROL FOR KITCHEN HOOD FIRE SUPPRESSION SYSTEM. SEE MECHANICAL, FIRE ALARM AND FOOD SERVICE PLANS FOR ADDITIONAL REQUIREMENTS.

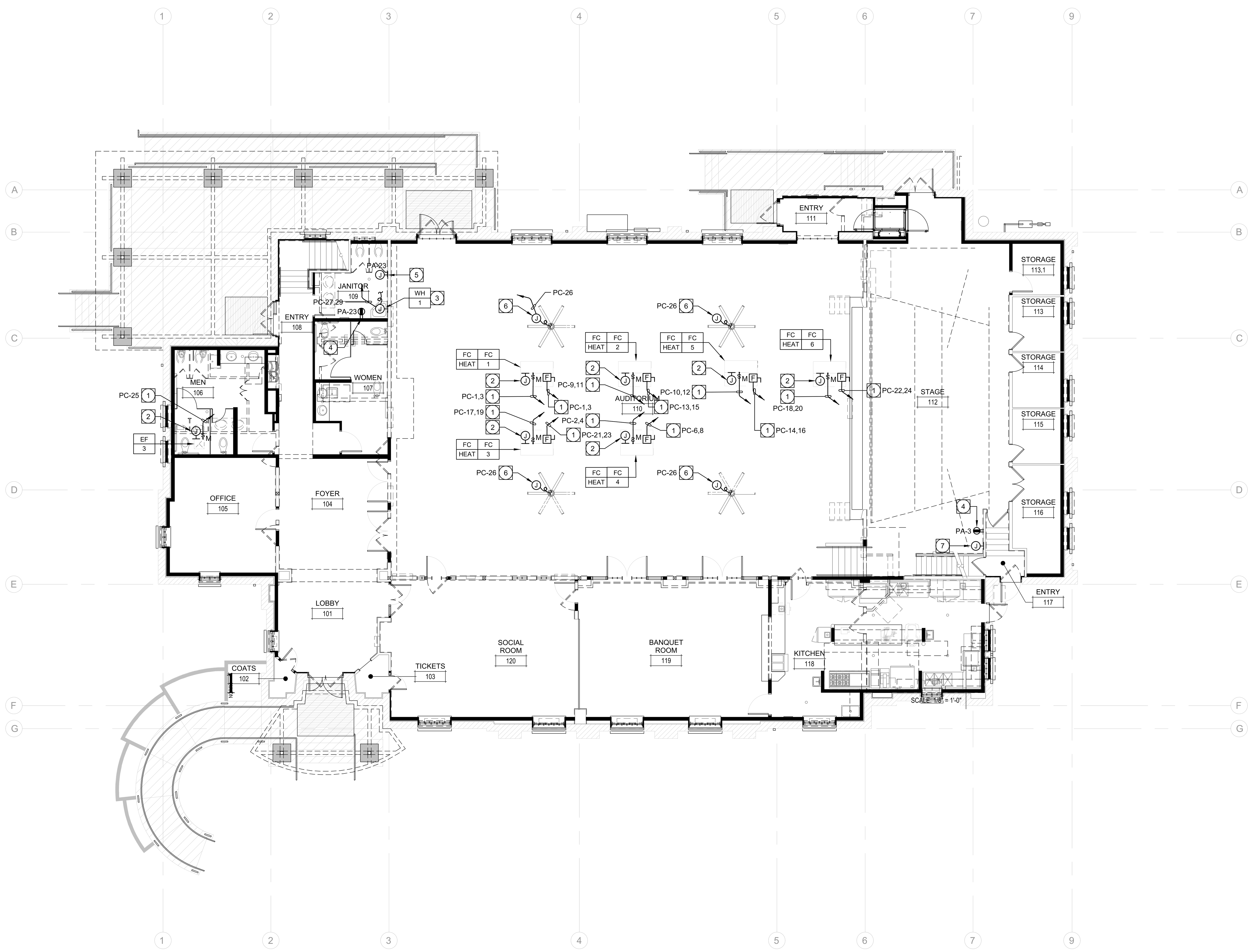

MECHANICAL POWER PLAN - LEVEL 1

PLAN NOTES:

1. REFER TO MOTORIZED EQUIPMENT SCHEDULE FOR MOTOR FEEDER/ BRANCH CIRCUIT INFORMATION.
2. PROVIDE 3/4" C.O.(S) TO RESPECTIVE CONTROL DEVICE(S) FOR CONTROL WIRING. REFER TO THE EQUIPMENT CONTROL WIRING DIAGRAMS FOR ADDITIONAL INFORMATION.
3. CONNECT COMPLETE TO WATER HEATER AS REQUIRED. COORDINATE LOCATION WITH PLUMBING CONTRACTOR PRIOR TO ROUGH-IN. PROVIDE 3/4"C. 2#10, 1#10 GRD.
4. CONNECT CIRCULATION PUMP, TIME CLOCK AND/OR AQUASTAT AS REQUIRED. SEE PLUMBING PLANS FOR MORE INFORMATION. COORDINATE LOCATION WITH PLUMBING CONTRACTOR PRIOR TO ROUGH-IN.
5. CONNECT AS REQUIRED TO MECHANICAL CONTROLLER. COORDINATE LOCATION WITH MECHANICAL/BAS CONTRACTOR PRIOR TO ROUGH-IN. REFER TO MECHANICAL PLANS FOR ADDITIONAL INFORMATION.
6. CONNECT AS REQUIRED TO CEILING FAN PER MANUFACTURER'S REQUIREMENTS.
7. RECONNECT EXISTING ELECTRIC WATER HEATER TO PANEL PA. PROVIDE NEW CONDUIT AND WIRING AS REQUIRED TO EXTEND EXISTING CIRCUITING TO NEW PANEL LOCATION. VERIFY CIRCUIT CONFIGURATION AND REQUIREMENTS IN FIELD.

MOTORIZED EQUIPMENT SCHEDULE GENERAL NOTES:

1. ALL BRANCH CIRCUIT DATA IS BASED UPON METALLIC CONDUITS. IF THE CONTRACTOR ELECTS TO USE NONMETALLIC CONDUITS, AN EQUIPMENT GROUNDING CONDUCTOR SHALL BE INSTALLED PER NEC, OR CEC WHERE ADOPTED, TABLE 250.122 AND THE CONDUIT SIZE SHALL BE INCREASED ACCORDINGLY.
2. ELECTRICAL CONTRACTOR SHALL REFER TO ALL DOCUMENTS RELATED TO THE EQUIPMENT (I.E. SHOP DRAWINGS, CONSTRUCTION DOCUMENTS, ETC.) IN REGARDS TO ELECTRICAL CHARACTERISTICS OF ALL EQUIPMENT LISTED IN THE SCHEDULE. ANY MODIFICATION AND/OR ADDITIONAL WORK NECESSARY SHALL BE INCLUDED IN THE BASE BID.
3. ELECTRICAL CONTRACTOR SHALL CHECK THE ROTATION OF ALL THREE PHASE MOTORS AND CORRECT THE ROTATION IF REVERSED.
4. ELECTRICAL CONTRACTOR SHALL PROVIDE FUSES SIZED PER THE EQUIPMENT NAMEPLATE INFORMATION.
5. DISCONNECT SWITCHES SHALL BE HEAVY DUTY TYPE, EXTERNALLY OPERATED, QUICK MAKE QUICK BREAK AND SHALL BE FUSIBLE OR NON FUSIBLE AS INDICATED. A MAXIMUM VOLTAGE, CURRENT AND HORSEPOWER SHALL BE CLEARLY MARKED ON SWITCH ENCLOSURE. SWITCHES HAVING DUAL RATINGS (HIGHER RATINGS WHEN USED WITH DUAL ELEMENT FUSES) SHALL HAVE RATINGS INDICATED ON METAL PLATES RIVETED OR OTHERWISE PERMANENTLY ATTACHED TO THE ENCLOSURE. WHEN INDICATED, TOGGLE SWITCHES SHALL BE MOTOR RATED FOR THE APPLICATION.
6. STARTERS SHALL BE FULL VOLTAGE, REDUCED VOLTAGE OR COMBINATION DISCONNECT AND STARTER, WITH CONTROL VOLTAGE AS REQUIRED, AS INDICATED ON THE DOCUMENTS RELATED TO THE EQUIPMENT, SUCH AS SHOP DRAWINGS, CONSTRUCTION DOCUMENTS, ETC. STARTERS SHALL INCLUDE MOTOR OVERLOAD PROTECTION, PHASE LOSS AND PHASE UNBALANCE PROTECTION AS REQUIRED.
7. ALL TERMINATIONS AND ENCLOSURES SHALL BE RATED FOR USE WITH 75 DEGREE C CONDUCTORS.
8. COMPLETE INSTALLATION SHALL CONFORM TO THE REQUIREMENTS OF NEC (OR CEC WHERE ADOPTED) ARTICLES 430 AND 440.
9. CONTRACTOR TO COORDINATE WITH ALL OTHER PROJECT TRADES AND WITH OWNER/ TENANT FOR TO OBTAIN RESPECTIVE EQUIPMENT SCCR AND PROVIDE APPROPRIATE PROTECTIVE DEVICES TO LIMIT AVAILABLE FAULT CURRENT TO LESS THAN THE EQUIPMENT NAMEPLATE SCCR PER NEC (OR CEC WHERE ADOPTED) 110.10. SEE POWER SYSTEM STUDY SPECIFICATIONS FOR ADDITIONAL REQUIREMENTS.
10. UNLESS OTHERWISE NOTED, MOCP VALUES FOR VFD-EQUIPPED DEVICE ARE SIZED PER NEC (OR CEC WHERE ADOPTED) 430.130(A).1. CONTRACTOR SHALL COORDINATE WITH ALL OTHER PROJECT TRADES AND WITH OWNER/ TENANT (IF PROVIDING EQUIPMENT ON PROJECT) TO OBTAIN NAMEPLATE VFD-EQUIPPED DEVICE MOCP VALUE FROM MANUFACTURER INSTALLATION INSTRUCTIONS AND PROVIDE APPROPRIATE PROTECTIVE DEVICES TO COMPLY WITH NEC (OR CEC WHERE ADOPTED) 430.130(A).2.

POWER PLAN GENERAL NOTES:

1. ALL RECEPTACLES ON COMMON WALLS SHALL BE SEPARATE BOXES AND OFFSET 24-INCHES MINIMUM.
2. ALL PENETRATIONS THROUGH FIRE RATED WALLS SHALL BE PROTECTED FROM THE SPREAD OF FIRE WITH AN APPROVED FIRESTOP SYSTEM EQUAL OR GREATER THAN THE FIRE RATING OF THE WALL.
3. ALL WALL-MOUNTED DEVICE HEIGHTS SHALL BE VERIFIED WITH THE ARCHITECT PRIOR TO ROUGH-IN.
4. ALL FURNITURE FEED LOCATIONS TO BE VERIFIED WITH ARCHITECT AND FURNITURE VENDOR PRIOR TO ROUGH-IN.
5. ALL FURNITURE WHIPS SHALL BE TRIMMED TO REDUCE EXCESS WHIP LENGTH.
6. WHEN EXPOSED CEILINGS OR OPEN GRID CONDITIONS OCCUR, THE CONTRACTOR WILL NEED TO PROVIDE THE FOLLOWING ITEMS:
   a. ALL BRANCH CIRCUITS SHALL BE EMT.
   b. ALL BRANCH CIRCUITS SHALL BE ROUTED ORTHOGONALLY, NEATLY TRAINED, IN PARALLEL TO STRUCTURES OR DUCTWORK. THE TERM "TRAINED" MEANS ALL PARALLEL CONDUITS SHALL MAINTAIN THE SAME SPATIAL RELATIONSHIP WITH EACH OTHER FOR ENTIRE RUN TO INCLUDE RADIUS BENDS AND SWEEPS.
   c. VISUALLY OBJECTIONABLE BRANCH CIRCUITS WILL BE REROUTED AT THE REQUEST OF THE ARCHITECT AT NO ADDITIONAL COST.
7. EXPOSED CABLE/CONDUCTORS INSTALLED IN A PLENUM SPACE SHALL CONFORM TO NEC, OR CEC WHERE ADOPTED, ARTICLE 300.22(C).
8. PROVIDE G.F.C.I. TYPE RECEPTACLE(S) OR RECEPTACLE(S) PROTECTED BY A GFCI CIRCUIT BREAKER(S) WHEN RECEPTACLES ARE 50A OR LESS, 150V TO GROUND OR LESS AND ARE LOCATED WITHIN 6-FEET OF ANY SINK OR THERAPEUTIC TUB, LAUNDRY AREA, SERVING ANY DRINKING FOUNTAIN OR VENDING MACHINE, WITHIN ANY KITCHEN SPACE, LOCKER ROOM AREA, GARAGE AND BATHROOM SPACE AND/OR LOCATED OUTDOORS. WHERE RECEPTACLES ARE NOT READILY ACCESSIBLE, PROVIDE GFCI CIRCUIT BREAKER(S) TO PROTECT THE RESPECTIVE BRANCH CIRCUIT AND PROVIDE ADDITIONAL NEUTRAL CONDUCTORS IN THE BRANCH CIRCUITING AS REQUIRED TO ENSURE PROPER GFCI FUNCTION.
9. PROVIDE OCCUPANCY SENSOR/LIGHTING CONTROL SYSTEM CONTROLLED RECEPTACLE RELAY(S) AS REQUIRED TO SWITCH CONTROLLED RECEPTACLES. CONNECT BRANCH CIRCUITRY AND CONTROL WIRING AS REQUIRED TO ALLOW OCCUPANCY SENSOR/LIGHTING CONTROL SYSTEM RELAY TO SWITCH STANDALONE AND/OR SYSTEMS FURNITURE CONTROLLED RECEPTACLES AS INDICATED ON PLANS. PROVIDE ADDITIONAL CONDUIT, WIRING AND PATHWAYS NECESSARY TO CONNECT BRANCH CIRCUITRY AND CONTROL WIRING TO REMOTE RELAYS TO INCLUDE RELAY(S) LOCATED ON ALTERNATE FLOORS, IN ELECTRICAL ROOMS, ETC.
10. PROVIDE ADDITIONAL J-BOX NEAR PANEL FOR MULTIPLE HOMERUN CIRCUITRY.
11. UNLESS SPECIFICALLY SHOWN AS (E), (R), (ER), (D), EXISTING OR NON-BOLD, ALL ELECTRICAL DEVICES SHOWN ARE NEW.
12. PROVIDE REDUNDANT GROUND PATH IN ALL BRANCH CIRCUITS SERVING PATIENT CARE AREAS CONSISTING OF A SEPARATE, INSULATED EQUIPMENT GROUNDING CONDUCTOR PER NEC, OR CEC WHERE ADOPTED, ART 517.13.

Copyright © 2025

All ideas, designs, arrangements and plans indicated or represented by this drawing are owned by, and the property of, NICHOLS, MELBURG and ROSSETTO and were created, evolved and developed for use on, and in conjunction with, the specified project. None of such ideas, designs, arrangements or plans shall be used by, or disclosed to any person, firm or corporation for any purpose whatsoever without the written permission of NICHOLS, MELBURG and ROSSETTO.

NICHOLS MELBURG & ROSSETTO
ARCHITECTS + ENGINEERS
300 KNOLLCREST DRIVE
REDDING, CA. 96002
(530) 222-3300 (530) 222-3538 FAX
http://www.nmrdesign.com

CONSULTANTS

tk1sc
Member of WSP
11870 Pierce Street, Suite 160
Riverside, California 92505
951.299.4160 www.tk1sc.com

Project Leader - Jerry Leonhardt
Electrical Lead - Jerry Leonhardt
WSP Job #: B2305166.000

LICENSE STAMPS

REGISTERED PROFESSIONAL ENGINEER RAYMOND W. SWARTZ No. E15610 Ex. 12/31/2025 ELECTRICAL STATE OF CALIFORNIA

PROJECT NAME

TEHAMA COUNTY CORNING VETERAN'S HALL

1620 SOLANO ST.
CORNING, CA

SHEET TITLE

MECHANICAL POWER PLAN - LEVEL 1

DRAWING STATUS

CONSTRUCTION DOCUMENTS

REVISIONS

Sym.	Description	Date

Drawn By	
Date Issued	2/13/2025
Scale	1/8" = 1'-0"
Project No.	21-6497

SHEET No.

E2.7

Login Name: USGL700366
Plot Date: February 13, 2025 - 9:28 am
File Name: P:\2023\B2305166.000 Corning Veterans Hall Remod\Drawings and Models\CAD\Electrical\E2-7.dwg
XREFS: x-CVH_Title Block ; x-CVH-flr1 ; x-CVH-GRID

MOTORIZED EQUIPMENT SCHEDULE

ITEM	DESCRIPTION	EQUIPMENT RATING								DISC. SW. SIZE STARTER SIZE	CIRCUIT DATA CONDUIT - WIRE	SPECIFIC NOTES
				MOTOR		VFD						
		VOLTS	PH.	HP	FLA	FLA	MCA	MOCP	SCCR			
EF 1	EXHAUST FAN -	208	3	1.5	4.4	-	5.5	15	-	30AS -	3/4"C. - 3#12, 1#12 GRD. -	A
EF 2	EXHAUST FAN -	115	1	-	1.5	-	1.88	15	-	MOTOR RATED SWITCH	3/4"C. - 2#12, 1#12 GRD. -	A
EF 4	EXHAUST FAN -	115	1	.25	2.85	-	3.56	15	-	MOTOR RATED SWITCH	3/4"C. - 2#12, 1#12 GRD. -	-
FC 7	INDOOR FAN COIL -	208	1	-	4.9	-	6.13	15	-	MOTOR RATED SWITCH	3/4"C. - 2#12, 1#12 GRD. -	-
HP 7	HEAT PUMP -	208	1	-	13.2	-	16.5	20	-	30AS -	3/4"C. - 2#12, 1#12 GRD. -	A
RTU 1	ROOFTOP UNIT -	208	3	-	33.6	-	42	45	-	60AS -	3/4"C. - 3#6, 1#10 GRD. -	-
RTU 2	ROOFTOP UNIT -	208	3	-	48	-	60	60	-	60AS -	1"C. - 3#4, 1#8 GRD. -	-
RTU 3	ROOFTOP UNIT -	208	3	-	48	-	60	60	-	60AS -	1"C. - 3#4, 1#8 GRD. -	-
MAU 1	MAKEUP AIR UNIT -	208	3	-	-	-	3.9	15	-	30AS -	3/4"C. - 3#12, 1#12 GRD. -	A
- -	- -	-	-	-	-	-	-	-	-	- -	- -	-
- -	- -	-	-	-	-	-	-	-	-	- -	- -	-
- -	- -	-	-	-	-	-	-	-	-	- -	- -	-
- -	- -	-	-	-	-	-	-	-	-	- -	- -	-

MOTORIZED EQUIPMENT SCHEDULE SPECIFIC NOTES:

A. FUSED AS RECOMMENDED BY MANUFACTURER.

B. MAGNETIC MOTOR STARTER WITH CONTROL TRANSFORMER, AUXILIARY CONTACTS, INDICATOR LIGHT AND H.O.A. SWITCH. VERIFY CONTROL TRANSFORMER VOLTAGE WITH M.C. PRIOR TO ORDERING MATERIAL.

C. ROUTE THROUGH LINE VOLTAGE CONTROL. SEE MECHANICAL AND/OR PLUMBING PLANS FOR ADDITIONAL REQUIREMENTS.

D. VERIFY LOCATION WITH PLUMBING PLANS PRIOR TO ROUGH-IN. CONNECT TO AQUASTAT AND TIME CLOCK AS REQUIRED.

E. REMOTE VFD. PROVIDE EARLY BREAK CONTACTS ON ANY DISCONNECT SWITCHES REQUIRED BY CODE OR SHOWN ON PLANS THAT ARE DOWNSTREAM OF THE REMOTE VFD. PROVIDE CONDUIT AND CONDUCTORS AS REQUIRED TO INTERCONNECT THE CONTACT WITH VFD "ENABLE" TERMINALS. REFER TO MECHANICAL AND/OR PLUMBING PLANS FOR LOCATION. PROVIDE FEEDER(S) TO CONNECT REMOTE VFD AND MOTOR(S) AS REQUIRED.

F. INTEGRAL VFD PROVIDED WITH EQUIPMENT. REFER TO MECHANICAL AND/OR PLUMBING PLANS FOR LOCATION. CONNECT TO VFD AS REQUIRED.

G. INTEGRAL DISCONNECT PROVIDED WITH EQUIPMENT. REFER TO MECHANICAL AND/OR PLUMBING PLANS FOR LOCATION. CONNECT TO INTEGRAL DISCONNECT AS REQUIRED.

H. INTEGRAL DISCONNECT PROVIDED WITH VFD. REFER TO MECHANICAL AND/OR PLUMBING PLANS FOR LOCATION. CONNECT TO INTEGRAL DISCONNECT AS REQUIRED.

J. ROUTE 1 PHASE CONDUCTOR OF EACH UPS ROOM/DATA ROOM EXHAUST FAN BRANCH CIRCUIT THROUGH/AROUND A DEDICATED, CURRENT-OPERATED LOAD MONITORING SWITCH THAT DETECTS OVERLOADS AND UNDERLOADS (INCLUDING FAN BELT BREAKAGE) WITHIN +/- 15 PERCENT OF AVERAGE CURRENT DRAW. LOCATE IN BARRIERED PULL BOX - NEMA 3R FOR WET LOCATIONS - AND CONNECT N.O. CONTACT TO FIRE ALARM MONITORING MODULE (SUPERVISORY SIGNAL). LOCATE PULL BOX WITH DEVICES INDOORS WHERE POSSIBLE AND ADJACENT TO THE SERVING ELECTRICAL DISTRIBUTION EQUIPMENT. PROVIDE LABEL "USPA BATTERY EX. FAN MONITOR" PER LABELING SPECIFICATIONS. (NK TECHNOLOGIES #ASM-NOU-OU-FT - www.nktechnologies.com).

K. ROUTE THROUGH LINE VOLTAGE CONTROL FOR KITCHEN HOOD FIRE SUPPRESSION SYSTEM. SEE MECHANICAL, FIRE ALARM AND FOOD SERVICE PLANS FOR ADDITIONAL REQUIREMENTS.

PLAN NOTES:

1. REFER TO MOTORIZED EQUIPMENT SCHEDULE FOR MOTOR FEEDER/ BRANCH CIRCUIT INFORMATION.
2. PROVIDE 3/4" C.O.(S) TO RESPECTIVE CONTROL DEVICE(S) FOR CONTROL WIRING. REFER TO THE EQUIPMENT CONTROL WIRING DIAGRAMS FOR ADDITIONAL INFORMATION.

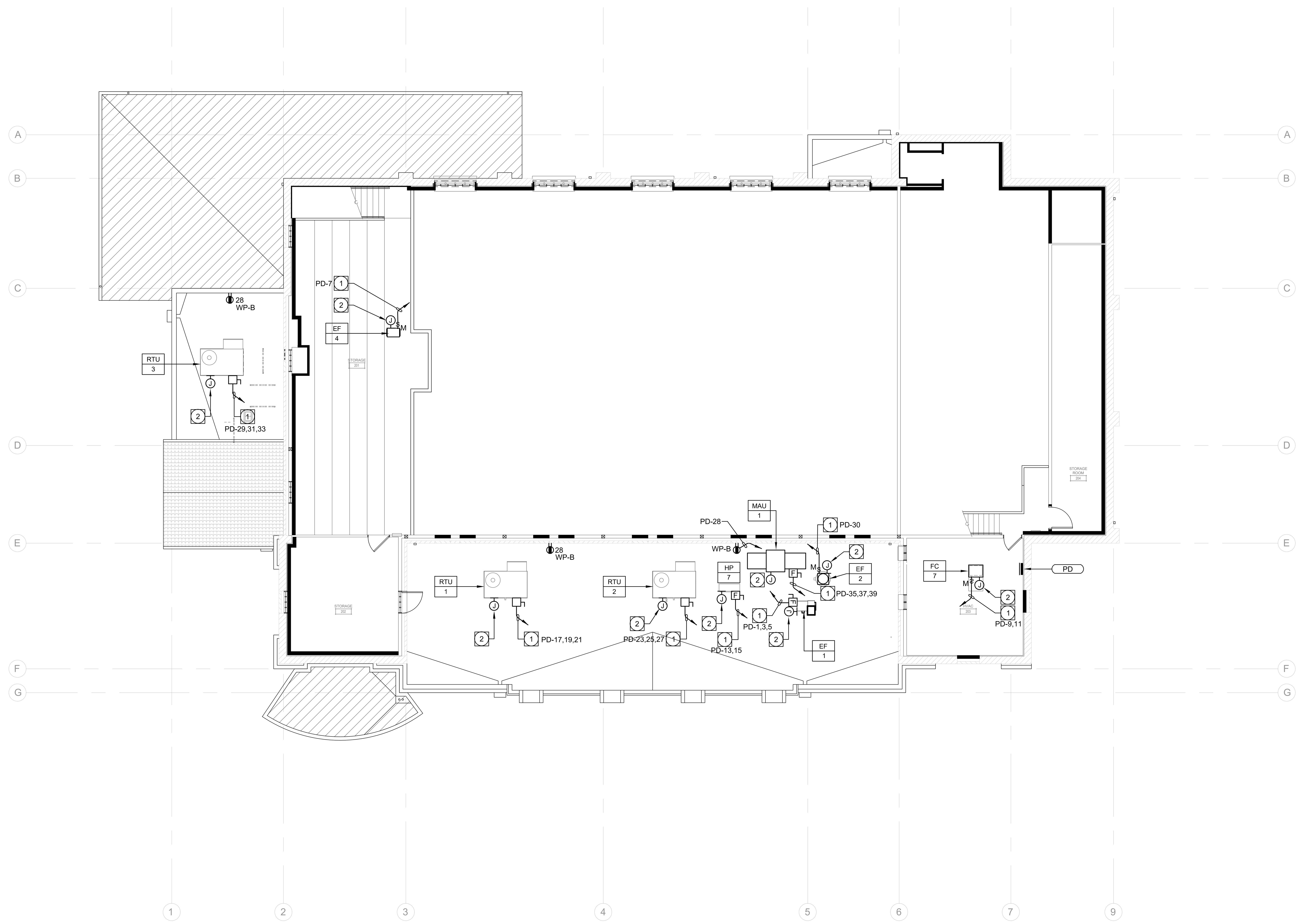

MECHANICAL POWER PLAN PLAN - LEVEL 2

SCALE: 1/8" = 1'-0"

MOTORIZED EQUIPMENT SCHEDULE GENERAL NOTES:

1. ALL BRANCH CIRCUIT DATA IS BASED UPON METALLIC CONDUITS. IF THE CONTRACTOR ELECTS TO USE NONMETALLIC CONDUITS, AN EQUIPMENT GROUNDING CONDUCTOR SHALL BE INSTALLED PER NEC, OR CEC WHERE ADOPTED, TABLE 250.122 AND THE CONDUIT SIZE SHALL BE INCREASED ACCORDINGLY.
2. ELECTRICAL CONTRACTOR SHALL REFER TO ALL DOCUMENTS RELATED TO THE EQUIPMENT (I.E. SHOP DRAWINGS, CONSTRUCTION DOCUMENTS, ETC.) IN REGARDS TO ELECTRICAL CHARACTERISTICS OF ALL EQUIPMENT LISTED IN THE SCHEDULE. ANY MODIFICATION AND/OR ADDITIONAL WORK NECESSARY SHALL BE INCLUDED IN THE BASE BID.
3. ELECTRICAL CONTRACTOR SHALL CHECK THE ROTATION OF ALL THREE PHASE MOTORS AND CORRECT THE ROTATION IF REVERSED.
4. ELECTRICAL CONTRACTOR SHALL PROVIDE FUSES SIZED PER THE EQUIPMENT NAMEPLATE INFORMATION.
5. DISCONNECT SWITCHES SHALL BE HEAVY DUTY TYPE, EXTERNALLY OPERATED, QUICK MAKE QUICK BREAK AND SHALL BE FUSIBLE OR NON FUSIBLE AS INDICATED. A MAXIMUM VOLTAGE, CURRENT AND HORSEPOWER SHALL BE CLEARLY MARKED ON SWITCH ENCLOSURE. SWITCHES HAVING DUAL RATINGS (HIGHER RATINGS WHEN USED WITH DUAL ELEMENT FUSES) SHALL HAVE RATINGS INDICATED ON METAL PLATES RIVETED OR OTHERWISE PERMANENTLY ATTACHED TO THE ENCLOSURE. WHEN INDICATED, TOGGLE SWITCHES SHALL BE MOTOR RATED FOR THE APPLICATION.
6. STARTERS SHALL BE FULL VOLTAGE, REDUCED VOLTAGE OR COMBINATION DISCONNECT AND STARTER, WITH CONTROL VOLTAGE AS REQUIRED, AS INDICATED ON THE DOCUMENTS RELATED TO THE EQUIPMENT, SUCH AS SHOP DRAWINGS, CONSTRUCTION DOCUMENTS, ETC. STARTERS SHALL INCLUDE MOTOR OVERLOAD PROTECTION, PHASE LOSS AND PHASE UNBALANCE PROTECTION AS REQUIRED.
7. ALL TERMINATIONS AND ENCLOSURES SHALL BE RATED FOR USE WITH 75 DEGREE C CONDUCTORS.
8. COMPLETE INSTALLATION SHALL CONFORM TO THE REQUIREMENTS OF NEC (OR CEC WHERE ADOPTED) ARTICLES 430 AND 440.
9. CONTRACTOR TO COORDINATE WITH ALL OTHER PROJECT TRADES AND WITH OWNER/ TENANT FOR TO OBTAIN RESPECTIVE EQUIPMENT SCCR AND PROVIDE APPROPRIATE PROTECTIVE DEVICES TO LIMIT AVAILABLE FAULT CURRENT TO LESS THAN THE EQUIPMENT NAMEPLATE SCCR PER NEC (OR CEC WHERE ADOPTED) 110.10. SEE POWER SYSTEM STUDY SPECIFICATIONS FOR ADDITIONAL REQUIREMENTS.
10. UNLESS OTHERWISE NOTED, MOCP VALUES FOR VFD-EQUIPPED DEVICE ARE SIZED PER NEC (OR CEC WHERE ADOPTED) 430.130(A).1. CONTRACTOR SHALL COORDINATE WITH ALL OTHER PROJECT TRADES AND WITH OWNER/ TENANT (IF PROVIDING EQUIPMENT ON PROJECT) TO OBTAIN NAMEPLATE VFD-EQUIPPED DEVICE MOCP VALUE FROM MANUFACTURER INSTALLATION INSTRUCTIONS AND PROVIDE APPROPRIATE PROTECTIVE DEVICES TO COMPLY WITH NEC (OR CEC WHERE ADOPTED) 430.130(A).2.

POWER PLAN GENERAL NOTES:

1. ALL RECEPTACLES ON COMMON WALLS SHALL BE SEPARATE BOXES AND OFFSET 24-INCHES MINIMUM.
2. ALL PENETRATIONS THROUGH FIRE RATED WALLS SHALL BE PROTECTED FROM THE SPREAD OF FIRE WITH AN APPROVED FIRESTOP SYSTEM EQUAL OR GREATER THAN THE FIRE RATING OF THE WALL.
3. ALL WALL-MOUNTED DEVICE HEIGHTS SHALL BE VERIFIED WITH THE ARCHITECT PRIOR TO ROUGH-IN.
4. ALL FURNITURE FEED LOCATIONS TO BE VERIFIED WITH ARCHITECT AND FURNITURE VENDOR PRIOR TO ROUGH-IN.
5. ALL FURNITURE WHIPS SHALL BE TRIMMED TO REDUCE EXCESS WHIP LENGTH.
6. WHEN EXPOSED CEILINGS OR OPEN GRID CONDITIONS OCCUR, THE CONTRACTOR WILL NEED TO PROVIDE THE FOLLOWING ITEMS:
   a. ALL BRANCH CIRCUITS SHALL BE EMT.
   b. ALL BRANCH CIRCUITS SHALL BE ROUTED ORTHOGONALLY, NEATLY TRAINED, IN PARALLEL TO STRUCTURES OR DUCTWORK. THE TERM "TRAINED" MEANS ALL PARALLEL CONDUITS SHALL MAINTAIN THE SAME SPATIAL RELATIONSHIP WITH EACH OTHER FOR ENTIRE RUN TO INCLUDE RADIUS BENDS AND SWEEPS.
   c. VISUALLY OBJECTIONABLE BRANCH CIRCUITS WILL BE REROUTED AT THE REQUEST OF THE ARCHITECT AT NO ADDITIONAL COST.
7. EXPOSED CABLE/CONDUCTORS INSTALLED IN A PLENUM SPACE SHALL CONFORM TO NEC, OR CEC WHERE ADOPTED, ARTICLE 300.22(C).
8. PROVIDE G.F.C.I. TYPE RECEPTACLE(S) OR RECEPTACLE(S) PROTECTED BY A GFCI CIRCUIT BREAKER(S) WHEN RECEPTACLES ARE 50A OR LESS, 150V TO GROUND OR LESS AND ARE LOCATED WITHIN 6-FEET OF ANY SINK OR THERAPEUTIC TUB, LAUNDRY AREA, SERVING ANY DRINKING FOUNTAIN OR VENDING MACHINE, WITHIN ANY KITCHEN SPACE, LOCKER ROOM AREA, GARAGE AND BATHROOM SPACE AND/OR LOCATED OUTDOORS. WHERE RECEPTACLES ARE NOT READILY ACCESSIBLE, PROVIDE GFCI CIRCUIT BREAKER(S) TO PROTECT THE RESPECTIVE BRANCH CIRCUIT AND PROVIDE ADDITIONAL NEUTRAL CONDUCTORS IN THE BRANCH CIRCUITING AS REQUIRED TO ENSURE PROPER GFCI FUNCTION.
9. PROVIDE OCCUPANCY SENSOR/LIGHTING CONTROL SYSTEM CONTROLLED RECEPTACLE RELAY(S) AS REQUIRED TO SWITCH CONTROLLED RECEPTACLES. CONNECT BRANCH CIRCUITRY AND CONTROL WIRING AS REQUIRED TO ALLOW OCCUPANCY SENSOR/LIGHTING CONTROL SYSTEM RELAY TO SWITCH STANDALONE AND/OR SYSTEMS FURNITURE CONTROLLED RECEPTACLES AS INDICATED ON PLANS. PROVIDE ADDITIONAL CONDUIT, WIRING AND PATHWAYS NECESSARY TO CONNECT BRANCH CIRCUITRY AND CONTROL WIRING TO REMOTE RELAYS TO INCLUDE RELAY(S) LOCATED ON ALTERNATE FLOORS, IN ELECTRICAL ROOMS, ETC.
10. PROVIDE ADDITIONAL J-BOX NEAR PANEL FOR MULTIPLE HOMERUN CIRCUITRY.
11. UNLESS SPECIFICALLY SHOWN AS (E), (R), (ER), (D), EXISTING OR NON-BOLD, ALL ELECTRICAL DEVICES SHOWN ARE NEW.
12. PROVIDE REDUNDANT GROUND PATH IN ALL BRANCH CIRCUITS SERVING PATIENT CARE AREAS CONSISTING OF A SEPARATE, INSULATED EQUIPMENT GROUNDING CONDUCTOR PER NEC, OR CEC WHERE ADOPTED, ART 517.13.

Copyright © 2025

All ideas, designs, arrangements and plans indicated or represented by this drawing are owned by, and the property of, NICHOLS, MELBURG and ROSSETTO and were created, evolved and developed for use on, and in conjunction with, the specified project. None of such ideas, designs, arrangements or plans shall be used by, or disclosed to any person, firm or corporation for any purpose whatsoever without the written permission of NICHOLS, MELBURG and ROSSETTO.

NICHOLS MELBURG & ROSSETTO
ARCHITECTS + ENGINEERS
300 KNOLLCREST DRIVE
REDDING, CA. 96002
(530) 222-3300 (530) 222-3538 FAX
http://www.nmrdesign.com

CONSULTANTS

tk1sc
Member of WSP
11870 Pierce Street, Suite 160
Riverside, California 92505
951.299.4160 www.tk1sc.com
Project Leader - Jerry Leonhardt
Electrical Lead - Jerry Leonhardt
WSP Job #: B2305166.000

LICENSE STAMPS

REGISTERED PROFESSIONAL ENGINEER
RAYMOND W. SWARTZ
No. E15610
Ex. 12/31/2025
ELECTRICAL
STATE OF CALIFORNIA

PROJECT NAME

TEHAMA COUNTY CORNING VETERAN'S HALL

1620 SOLANO ST.
CORNING, CA

SHEET TITLE

MECHANICAL POWER PLAN - LEVEL 2

DRAWING STATUS

CONSTRUCTION DOCUMENTS

REVISIONS

Sym.	Description	Date

Drawn By	
Date Issued	2/13/2025
Scale	1/8" = 1'-0"
Project No.	21-6497

SHEET No.

E2.8

Login Name: USGL700366
Plot Date: February 13, 2025 - 9:28 am
File Name: P:\2023\B2305166.000 Corning Veterans Hall Remod\Drawings and Models\CAD\Electrical\E2-8.dwg
XREFS: x-CVH_Title Block ; x-CVH-flr2 ; x-CVH-GRID

MOTORIZED EQUIPMENT SCHEDULE

ITEM	DESCRIPTION	EQUIPMENT RATING								DISC. SW. SIZE STARTER SIZE	CIRCUIT DATA CONDUIT - WIRE	SPECIFIC NOTES
				MOTOR		VFD						
		VOLTS	PH.	HP	FLA	FLA	MCA	MOCP	SCCR			
HP 1	HEAT PUMP	208	1	-	23.28	-	29.1	35	-	60AS -	3/4"C. - 2#8, 1#10 GRD. -	A
HP 2	HEAT PUMP	208	1	-	23.28	-	29.1	35	-	60AS -	3/4"C. - 2#8, 1#10 GRD. -	A
HP 3	HEAT PUMP	208	1	-	23.28	-	29.1	35	-	60AS -	3/4"C. - 2#8, 1#10 GRD. -	A
HP 4	HEAT PUMP	208	1	-	23.28	-	29.1	35	-	60AS -	3/4"C. - 2#8, 1#10 GRD. -	A
HP 5	HEAT PUMP	208	1	-	23.28	-	29.1	35	-	60AS -	3/4"C. - 2#8, 1#10 GRD. -	A
HP 6	HEAT PUMP	208	1	-	23.28	-	29.1	35	-	60AS -	3/4"C. - 2#8, 1#10 GRD. -	A
- -	- -	-	-	-	-	-	-	-	-	- -	- -	-
- -	- -	-	-	-	-	-	-	-	-	- -	- -	-
- -	- -	-	-	-	-	-	-	-	-	- -	- -	-
- -	- -	-	-	-	-	-	-	-	-	- -	- -	-
- -	- -	-	-	-	-	-	-	-	-	- -	- -	-
- -	- -	-	-	-	-	-	-	-	-	- -	- -	-
- -	- -	-	-	-	-	-	-	-	-	- -	- -	-

MOTORIZED EQUIPMENT SCHEDULE SPECIFIC NOTES:

A. FUSED AS RECOMMENDED BY MANUFACTURER.

B. MAGNETIC MOTOR STARTER WITH CONTROL TRANSFORMER, AUXILIARY CONTACTS, INDICATOR LIGHT AND H.O.A. SWITCH. VERIFY CONTROL TRANSFORMER VOLTAGE WITH M.C. PRIOR TO ORDERING MATERIAL.

C. ROUTE THROUGH LINE VOLTAGE CONTROL. SEE MECHANICAL AND/OR PLUMBING PLANS FOR ADDITIONAL REQUIREMENTS.

D. VERIFY LOCATION WITH PLUMBING PLANS PRIOR TO ROUGH-IN. CONNECT TO AQUASTAT AND TIME CLOCK AS REQUIRED.

E. REMOTE VFD. PROVIDE EARLY BREAK CONTACTS ON ANY DISCONNECT SWITCHES REQUIRED BY CODE OR SHOWN ON PLANS THAT ARE DOWNSTREAM OF THE REMOTE VFD. PROVIDE CONDUIT AND CONDUCTORS AS REQUIRED TO INTERCONNECT THE CONTACT WITH VFD "ENABLE" TERMINALS. REFER TO MECHANICAL AND/OR PLUMBING PLANS FOR LOCATION. PROVIDE FEEDER(S) TO CONNECT REMOTE VFD AND MOTOR(S) AS REQUIRED.

F. INTEGRAL VFD PROVIDED WITH EQUIPMENT. REFER TO MECHANICAL AND/OR PLUMBING PLANS FOR LOCATION. CONNECT TO VFD AS REQUIRED.

G. INTEGRAL DISCONNECT PROVIDED WITH EQUIPMENT. REFER TO MECHANICAL AND/OR PLUMBING PLANS FOR LOCATION. CONNECT TO INTEGRAL DISCONNECT AS REQUIRED.

H. INTEGRAL DISCONNECT PROVIDED WITH VFD. REFER TO MECHANICAL AND/OR PLUMBING PLANS FOR LOCATION. CONNECT TO INTEGRAL DISCONNECT AS REQUIRED.

J. ROUTE 1 PHASE CONDUCTOR OF EACH UPS ROOM/DATA ROOM EXHAUST FAN BRANCH CIRCUIT THROUGH/AROUND A DEDICATED, CURRENT-OPERATED LOAD MONITORING SWITCH THAT DETECTS OVERLOADS AND UNDERLOADS (INCLUDING FAN BELT BREAKAGE) WITHIN +/- 15 PERCENT OF AVERAGE CURRENT DRAW. LOCATE IN BARRIERED PULL BOX - NEMA 3R FOR WET LOCATIONS - AND CONNECT N.O. CONTACT TO FIRE ALARM MONITORING MODULE (SUPERVISORY SIGNAL). LOCATE PULL BOX WITH DEVICES INDOORS WHERE POSSIBLE AND ADJACENT TO THE SERVING ELECTRICAL DISTRIBUTION EQUIPMENT. PROVIDE LABEL "USPA BATTERY EX. FAN MONITOR" PER LABELING SPECIFICATIONS. (NK TECHNOLOGIES #ASM-NOU-OU-FT - www.nktechnologies.com).

K. ROUTE THROUGH LINE VOLTAGE CONTROL FOR KITCHEN HOOD FIRE SUPPRESSION SYSTEM. SEE MECHANICAL, FIRE ALARM AND FOOD SERVICE PLANS FOR ADDITIONAL REQUIREMENTS.

PLAN NOTES:

1. REFER TO MOTORIZED EQUIPMENT SCHEDULE FOR MOTOR FEEDER/ BRANCH CIRCUIT INFORMATION.

2. PROVIDE 3/4" C.O.(S) TO RESPECTIVE CONTROL DEVICE(S) FOR CONTROL WIRING. REFER TO THE EQUIPMENT CONTROL WIRING DIAGRAMS FOR ADDITIONAL INFORMATION.

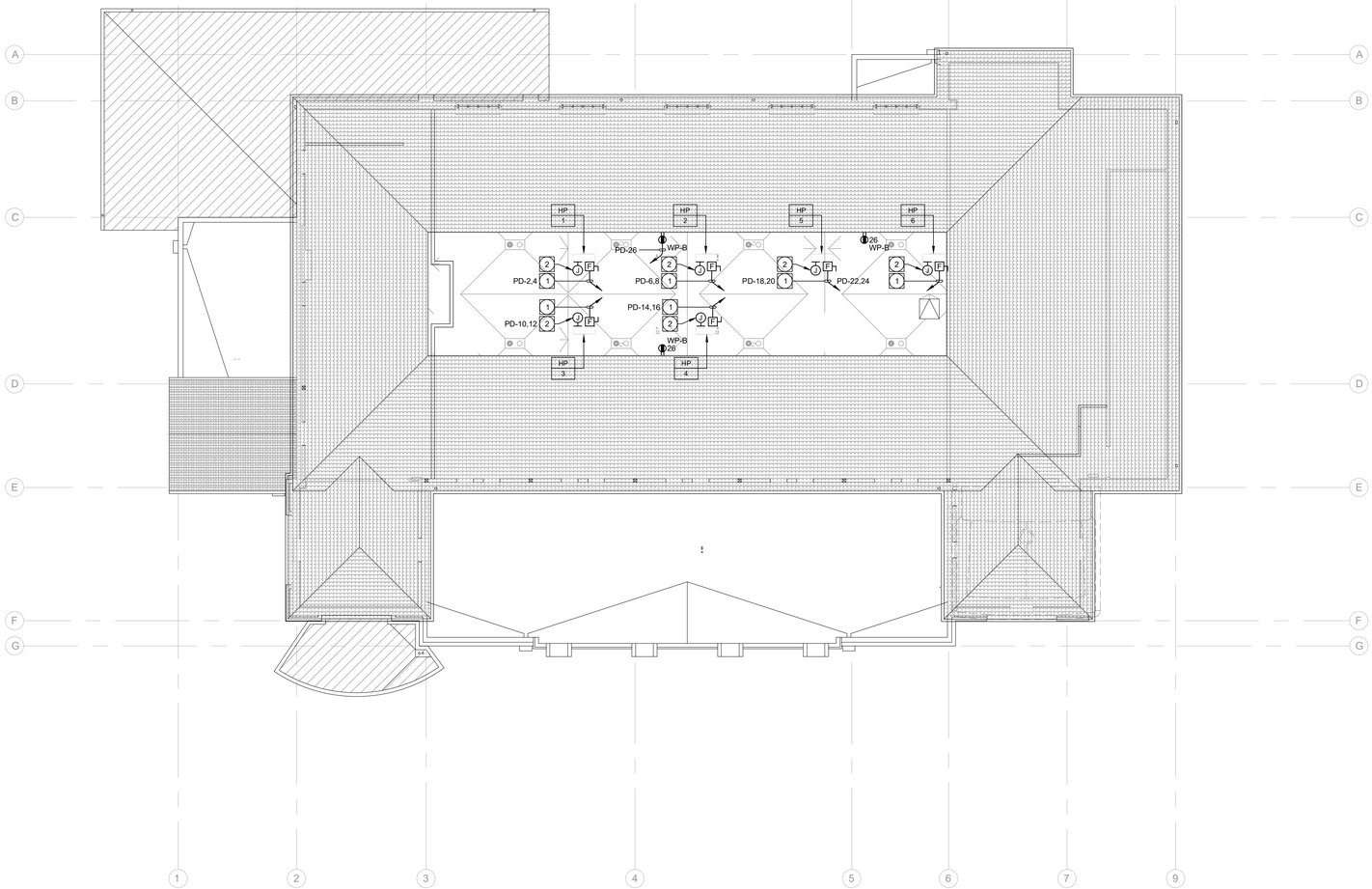

ROOF PLAN

SCALE: 1/8" = 1'-0"

ROOF PLAN GENERAL NOTES:

1. ELECTRICAL CONTRACTOR SHALL REFER TO MECHANICAL/PLUMBING AND ARCHITECTURAL DRAWINGS FOR EXACT LOCATIONS AND CHARACTERISTICS OF ALL EQUIPMENT LISTED IN SCHEDULE. ANY MODIFICATIONS AND/OR ADDITIONAL WORK NECESSARY SHALL BE INCLUDED IN THE BASE BID.

2. ALL TEMPERATURE CONTROL AND INTERLOCK CONDUIT AND WIRING SHALL BE BY ELECTRICAL CONTRACTOR UNLESS OTHERWISE NOTED. SEE MECHANICAL/PLUMBING DRAWINGS FOR ALL INFORMATION.

3. ELECTRICAL CONTRACTOR SHALL VERIFY THE EXACT LOCATION OF ALL CONNECTION POINTS WITH THE EQUIPMENT INSTALLER PRIOR TO ROUGH-IN.

4. ELECTRICAL CONTRACTOR SHALL PROVIDE LOCAL REMOTE DISCONNECTING MEANS FOR ALL ELECTRIC HEATING EQUIPMENT IF REQUIRED BY THE LOCAL ELECTRICAL CODE.

5. ELECTRICAL CONTRACTOR SHALL COORDINATE THE ROUTING OF CONDUIT/WIRING TO ROOF-MOUNTED EQUIPMENT WITH EQUIPMENT INSTALLER PRIOR TO ROUGH-IN. WHERE ROOF-MOUNTED EQUIPMENT IS MANUFACTURED TO BE FED FROM WITHIN MECHANICAL CURB ASSEMBLY - SEPARATE ROOF PENETRATIONS FOR WIRING CONNECTIONS SHALL NOT BE PERMITTED. ALL WIRING SHALL BE BELOW THE ROOF IN AN ACCESSIBLE CEILING SPACE LOCATION.

6. ALL ROOF MOUNTED EQUIPMENT SHALL BE NEMA 3R RATED.

7. UNLESS SPECIFICALLY SHOWN AS (E), (R), (ER), (D), EXISTING OR NON-BOLD, ALL ELECTRICAL DEVICES SHOWN ARE NEW.

MOTORIZED EQUIPMENT SCHEDULE GENERAL NOTES:

1. ALL BRANCH CIRCUIT DATA IS BASED UPON METALLIC CONDUITS. IF THE CONTRACTOR ELECTS TO USE NONMETALLIC CONDUITS, AN EQUIPMENT GROUNDING CONDUCTOR SHALL BE INSTALLED PER NEC, OR CEC WHERE ADOPTED, TABLE 250.122 AND THE CONDUIT SIZE SHALL BE INCREASED ACCORDINGLY.

2. ELECTRICAL CONTRACTOR SHALL REFER TO ALL DOCUMENTS RELATED TO THE EQUIPMENT (I.E. SHOP DRAWINGS, CONSTRUCTION DOCUMENTS, ETC.) IN REGARDS TO ELECTRICAL CHARACTERISTICS OF ALL EQUIPMENT LISTED IN THE SCHEDULE. ANY MODIFICATION AND/OR ADDITIONAL WORK NECESSARY SHALL BE INCLUDED IN THE BASE BID.

3. ELECTRICAL CONTRACTOR SHALL CHECK THE ROTATION OF ALL THREE PHASE MOTORS AND CORRECT THE ROTATION IF REVERSED.

4. ELECTRICAL CONTRACTOR SHALL PROVIDE FUSES SIZED PER THE EQUIPMENT NAMEPLATE INFORMATION.

5. DISCONNECT SWITCHES SHALL BE HEAVY DUTY TYPE. EXTERNALLY OPERATED, QUICK MAKE QUICK BREAK AND SHALL BE FUSIBLE OR NON FUSIBLE AS INDICATED. A MAXIMUM VOLTAGE, CURRENT AND HORSEPOWER SHALL BE CLEARLY MARKED ON SWITCH ENCLOSURE. SWITCHES HAVING DUAL RATINGS (HIGHER RATINGS WHEN USED WITH DUAL ELEMENT FUSES) SHALL HAVE RATINGS INDICATED ON METAL PLATES RIVETED OR OTHERWISE PERMANENTLY ATTACHED TO THE ENCLOSURE. WHEN INDICATED, TOGGLE SWITCHES SHALL BE MOTOR RATED FOR THE APPLICATION.

6. STARTERS SHALL BE FULL VOLTAGE, REDUCED VOLTAGE OR COMBINATION DISCONNECT AND STARTER, WITH CONTROL VOLTAGE AS REQUIRED, AS INDICATED ON THE DOCUMENTS RELATED TO THE EQUIPMENT, SUCH AS SHOP DRAWINGS, CONSTRUCTION DOCUMENTS, ETC. STARTERS SHALL INCLUDE MOTOR OVERLOAD PROTECTION, PHASE LOSS AND PHASE UNBALANCE PROTECTION AS REQUIRED.

7. ALL TERMINATIONS AND ENCLOSURES SHALL BE RATED FOR USE WITH 75 DEGREE C CONDUCTORS.

8. COMPLETE INSTALLATION SHALL CONFORM TO THE REQUIREMENTS OF NEC (OR CEC WHERE ADOPTED) ARTICLES 430 AND 440.

9. CONTRACTOR TO COORDINATE WITH ALL OTHER PROJECT TRADES AND WITH OWNER/ TENANT FOR TO OBTAIN RESPECTIVE EQUIPMENT SCCR AND PROVIDE APPROPRIATE PROTECTIVE DEVICES TO LIMIT AVAILABLE FAULT CURRENT TO LESS THAN THE EQUIPMENT NAMEPLATE SCCR PER NEC (OR CEC WHERE ADOPTED) 110.10. SEE POWER SYSTEM STUDY SPECIFICATIONS FOR ADDITIONAL REQUIREMENTS.

10. UNLESS OTHERWISE NOTED, MOCP VALUES FOR VFD-EQUIPPED DEVICE ARE SIZED PER NEC (OR CEC WHERE ADOPTED) 430.130(A).1. CONTRACTOR SHALL COORDINATE WITH ALL OTHER PROJECT TRADES AND WITH OWNER/ TENANT (IF PROVIDING EQUIPMENT ON PROJECT) TO OBTAIN NAMEPLATE VFD-EQUIPPED DEVICE MOCP VALUE FROM MANUFACTURER INSTALLATION INSTRUCTIONS AND PROVIDE APPROPRIATE PROTECTIVE DEVICES TO COMPLY WITH NEC (OR CEC WHERE ADOPTED) 430.130(A).2.

Copyright © 2025

All ideas, designs, arrangements and plans indicated or represented by this drawing are owned by, and the property of, NICHOLS, MELBURG and ROSSETTO and were created, evolved and developed for use on, and in conjunction with, the specified project. None of such ideas, designs, arrangements and plans shall be used by or disclosed to any person, firm or corporation for any purpose whatsoever without the written permission of NICHOLS, MELBURG and ROSSETTO.

NICHOLS MELBURG & ROSSETTO
ARCHITECTS + ENGINEERS

300 KNOLLCREST DRIVE
REDDING, CA. 96002
(530) 222-3300 (530) 222-3538 FAX
http://www.nmrdesign.com

CONSULTANTS

tk1sc
Member of WSP
11870 Pierce Street, Suite 160
Riverside, California 92505
951.299.4160 www.tk1sc.com

Project Leader - Jerry Leonhardt
Electrical Lead - Jerry Leonhardt
WSP Job #: B2305166.000

LICENSE STAMPS

REGISTERED PROFESSIONAL ENGINEER
RAYMOND W. GRAFF
No. E15610
Exp. 12/31/2025
ELECTRICAL
STATE OF CALIFORNIA

PROJECT NAME

TEHAMA COUNTY
CORNING
VETERAN'S HALL

1620 SOLANO ST.
CORNING, CA

SHEET TITLE

ROOF PLAN

DRAWING STATUS

CONSTRUCTION DOCUMENTS

REVISIONS

Sym.	Description	Date

Drawn By	
Date Issued	2/13/2025
Scale	1/8" = 1'-0"
Project No.	21-6497

SHEET No.

E2.9

Logo Name: USQ_700W6
Plot Date: February 13, 2025 - 9:29 am
File Name: P:\2021\B2305166.000 Corning Veterans Hall Remod\Drawings and Models\CAD\Electrical\E2-9.dwg
WSPBS: 8 CHL-Title Block 1x CHPlot2 1x CHPlot1 1x CHPlot0 GRB

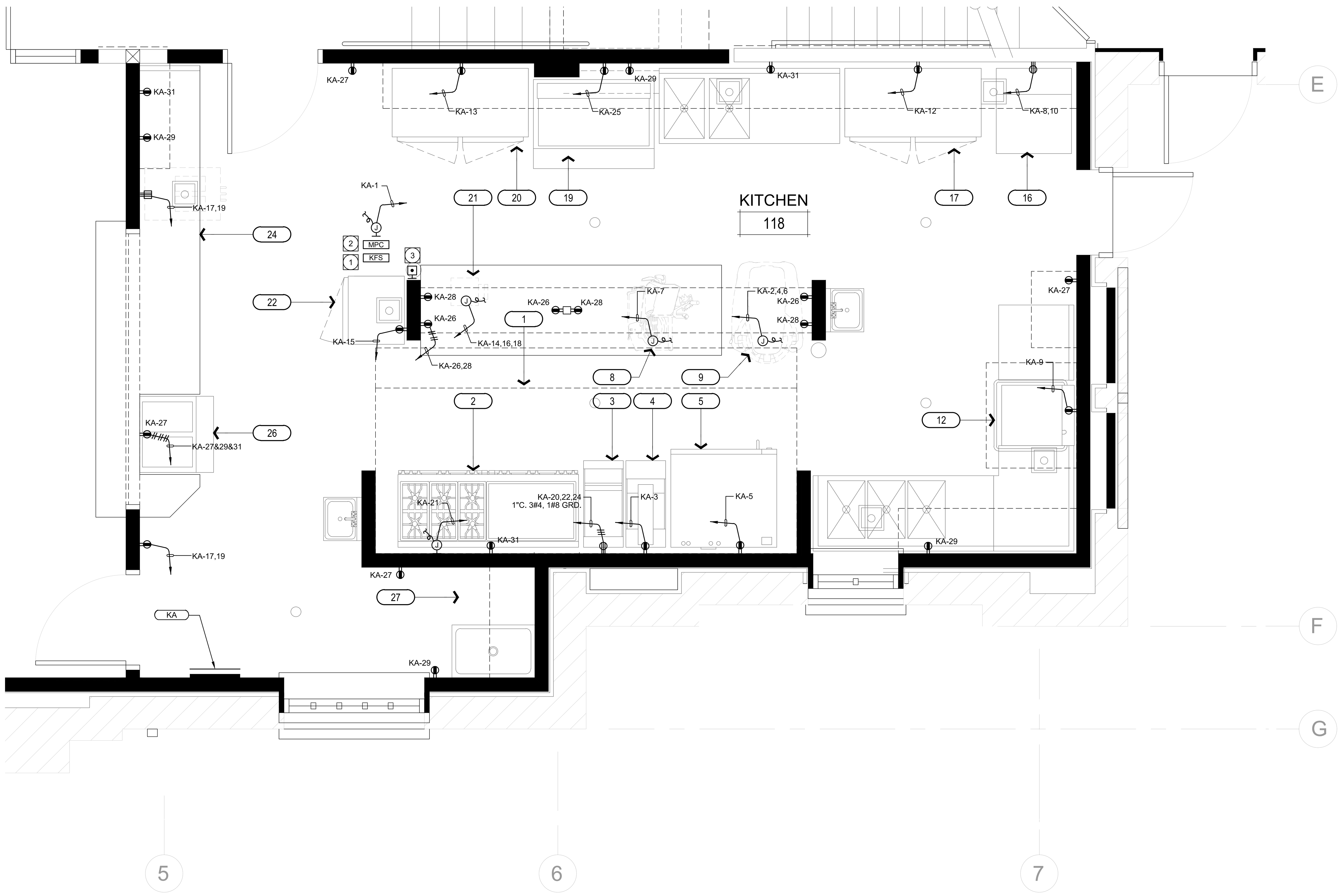

ENLARGED KITCHEN POWER PLAN

SCALE: 1/2" = 1'-0"

EQUIPMENT SCHEDULE

ITEM	QTY	DESCRIPTION	MANUFACTURER	MODEL NUMBER	NOTES	UTILITY REQUIREMENTS ELECTRIC	GAS	WATER	WASTE
1	1	HOOD, 12' LONG WITH INTEGRAL ANSUL SYSTEM	SEE MECHANICAL DRAWINGS	SEE MECHANICAL DRAWINGS		●			
2	1	RANGE (E)	WOLF	C72SS-6B36GN	OFCI	●	●		
3	1	FRYER	PITCO	SE148		●			
4	1	FRY DUMPSTATION	PITCO	BNB-SE14		●			
5	1	COMBI OVEN	VULCAN	ABC7G-NAT	OFCI	●	●		
6	1	10' x 3' STAINLESS STEEL TABLE (SHELF BELOW)	CUSTOM FABRICATED	SEE ELEVATIONS					
7	1	13' x 18" STAINLESS STEEL SHELVES	CUSTOM FABRICATED	SEE ELEVATIONS					
8	1	MEAT SLICER	HOBART	HS9	NIC	●			
9	1	STAND MIXER	HOBART	LEGACY HL600 MIXER	NIC	●			
10	1	3 COMPARTMENT SINK	ADVANCE TABCO	FC-3-2424				●	●
11	2	30" DEEP STAINLESS STEEL COUNTER	CUSTOM FABRICATED	SEE ELEVATIONS					
12	1	DISHWASHER	HOBART	CDL-1	OFCI	●		●	●
13	1	TYPE II HOOD	SEE MECHANICAL DRAWINGS	SEE MECHANICAL DRAWINGS		●			
14	2	HAND WASHING SINK	EAGLE	HSAN-10-F-LRS				●	●
15	5	18" DEEP STAINLESS STEEL SHELVES, WALL MOUNTED	CUSTOM FABRICATED	SEE ELEVATIONS					
16	1	ICE MAKER W/ BIN (NUGGET)	MANITOWOC	RNF-1100A/D570		●		●	●
17	1	FREEZER	TRUE	TS-49F-4-HC		●			
18	1	PREP SINK	CUSTOM FABRICATED	SEE ELEVATIONS				●	●
19	1	DELI STATION	DELFIELD	4448NP-18M		●			
20	1	REFRIGERATOR	TRUE	TS-49-A-HC		●			
21	1	FOOD PROCESSOR	ROBOT COUPE	R602	NIC	●			
22	1	BEVERAGE REFRIGERATOR	TRUE	T-19G-HC~FGD01		●			
23	1	ICE CREAM MACHINE	SPACEMAN	6235-C	NIC	●			●
24	1	STAINLESS STEEL COUNTERTOP	CUSTOM FABRICATED	SEE ELEVATIONS					
25	1	WARMING STATION	AVANTCO	177W50	NIC	●			
26	1	HOT FOOD SERVING COUNTER	DUKE	E302SW	OFCI	●			
27	1	JANITOR SINK	SEE PLUMBING DRAWINGS	SEE PLUMBING DRAWINGS				●	●

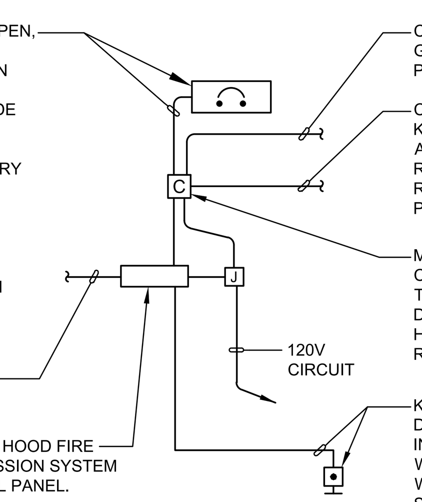

1 KITCHEN HOOD FIRE SUPPRESSION SYSTEM SCHEMATIC

SCALE: N.T.S.

PLAN NOTES:

1. CONNECT TO KITCHEN HOOD FIRE SUPPRESSION SYSTEM AS REQUIRED. SEE KITCHEN HOOD FIRE SUPPRESSION SYSTEM SCHEMATIC FOR MORE INFORMATION.
2. MULTIPOLE CONTACTOR CABINET, HINGED, LOCKABLE, LOCATED ABOVE KITCHEN HOOD FIRE SUPPRESSION PANEL - IF REQUIRED - TO HOUSE INTERPOSING RELAYS/CONTACTORS FOR KITCHEN HOOD FIRE SUPPRESSION SYSTEM. SEE KITCHEN HOOD FIRE SUPRESSION SYSTEM SCHEMATIC FOR MORE INFORMATION.
3. KITCHEN HOOD FIRE SUPPRESSION SYSTEM DISCHARGE STATION INSTALLED WITH REQUIRED CONDUIT, WIRE AND J-BOX BY E.C. VERIFY LOCATION WITH PLANS AND KITCHEN PLANS AND KITCHEN HOOD FIRE SUPPRESSION SYSTEM CONTRACTOR PRIOR TO ROUGH-IN.

KITCHEN PLAN GENERAL NOTES:

1. INTERNAL WIRING AND PLUMBING OF FABRICATED FIXTURES SHALL BE THE RESPONSIBILITY OF THE FIXTURE MANUFACTURER, UNLESS OTHERWISE NOTED. FINAL HOOKUP OF EQUIPMENT AND FIXTURES SHALL BE BY THE ELECTRICAL AND/OR PLUMBING CONTRACTORS.
2. CONTRACTOR SHALL VERIFY ALL DIMENSIONS AT THE JOB SITE BEFORE STARTING FABRICATION OF CUSTOM FABRICATED FIXTURES.
3. CONVENIENCE OUTLETS SHALL BE SET HORIZONTALLY.
4. WHERE STUBBING UP OUT OF A FLOOR, CONDUIT SHALL EXTEND A MINIMUM OF 4" ABOVE THE FINISHED FLOOR OR CURB.
5. CONTRACTOR SHALL SUPPLY AND INSTALL STAINLESS STEEL COVER PLATES ON PARTIALLY OR WHOLLY EXPOSED PULL BOXES AND ACCESS BOXES.
6. CONTRACTOR SHALL SUPPLY AND INSTALL LOCKOUT DEVICES ON BREAKERS FOR CLOCKS, MECHANICAL REFRIGERATION SYSTEMS, CONTROL WIRING AND EXHAUST HOOD FIRE PROTECTION SYSTEM CONTROLS.
7. CONTRACTOR SHALL SUPPLY AND INSTALL SWITCHES FOR HEAT LAMPS, EXHAUST HOOD LIGHTS AND MAKE-UP AIR SYSTEMS. VERIFY LOCATIONS WITH ARCHITECT.
8. WHEN ELECTRIC SOLENOID GAS SHUTOFF VALVES ARE SPECIFIED FOR THE EXHAUST HOOD FIRE PROTECTION SYSTEM, THE EXHAUST HOOD FIRE PROTECTION SYSTEM CONTRACTOR SHALL FURNISH AND ELECTRICAL SHALL INSTALL THE DEVICES. REFER TO ARCHITECTURAL KITCHEN DRAWING, SHEET A-3.2.
9. CONTRACTOR SHALL PROVIDE POWER FOR AND CONNECT REFRIGERATION COMPRESSORS AND BLOWER COILS, AND AUTOMATIC DEFROST SYSTEMS SHOWN ON THE REFRIGERATION SCHEDULE. FURNISH AND INSTALL MAGNETIC STARTERS AND THERMO-OVERLOAD PROTECTION DEVICES AS REQUIRED.
10. CONTRACTOR SHALL PACK SEAL AND ALL EXPOSED J-BOXES AND CONDUIT ON WALK-IN COOLERS AND FREEZERS TO PREVENT INTERNAL CONDENSATION.
11. CONTRACTOR SHALL PROVIDE POWER TO AND CONNECT KITCHEN EXHAUST AND MAKE-UP AIR BLOWER MOTORS, WHETHER PROVIDED BY FOOD SERVICE EQUIPMENT AND FIXTURE CONTRACTOR OR HVAC SECTION.
12. CONTRACTOR SHALL PROVIDE CONDUITS AND PULL BOXES FOR REFRIGERATION, BEVERAGE AND SODA LINES.
13. BEFORE INSTALLING J-BOXES OR OTHER FITTINGS ON WALK-IN REFRIGERATOR WALLS OR CEILINGS, VERIFY EXISTENCE OF ADEQUATE SUPPORT AND INSULATION WITH REFRIGERATOR MANUFACTURER. ALL CONDUIT MOUNTED ON INTERIOR OF WALK-INS SHALL BE SPACED 1" OFF WALL.
14. VERIFY MOUNTING HEIGHTS WITH ARCHITECT PRIOR TO ROUGH-IN.
15. THE CONTRACTOR SHALL REVIEW ALL OF THE FOOD SERVICE EQUIPMENT PLANS PRIOR TO BID FOR ALL WORK REQUIRED BY THE CONTRACTOR AND SHALL INCLUDE IN THE BID ALL NECESSARY MATERIAL AND LABOR TO CONNECT AND PROVIDE CIRCUITING TO ALL KITCHEN EQUIPMENT. IF ANY DISCREPANCIES ARE FOUND THE CONTRACTOR SHALL ISSUE AN RFI FOR CLARIFICATION PRIOR TO BID.

ALL RECEPTACLES WITHIN KITCHEN OR SERVING AREA SHALL BE GFI-TYPE.

POWER PLAN GENERAL NOTES:

1. ALL RECEPTACLES ON COMMON WALLS SHALL BE SEPARATE BOXES AND OFFSET 24-INCHES MINIMUM.
2. ALL PENETRATIONS THROUGH FIRE RATED WALLS SHALL BE PROTECTED FROM THE SPREAD OF FIRE WITH AN APPROVED FIRESTOP SYSTEM EQUAL OR GREATER THAN THE FIRE RATING OF THE WALL.
3. ALL WALL-MOUNTED DEVICE HEIGHTS SHALL BE VERIFIED WITH THE ARCHITECT PRIOR TO ROUGH-IN.
4. ALL FURNITURE FEED LOCATIONS TO BE VERIFIED WITH ARCHITECT AND FURNITURE VENDOR PRIOR TO ROUGH-IN.
5. ALL FURNITURE WHIPS SHALL BE TRIMMED TO REDUCE EXCESS WHIP LENGTH.
6. WHEN EXPOSED CEILINGS OR OPEN GRID CONDITIONS OCCUR, THE CONTRACTOR WILL NEED TO PROVIDE THE FOLLOWING ITEMS:
   a. ALL BRANCH CIRCUITS SHALL BE EMT.
   b. ALL BRANCH CIRCUITS SHALL BE ROUTED ORTHOGONALLY, NEATLY TRAINED, IN PARALLEL TO STRUCTURES OR DUCTWORK. THE TERM "TRAINED" MEANS ALL PARALLEL CONDUITS SHALL MAINTAIN THE SAME SPATIAL RELATIONSHIP WITH EACH OTHER FOR ENTIRE RUN TO INCLUDE RADIUS BENDS AND SWEEPS.
   c. VISUALLY OBJECTIONABLE BRANCH CIRCUITS WILL BE REROUTED AT THE REQUEST OF THE ARCHITECT AT NO ADDITIONAL COST.
7. EXPOSED CABLE/CONDUCTORS INSTALLED IN A PLENUM SPACE SHALL CONFORM TO NEC, OR CEC WHERE ADOPTED, ARTICLE 300.22(C).
8. PROVIDE G.F.C.I. TYPE RECEPTACLE(S) OR RECEPTACLE(S) PROTECTED BY A GFCI CIRCUIT BREAKER(S) WHEN RECEPTACLES ARE 50A OR LESS, 150V TO GROUND OR LESS AND ARE LOCATED WITHIN 6-FEET OF ANY SINK OR THERAPEUTIC TUB, LAUNDRY AREA, SERVING ANY DRINKING FOUNTAIN OR VENDING MACHINE, WITHIN ANY KITCHEN SPACE, LOCKER ROOM AREA, GARAGE AND BATHROOM SPACE AND/OR LOCATED OUTDOORS. WHERE RECEPTACLES ARE NOT READILY ACCESSIBLE, PROVIDE GFCI CIRCUIT BREAKER(S) TO PROTECT THE RESPECTIVE BRANCH CIRCUIT AND PROVIDE ADDITIONAL NEUTRAL CONDUCTORS IN THE BRANCH CIRCUITING AS REQUIRED TO ENSURE PROPER GFCI FUNCTION.
9. PROVIDE OCCUPANCY SENSOR/LIGHTING CONTROL SYSTEM CONTROLLED RECEPTACLE RELAY(S) AS REQUIRED TO SWITCH CONTROLLED RECEPTACLES. CONNECT BRANCH CIRCUITRY AND CONTROL WIRING AS REQUIRED TO ALLOW OCCUPANCY SENSOR/LIGHTING CONTROL SYSTEM RELAY TO SWITCH STANDALONE AND/OR SYSTEMS FURNITURE CONTROLLED RECEPTACLES AS INDICATED ON PLANS. PROVIDE ADDITIONAL CONDUIT, WIRING AND PATHWAYS NECESSARY TO CONNECT BRANCH CIRCUITRY AND CONTROL WIRING TO REMOTE RELAYS TO INCLUDE RELAY(S) LOCATED ON ALTERNATE FLOORS, IN ELECTRICAL ROOMS, ETC.
10. PROVIDE ADDITIONAL J-BOX NEAR PANEL FOR MULTIPLE HOMERUN CIRCUITRY.
11. UNLESS SPECIFICALLY SHOWN AS (E), (R), (ER), (D), EXISTING OR NON-BOLD, ALL ELECTRICAL DEVICES SHOWN ARE NEW.

Copyright © 2025
All ideas, designs, arrangements and plans indicated or represented by this drawing are owned by, and the property of, NICHOLS, MELBURG and ROSSETTO and were created, evolved and developed for use on, and in conjunction with, the specified project. None of such ideas, designs, arrangements or plans shall be used by, or disclosed to any person, firm or corporation for any purpose whatsoever without the written permission of NICHOLS, MELBURG and ROSSETTO.

NICHOLS MELBURG & ROSSETTO
ARCHITECTS + ENGINEERS
300 KNOLLCREST DRIVE
REDDING, CA. 96002
(530) 222-3300 (530) 222-3538 FAX
http://www.nmrdesign.com

CONSULTANTS

tk1sc
Member of WSP
11870 Pierce Street, Suite 160
Riverside, California 92505
951.299.4160 www.tk1sc.com
Project Leader - Jerry Leonhardt
Electrical Lead - Jerry Leonhardt
WSP Job #: B2305166.000

LICENSE STAMPS

REGISTERED PROFESSIONAL ENGINEER
RAYMOND W. SWARTZ
No. E15610
Exp. 12/31/2025
ELECTRICAL
STATE OF CALIFORNIA

PROJECT NAME

TEHAMA COUNTY
CORNING
VETERAN'S HALL

1620 SOLANO ST.
CORNING, CA

SHEET TITLE

ELECTRICAL
ENLARGED PLAN

DRAWING STATUS

CONSTRUCTION
DOCUMENTS

REVISIONS

Sym.	Description	Date

Drawn By	
Date Issued	2/13/2025
Scale	1/2"=1'-0"
Project No.	21-6497

SHEET No.

E2.10

Login Name: USGL700366
Plot Date: February 13, 2025 - 9:29 am
File Name: P:\2023\B2305166.000 Corning Veterans Hall Remod\Drawings and Models\CAD\Electrical\E2-10.dwg
XREFS: x-CVH_Title Block : x-CVH-flr1 : x-CVH-GRID

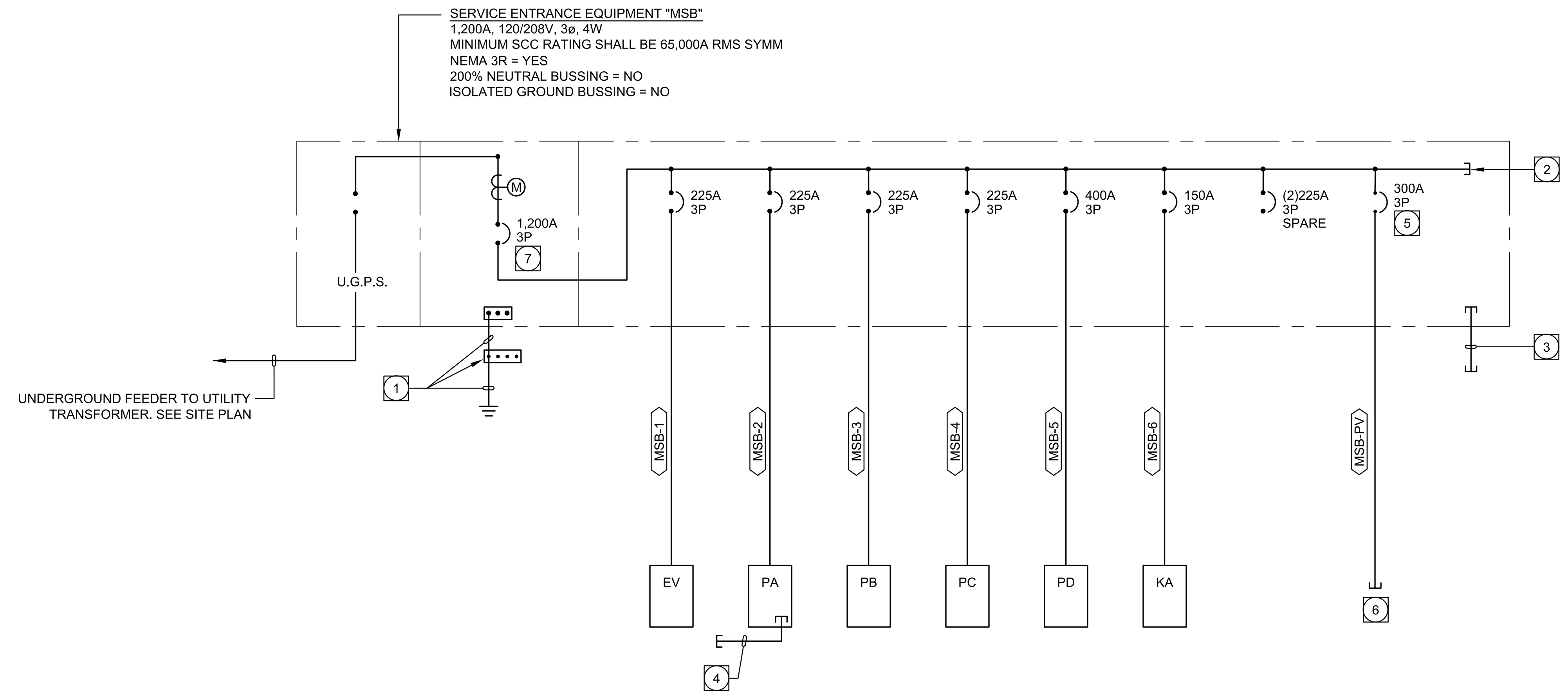

SINGLE LINE DIAGRAM

SCALE: NONE

✳✳✳ TELECOMMUNICATIONS GROUND CONDUCTOR MINIMUM SIZE SHALL BE BASED ON DISTANCE BETWEEN TELECOMMUNICATIONS ROOM AND SYSTEM GROUNDING BUS BAR AS FOLLOWS: 0-100 FT. #1/0 OVER 100 FT. #3/0
✳✳ MAIN BONDING JUMPER SHALL BE SIZED AS FOLLOWS: SERVICE SIZE — M.B.J. SIZE 0-1,000A — #3/0 1,200A — #4/0 1,600A — #300KCMIL 2,000A — #400KCMIL 2,500A — #500KCMIL 3,000A — #600KCMIL 4,000A — #700KCMIL
✳ GROUNDING ELECTRODE CONDUCTOR SHALL BE SIZED AS FOLLOWS: SERVICE SIZE — G.E.C. SIZE 0-200A — #4 201-400A — #1/0 OVER 401A — #3/0

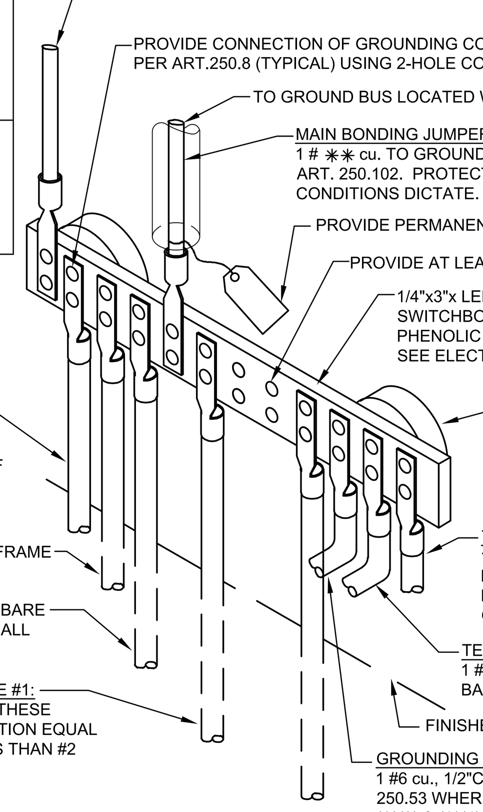

1 MAIN SERVICE SYSTEM GROUNDING DETAIL

SCALE: NTS

FEEDER SCHEDULE

FEEDER	CONDUIT AND CONDUCTORS	LOAD A	DISTANCE	V.D. (%)	A.I.C.	NOTES
MSB-1	2.5"C. 4#4/0 & 1#2 GRD. -	(180)	15'	0.14	38.4K	-
MSB-2	2.5"C. 4#4/0 & 1#2 GRD. -	(180)	100'	0.95	14.6K	-
MSB-3	2.5"C. 4#4/0 & 1#2 GRD. -	(180)	80'	0.76	17.1K	-
MSB-4	2.5"C. 4#4/0 & 1#2 GRD. -	(180)	60'	0.57	20.6K	-
MSB-5	(2) [2-1/2"C. 4#3/0 & 1#4 GRD. EACH] -	(320)	160'	1.70	15.1K	-
MSB-6	2"C. 4#1/0 & 1#6 GRD. -	(120)	145'	1.84	<10K	-
MSB-PV	2-1/2"C. 3#350KCMIL & 1#3 GRD -	(240)	-	-	-	-

GENERAL SINGLE LINE DIAGRAM NOTES:

1. ALL SWITCHGEAR SHALL TO MATCH EXISTING ON CAMPUS.
2. ALL ITEMS DEPICTED ON THE SINGLE LINE DRAWINGS SHALL BE ASSUMED AS NEW U.O.N.
3. ALL OVERCURRENT DEVICES IN AN INDIVIDUAL PIECE OF EQUIPMENT SHALL HAVE AN AIC RATING EQUAL TO THE OVERALL RATING OF THE EQUIPMENT-SERIES RATING OF DEVICES WITHIN A PIECE OF EQUIPMENT IS NOT ALLOWED. SEE SPECIFICATIONS FOR MORE INFORMATION.
4. SERIES RATED DEVICES SHALL HAVE BEEN INVESTIGATED BY UL IN COMBINATION WITH THE END USE EQUIPMENT AND IN THE EQUIPMENT IN WHICH THESE DEVICES ARE USED SHALL BE MARKED WITH A SERIES RATING. ALL EQUIPMENT SHALL BE MARKED IN ACCORDANCE WITH NEC (OR CEC-WHERE ADOPTED) REQUIREMENTS. SEE SPECIFICATIONS FOR MORE INFORMATION. WHERE SERIES RATINGS ARE ALLOWED, THE EQUIPMENT SHALL BE LEGIBLY MARKED IN THE FIELD TO INDICATE A SERIES COMBINATION RATING. WHICH SHALL BE READILY VISIBLE AND STATE THE FOLLOWING:

   CAUTION - SERIES COMBINATION SYSTEM RATED AT ??,??? AMPERES. USE ONLY IDENTIFIED REPLACEMENT COMPONENTS IN THIS SYSTEM.

   WHERE ??,??? REPRESENTS AVAILABLE FAULT CURRENT. SEE SPECIFICATIONS FOR PLACARD REQUIREMENTS.
5. ALL TERMINATIONS AND ENCLOSURES SHALL BE RATED FOR USE WITH 75 DEGREE CELSIUS CONDUCTORS.
6. ALL SERVICE ENTRANCE EQUIPMENT RATED AT 400A OR GREATER SHALL BE PROVIDED WITH A BACKFEED-RATED, SOLID STATE MAIN OVERCURRENT DEVICE AND BUSSING RATED AT 100% OPERATION. NON-SERVICE ENTRANCE SWITCHBOARDS AND DISTRIBUTION BOARDS LARGER THAN 600A SHALL BE PROVIDED WITH A SOLID STATE MAIN OVERCURRENT DEVICE, IF SHOWN ON PLANS, AND WITH BUSSING RATED AT 100% OPERATION. ALL NON-SERVICE ENTRANCE SWITCHBOARDS AND DISTRIBUTION BOARD MAIN OVERCURRENT DEVICES SHALL BE BACKFEED-RATED. BACKFEED RATINGS SHALL COMPLY WITH NEC, OR CEC WHERE ADOPTED, 690.64(B)(5). SEE SPECIFICATIONS FOR ADDITIONAL REQUIREMENTS REGARDING CIRCUIT BREAKERS.
7. ALL SWITCHBOARDS AND DISTRIBUTION BOARDS SHALL HAVE:
   a. TIN-PLATED ALUMINUM BUSSING WITH RECTANGULAR CROSS SECTION. HORIZONTAL AND VERTICAL BUSSING SHALL BE FULL LENGTH AND SHALL HAVE PROVISIONS FOR FUTURE EXTENSIONS. ALL BUSSING SHALL HAVE MINIMUM WITHSTAND RATING EQUAL TO THE AVAILABLE FAULT CURRENT INDICATED. ALL VERTICAL AND HORIZONTAL BUSSING SHALL BE RATED AT FULL CAPACITY IN ALL SWITCHBOARD AND DISTRIBUTION BOARD SECTIONS. PROVIDE 100% NEUTRAL BUSSING MINIMUM UNLESS OTHERWISE NOTED. PROVIDE FULL LENGTH GROUND BUS AND, WHERE INDICATED ON PLANS, ISOLATED GROUND BUSSING. PROVIDE REAR WIRE WAY IN ALL SWITCHBOARD SECTIONS.
   b. LUGS SUITABLE FOR USE WITH COPPER OR ALUMINUM CONDUCTORS LISTED FOR USE WITH 75 DEGREE CELSIUS AMPACITY CONDUCTORS.
   c. PERMANENT PLACARD(S) MARKED PER THE SPECIFICATIONS AND PER NEC (OR CEC-WHERE ADOPTED) SECTIONS 225.37, 230.2(E), 690.56(B) & (C), 692.56, 700.8, 701.9, AND 702.8 DENOTING THE PRESENCE OF ADDITIONAL SERVICES, PHOTOVOLTAIC SYSTEMS, FUEL CELLS, EMERGENCY OR STAND-BY POWER SOURCES AS APPLICABLE.
8. CONTRACTOR SHALL SUBMIT SWITCHBOARD SHOP DRAWINGS TO THE SERVING UTILITY FOR APPROVAL PRIOR TO FABRICATION. CONTRACTOR SHALL SECURE CONFIRMATION THAT THE PROPOSED SWITCHBOARD COMPLIES WITH ELECTRIC UTILITY COMPANY REGULATIONS.
9. CONTRACTOR SHALL SUBMIT SHOP DRAWINGS PER THE SPECIFICATIONS FOR SWITCHBOARDS, DISTRIBUTION BOARDS TRANSFORMERS, PANEL BOARDS AND ALL OTHER DEVICES SHOWN ON THE SINGLE LINE PRIOR TO FABRICATION.
10. ALLOWABLE DIMENSIONS IN MAIN ELECTRICAL ROOM ARE A CRITICAL COORDINATION ITEM. CONTRACTOR SHALL PROVIDE 1/4"= 1'-0" SCALE DRAWINGS WITH SWITCHGEAR SUBMITTALS SHOWING THAT ALL PROPOSED EQUIPMENT WILL FIT IN THE SPACE PROVIDED. SUBMITTALS WITHOUT THIS DRAWING SHALL BE REJECTED AS INCOMPLETE.
11. UNLESS SPECIFICALLY SHOWN AS (E), (R), (ER), (D), EXISTING OR NON-BOLD, ALL ELECTRICAL DEVICES SHOWN ARE NEW.
12. WHERE REQUIRED BY THE LOCAL AUTHORITY HAVING JURISDICTION OR WHERE A NEW GROUND FAULT PROTECTIVE DEVICE IS BEING INSTALLED, A GROUND FAULT SYSTEM TEST SHALL BE CONDUCTED BY AN INDEPENDENT TESTING AGENCY PER NEC (OR CEC-WHERE ADOPTED) 230.95(C). THE GROUND FAULT SYSTEM TEST SHALL BE PERFORMED IN THE PRESENCE OF THE LOCAL AUTHORITY HAVING JURISDICTION. VERIFICATION OF DEVICE SETTINGS PER THE POWER SYSTEMS STUDY SPECIFICATION SHALL BE PERFORMED BY THE SAME INDEPENDENT TESTING AGENCY. THE GROUND FAULT TEST RESULTS SHALL BE DELIVERED TO THE ENGINEER OF RECORD.
13. SEE POWER SYSTEMS STUDY SPECIFICATION, SHEET E-3.2, FOR ADDITIONAL REQUIREMENTS. ALL REQUIRED POWER SYSTEMS STUDIES MUST BE COMPLETED AND SUBMITTED WITH SWITCHGEAR SUBMITTAL. FAILURE TO DO SO WILL PREVENT THE ENGINEER FROM EFFECTIVELY EVALUATING THE SUBMITTAL AND SHALL RESULT IN REJECTION OF THE SWITCHGEAR SUBMITTAL AS INCOMPLETE.

GENERAL FEEDER SCHEDULE NOTES:

1. ALL FEEDERS SHOWN, UNLESS SPECIFICALLY NOTED OTHERWISE, ARE PRESUMED TO BE ROUTED IN METAL RACEWAYS. IF P.V.C. CONDUITS ARE UTILIZED, THE CONTRACTOR SHALL PROVIDE AN EQUIPMENT GROUND PER NEC, OR CEC WHERE ADOPTED, TABLE 250.122 OR, WHERE REQUIRED, PROVIDE A MAIN BONDING JUMPER PER TABLE 250.66 AND INCREASE THE CONDUIT SIZE ACCORDINGLY.
2. LOADS INDICATED WITH " ( ) " REPRESENT WORST CASE LOAD IN AMPS.
3. DISTANCE SHOWN IS FOR DESIGN PURPOSES ONLY. IT IS NOT A MATERIAL TAKEOFF.
4. VOLTAGE DROP VALUE INDICATED IS AT THE END OF THE FEEDER.
5. AVAILABLE FAULT CURRENT VALUE AT THE END OF THE FEEDER INDICATED. CALCULATIONS ARE BASED UPON INITIAL VALUES RECEIVED FROM THE SERVING UTILITY AND THE LENGTH AND IMPEDANCE OF THE FEEDER.

SPECIFIC SINGLE LINE NOTES:

1 SEE MAIN SYSTEM GROUNDING DETAIL OR FEEDER TO REMOTE BUILDING / STRUCTURE GROUNDING DETAIL, THIS SHEET, FOR MORE INFORMATION.

2 BUSSING SHALL BE PROVIDED FOR FUTURE BUS EXTENSION TO FUTURE DISTRIBUTION SYSTEM.

3 PROVIDE (1) 4" C.O. FOR EVERY 800 AMPS OF SERVICE SIZE (MINIMUM OF ONE) STUBBED OUTSIDE THE BUILDING TO THE NEAREST PLANTER AREA. CAP AND MARK.

4 PROVIDE (4) 1" C.O. STUBBED OUTSIDE THE BUILDING TO THE NEAREST PLANTER AREA. CAP AND MARK.

5 PROVIDE CIRCUIT BREAKER PER CEC 690.64 AND 705.12. SEE PV SINGLE LINE DIAGRAM, SHEET PV-??? FOR ADDITIONAL INFORMATION.

6 SEE PV SYSTEM DRAWINGS / SPECIFICATIONS FOR MORE INFORMATION.

7 PROVIDE CIRCUIT BREAKER TESTED/LISTED FOR BACK FEED OPERATION PER CEC WHERE ADOPTED, 690.59 AND 705.12.

LOAD CALCULATIONS:

MSB-1 =	57.6KVA
MSB-2 =	6.7KVA
MSB-3 =	9.6KVA
MSB-4 =	60.7KVA
MSB-5 =	83.2KVA
MSB-6 =	24.3KVA

TOTAL LOAD = 242.1KVA = 672.5A AT 208V, 3Ø

Copyright © 2025

All ideas, designs, arrangements and plans indicated or represented by this drawing are owned by, and the property of, NICHOLS, MELBURG and ROSSETTO and were created, evolved and developed for use on, and in conjunction with, the specified project. None of such ideas, designs, arrangements or plans shall be used by, or disclosed to any person, firm or corporation for any purpose whatsoever without the written permission of NICHOLS, MELBURG and ROSSETTO.

NICHOLS MELBURG & ROSSETTO
ARCHITECTS + ENGINEERS
300 KNOLLCREST DRIVE
REDDING, CA. 96002
(530) 222-3300 (530) 222-3538 FAX
http://www.nmrdesign.com

CONSULTANTS

tk1sc
Member of WSP
11870 Pierce Street, Suite 160
Riverside, California 92505
951.299.4160 www.tk1sc.com
Project Leader - Jerry Leonhardt
Electrical Lead - Jerry Leonhardt
WSP Job #: B2305166.000

LICENSE STAMPS

REGISTERED PROFESSIONAL ENGINEER
RAYMOND W. SWARTZ
No. E15610
Ex. 12/31/2025
ELECTRICAL
STATE OF CALIFORNIA

PROJECT NAME

TEHAMA COUNTY
CORNING
VETERAN'S HALL

1620 SOLANO ST.
CORNING, CA

SHEET TITLE

SINGLE LINE DIAGRAM

DRAWING STATUS

CONSTRUCTION DOCUMENTS

REVISIONS

Sym.	Description	Date

Drawn By	
Date Issued	2/13/2025
Scale	-
Project No.	21-6497

SHEET No.

E3.0

Login Name: USGL700366
Plot Date: February 13, 2025 - 9:30 am
File Name: P:\2023\B2305166.000 Corning Veterans Hall Remod\Drawings and Models\CAD\Electrical\E3-0.dwg
XREFS: x-CVH_Title Block

PANEL PA

MOUNTING	SURFACE	DOUBLE LUG	NO	VOLTS	120/208	MAIN	225A-3P
NEMA 3R	NO	200% NEUTRAL	NO	PHASE	3	BUS	225A
FEED THRU	NO	I/G BUS	NO	WIRE	4	A.I.C.	22,000

NOTES	LOCATION	A	B	C	LTG	CONV	KIT	RECP	MISC	BKR	CIRC	CIRC	BKR	MISC	RECP	KIT	CONV	LTG	A	B	C	LOCATION	NOTES
	BASEMENT RM 00	1080				X				20/1	1	2	20/1		X				300			SECURITY PNL RM 105	
	RMS 112/113.1/114		720			X				20/1	3	4	20/1			X				1200		KITCHEN 118 - REFRIG	
	RMS 112/113/115/116			900		X				20/1	5	6	20/1			X					1200	KITCHEN 118 - REFRIG	
	AUDITORIUM 110	720				X				20/1	7	8	20/1			X			360			KITCHEN 118	
	AUDITORIUM 110/EXTR		1080			X				20/1	9	10	20/1			X				360		KITCHEN 118	
	RMS 103/119/120/EXT			1080		X				20/1	11	12	20/1			X					180	KITCHEN 118 RANGE	
	RMS 101/119/120/EXT	1080				X				20/1	13	14	20/1						250			OFFICE 105 FACP	A,E
	OFFICE 105		720			X				20/1	15	16	20/1									SPARE	
	OFFICE 105			720		X				20/1	17	18	20/1								1200	WHEELCHAIR LIFT	
	OFFICE 105 DATA CAB	1500						X		20/1	19	20	20/1						540			R HVAC 203, STOR. 204	
	RMS 101/103/106/107		900			X				20/1	21	22	20/1							540		R STOR. 201, STOR. 202	
	RMS 103/104/109			900		X				20/1	23	24	20/1								540	R STOR. 201, STOR. 202	
	AUTOMATIC DOORS	750							X	20/1	25	26	20/1	X					600			AUDITORIUM MOTOR SHADES	
	SPARE									20/1	27	28	20/1	X						400		AUDITORIUM MOTOR SHADES	
	SPARE									20/1	29	30	20/1									SPARE	
	SPARE									20/1	31	32	20/1									SPARE	
	SPARE									20/1	33	34	20/1									SPARE	
	SPARE									20/1	35	36	20/1									SPARE	
	SPACE										37	38										SPACE	
	SPACE										39	40										SPACE	
	SPACE										41	42										SPACE	

A= 7180 VA — PHASE A LCL= 0 VA — PHASE A W/LCL= 7180 VA
B= 5920 VA — PHASE B LCL= 0 VA — PHASE B W/LCL= 5920 VA
C= 6720 VA — PHASE C LCL= 0 VA — PHASE C W/LCL= 6720 VA
TOTAL VA= 19820 — TOTAL LCL= 0 — AMPS= **55** — TOTAL VA W/LCL= 19820 — HIGH PHASE AMPS= **60**

PANEL PD

MOUNTING	SURFACE	DOUBLE LUG	NO	VOLTS	120/208	MAIN	400A-3P
NEMA 3R	NO	200% NEUTRAL	NO	PHASE	3	BUS	400A
FEED THRU	NO	I/G BUS	NO	WIRE	4	A.I.C.	22,000

NOTES	LOCATION	A	B	C	LTG	CONV	KIT	RECP	MISC	BKR	CIRC	CIRC	BKR	MISC	RECP	KIT	CONV	LTG	A	B	C	LOCATION	NOTES
	EF-1	370							X	15/3	1	2	35/2	X					2421			HP-1	
	-		370							-	3	4	-							2421		-	
	-			370						-	5	6	35/2	X							2421	HP-2	
	EF-3	180							X	15/1	7	8	-						2421			-	
	FC-7		510						X	15/2	9	10	35/2	X						2421		HP-3	
	-			510						-	11	12	-								2421	-	
	HP-7	1373							X	20/2	13	14	35/2	X					2421			HP-4	
	-		1373							-	15	16	-							2421		-	
	RTU-1			4035					X	45/3	17	18	35/2	X							2421	HP-5	
	-	4035								-	19	20	-						2421			-	
	-		4035							-	21	22	35/2	X						2421		HP-6	
	RTU-2			5764					X	60/3	23	24	-								2421	-	
	-	5764								-	25	26	20/1		X				540			ROOF RECEPTACLES	
	-		5764							-	27	28	20/1							540		LOW ROOF RECEPTACLES	
	RTU-3			5764					X	60/3	29	30	15/1	X							173	EF-2	
	-	5764								-	31	32	20/1									SPARE	
	-		5764							-	33	34	20/1									SPARE	
	MAU-1			375					X	15/3	35	36	20/1									SPARE	
	-	375								-	37	38										SPACE	
	-		375							-	39	40										SPACE	
	SPARE									20/1	41	42										SPACE	

A= 28085 VA — PHASE A LCL= 0 VA — PHASE A W/LCL= 28085 VA
B= 28415 VA — PHASE B LCL= 0 VA — PHASE B W/LCL= 28415 VA
C= 26675 VA — PHASE C LCL= 0 VA — PHASE C W/LCL= 26675 VA
TOTAL VA= 83175 — TOTAL LCL= 0 — AMPS= **231** — TOTAL VA W/LCL= 83175 — HIGH PHASE AMPS= **237**

PANEL KA

MOUNTING	SURFACE	DOUBLE LUG	NO	VOLTS	120/208	MAIN	150A-3P
NEMA 3R	NO	200% NEUTRAL	NO	PHASE	3	BUS	225A
FEED THRU	NO	I/G BUS	NO	WIRE	4	A.I.C.	10,000

NOTES	LOCATION	A	B	C	LTG	CONV	KIT	RECP	MISC	BKR	CIRC	CIRC	BKR	MISC	RECP	KIT	CONV	LTG	A	B	C	LOCATION	NOTES
	#1 ANSUL SYSTEM	100					1			20/1	1	2	20/3			1			1200			#9 STAND MIXER	
	#4 FRY DUMP STATION		756				1			20/1	3	4	–			1				1200		——	
	#5 COMBI OVEN			1500			1			20/1	5	6	–			1					1200	——	
	#8 MEAT SLICER	1130					1			20/1	7	8	20/2			1			1477			#16 ICE MAKER	
	#12 DISHWASER		2052				1			20/1	9	10	–			1				1477		——	
	SPARE									20/1	11	12	20/1			1					1140	#17 FREEZER	
	#20 REFRIGERATOR	648					1			20/1	13	14	20/3			1			312			#21 FOOD PROCESSOR	
	#22 ICE/SODA DISPENSER		360				1			20/1	15	16	–			1				312		——	
	#24 ICE CREAM MACHINE			1498			1			20/2	17	18	–			1					312	——	
	——	1498					1			–	19	20	60/3			1			5760			#3 FRYER	
	#1 HOOD		250				1			20/1	21	22	–			1				5760		——	
	# 26 WARMING STATION			1200			1			20/1	23	24	–			1					5760	——	
	#19 DELI STATION	460					1			20/1	25	26	20/1						540			CONV. RECEPTACLES	
	CONV. RECEPTACLES		720							20/1	27	28	20/1							540		CONV. RECEPTACLES	
	CONV. RECEPTACLES			720						20/1	29	30	20/1									SPARE	
	CONV. RECEPTACLES	540								20/1	31	32	20/1									SPARE	
	SPARE									20/1	33	34	20/1									SPARE	
	SPARE									20/1	35	36	20/1									SPARE	
	SPACE										37	38										SPACE	
	SPACE										39	40										SPACE	
	SPACE										41	42										SPACE	

A= 13665 VA — PHASE A LCL= 0 VA — PHASE A W/LCL= 13665 VA
B= 13427 VA — PHASE B LCL= 0 VA — PHASE B W/LCL= 13427 VA
C= 13330 VA — PHASE C LCL= 0 VA — PHASE C W/LCL= 13330 VA
TOTAL VA= 40422 — TOTAL LCL= 0 — AMPS= **112** — TOTAL VA W/LCL= 40422 — HIGH PHASE AMPS= **114**

KITCHEN DEMAND PER NEC 220-56	37362 VA	X	0.65 =	24285 VA	
NON-KITCHEN LOAD	3060 VA				
TOTAL	27345 VA	=	76 A	AT 120/208V-3PH-4W	

PANEL PB

MOUNTING	SURFACE	DOUBLE LUG	NO	VOLTS	120/208	MAIN	225A-3P
NEMA 3R	NO	200% NEUTRAL	NO	PHASE	3	BUS	225A
FEED THRU	NO	I/G BUS	NO	WIRE	4	A.I.C.	22,000

NOTES	LOCATION	A	B	C	LTG	CONV	KIT	RECP	MISC	BKR	CIRC	CIRC	BKR	MISC	RECP	KIT	CONV	LTG	A	B	C	LOCATION	NOTES
	BASEMENT LEVEL LTG	396			X					20/1	1	2	20/1						429			LTG EXTERIOR	
	LTG RM 111,113-118		827		X					20/1	3	4	20/1									SPARE	
	LTG RM 101-109,120			1113	X					20/1	5	6	20/1									SPARE	
	LTG AUDITORIUM 110	1380			X					20/1	7	8	20/1									SPARE	
	LTG AUDITORIUM 110		1380		X					20/1	9	10	20/1									SPARE	
	LTG RM 112,203,204			900	X					20/1	11	12	20/1									SPARE	
	LTG RM 201, 202	652			X					20/1	13	14	20/1									SPARE	
	LTG PARKING LOT		750		X					20/1	15	16	20/1									SPARE	
	LTG PARKING LOT			750	X					20/1	17	18	20/1									SPARE	
	LTG PARKING LOT	440			X					20/1	19	20	20/1									SPARE	
	SITE SIGNAGE		150		X					20/1	21	22										SPACE	
	STAGE LTG			450	X					20/1	23	24										SPACE	
	SPACE										25	26										SPACE	
	SPACE										27	28										SPACE	
	SPACE										29	30										SPACE	
	SPACE										31	32										SPACE	
	SPACE										33	34										SPACE	
	SPACE										35	36										SPACE	
	SPACE										37	38										SPACE	
	SPACE										39	40										SPACE	
	SPACE										41	42										SPACE	

A= 3297 VA — PHASE A LCL= 0 VA — PHASE A W/LCL= 3297 VA
B= 3107 VA — PHASE B LCL= 0 VA — PHASE B W/LCL= 3107 VA
C= 3213 VA — PHASE C LCL= 0 VA — PHASE C W/LCL= 3213 VA
TOTAL VA= 9617 — TOTAL LCL= 0 — AMPS= **27** — TOTAL VA W/LCL= 9617 — HIGH PHASE AMPS= **27**

PANEL PV

MOUNTING	SURFACE	DOUBLE LUG	NO	VOLTS	120/208	MAIN	M.L.O.
NEMA 3R	YES	200% NEUTRAL	NO	PHASE	3	BUS	225A
FEED THRU	NO	I/G BUS	NO	WIRE	4	A.I.C.	42,000

NOTES	LOCATION	A	B	C	LTG	CONV	KIT	RECP	MISC	BKR	CIRC	CIRC	BKR	MISC	RECP	KIT	CONV	LTG	A	B	C	LOCATION	NOTES
	EV CHARGER	3600								40/2	1	2	40/2						3600			EV CHARGER	
	-		3600							-	3	4	-							3600		-	
	EV CHARGER			3600						40/2	5	6	40/2								3600	EV CHARGER	
	-	3600								-	7	8	-						3600			-	
	EV CHARGER		3600							40/2	9	10	40/2							3600		EV CHARGER(FUTURE)	
	-			3600						-	11	12	-								3600	-	
	EV CHARGER	3600								40/2	13	14	40/2						3600			EV CHARGER(FUTURE)	
	-		3600							-	15	16	-							3600		-	
	SPACE										17	18										SPACE	
	SPACE										19	20										SPACE	
	SPACE										21	22										SPACE	
	SPACE										23	24										SPACE	

A= 21600 VA — PHASE A LCL= 0 VA — PHASE A W/LCL= 21600 VA
B= 21600 VA — PHASE B LCL= 0 VA — PHASE B W/LCL= 21600 VA
C= 14400 VA — PHASE C LCL= 0 VA — PHASE C W/LCL= 14400 VA
TOTAL VA= 57600 — TOTAL LCL= 0 — AMPS= **160** — TOTAL VA W/LCL= 57600 — HIGH PHASE AMPS= **180**

PANEL PC

MOUNTING	SURFACE	DOUBLE LUG	NO	VOLTS	120/208	MAIN	225A-3P
NEMA 3R	NO	200% NEUTRAL	NO	PHASE	3	BUS	225A
FEED THRU	NO	I/G BUS	NO	WIRE	4	A.I.C.	22,000

NOTES	LOCATION	A	B	C	LTG	CONV	KIT	RECP	MISC	BKR	CIRC	CIRC	BKR	MISC	RECP	KIT	CONV	LTG	A	B	C	LOCATION	NOTES
	FC-1	716							X	15/2	1	2	15/2	X					716			FC-4	
	-		716							-	3	4	-							716		-	
	FC-1 HEATER			4066					X	50/2	5	6	50/2	X							4066	FC-4 HEATER	
	-	4066								-	7	8	-						4066			-	
	FC-2		716						X	15/2	9	10	15/2	X						716		FC-5	
	-			716						-	11	12	-								716	-	
	FC-2 HEATER	4066							X	50/2	13	14	50/2	X					4066			FC-5 HEATER	
	-		4066							-	15	16	-							4066		-	
	FC-3			716					X	15/2	17	18	15/2	X							716	FC-6	
	-	716								-	19	20	-						716			-	
	FC-3 HEATER		4066						X	50/2	21	22	50/2	X						4066		FC-6 HEATER	
	-			4066						-	23	24	-								4066	-	
	EF-2	173							X	15/1	25	26	15/1	X					164			AUDITORIUM FANS	
A	WH-1		1500						X	25/1	27	28	20/1									SPARE	
-	-			1500						-	29	30	20/1									SPARE	
	SPARE									20/1	31	32	20/1									SPARE	
	SPARE									20/1	33	34	20/1									SPARE	
	SAPCE										35	36										SPACE	
	SPACE										37	38										SPACE	
	SPACE										39	40										SPACE	
	SPACE										41	42										SPACE	

A= 19464 VA — PHASE A LCL= 0 VA — PHASE A W/LCL= 19464 VA
B= 20628 VA — PHASE B LCL= 0 VA — PHASE B W/LCL= 20628 VA
C= 20628 VA — PHASE C LCL= 0 VA — PHASE C W/LCL= 20628 VA
TOTAL VA= 60720 — TOTAL LCL= 0 — AMPS= **169** — TOTAL VA W/LCL= 60720 — HIGH PHASE AMPS= **172**

AS-BUILT PANEL DIRECTORY NOTE:

BRANCH CIRCUIT LOCATIONS NOTED WITH "(E)" INDICATE EXISTING CIRCUIT(S). THE IDENTITIES OF THESE CIRCUITS ARE BASED ON EXISTING PANEL DIRECTORIES AND/OR LIMITED AS-BUILT INFORMATION. CONTRACTOR SHALL FIELD VERIFY EACH BRANCH CIRCUIT AND PROVIDE COMPLETE, TYPED AS-BUILT PANEL DIRECTORIES AS REQUIRED THAT DISTINGUISH EACH CIRCUIT PER NEC, OR CEC WHERE ADOPTED, ART 408.1 AND 408.4. COMPLETED DIRECTORIES SHALL BE SUBMITTED TO THE ELECTRICAL INSPECTOR PRIOR TO FINAL ELECTRICAL INSPECTION. INCLUDE ALL COSTS IN BID.

Login Name: USGL700366
Plot Date: February 13, 2025 - 9:32 am
File Name: P:\2023\B2305166.000 Corning Veterans Hall Remod\Drawings and Models\CAD\Electrical\E3-1.dwg
XREFS: x-CVH_Title Block

GENERAL PANEL SCHEDULE NOTES:

1. WHERE PANEL IS INDICATED TO INCLUDE FEED THRU LUGS, PROVIDE FEED THROUGH LUGS AT THE OPPOSITE END OF THE PANELBOARD FROM THE PANELBOARD MAIN LUGS.
2. WHERE PANEL IS INDICATED TO INCLUDE DOUBLE LUGS, PROVIDE A DOUBLE LUG KIT AT THE SAME END OF THE PANELBOARD AS THE PANELBOARD MAIN LUGS.
3. WHERE PANEL IS INDICATED TO INCLUDE 200% NEUTRAL, PROVIDE PANELBOARDS UL LISTED AS HAVING NEUTRAL BUSSES RATED TO CARRY 200 PERCENT OF THE CURRENT CARRYING CAPACITY OF THE PHASE BUSSING. OTHERWISE, NEUTRAL BUSSING TO BE FULL SIZE AND RECTANGULAR.
4. WHERE PANEL IS INDICATED TO INCLUDE AN I/G BUS, PROVIDE PANELBOARDS WITH AN ISOLATED GROUND BUS, DRILLED AND TAPPED FOR NUMBER OF ISOLATED GROUND CONDUCTORS SHOWN, AS WELL AS FOR ALL SPARES AND SPACES SHOWN ON THE PANELBOARD.
5. WHERE PANEL CIRCUIT BREAKER RATING IS SHOWN AS SERIES RATED, PROVIDE CIRCUIT BREAKERS IN PANELBOARD WHICH ARE SERIES RATED WITH THE UPSTREAM SYSTEM FOR THE AVAILABLE FAULT CURRENT. THE PANELBOARD SHALL BE MARKED WITH THE SERIES CONNECTED RATINGS, AS WELL AS ALL MARKING AS REQUIRED BY THE NEC, OR CEC WHERE ADOPTED, 240.86(B).
6. WHERE PANEL IS INDICATED AS RECESSED OR FLUSH MOUNTED, PROVIDE SPARE CONDUITS STUBBED UP INTO THE ACCESSIBLE CEILING SPACE. PROVIDE ONE (1) 3/4" CONDUIT ONLY FOR EACH THREE (3) SPARES OR SPACES, MINIMUM OF TWO (2). EACH CONDUIT SHALL BE TAGGED, CAPPED AND MARKED FOR FUTURE USE.
7. ALL BUSSING SHALL BE TIN PLATED ALUMINUM.
8. ALL CIRCUIT BREAKERS USED AS SWITCHES SHALL BE UL LISTED AND LABELED "SWD" FOR SWITCHING DUTY.
9. PROVIDE BREAKER INTERLOCK WITH ADJACENT BREAKER(S) FOR ANY MULTI-WIRE BRANCH CIRCUIT. BREAKER INTERLOCK GROUPING SHALL BE BY BRANCH CIRCUIT GROUP (i.e. MULTIPLE CIRCUITS SHARING A COMMON NEUTRAL (NEC, OR CEC WHERE ADOPTED, 210.4(B),) COMMON YOKE (NEC, OR CEC WHERE ADOPTED, 210.7), OR FURNITURE SYSTEM NEC OR CEC WHERE ADOPTED, 605.5 AND 605.7). WHERE AN EXISTING PANEL IS BEING ALTERED OR MODIFIED IN ANY WAY, CONTRACTOR SHALL INCLUDE ALL COSTS IN BASE BID TO ADD BREAKER INTERLOCKS TO EXISTING MULTI-WIRE BRANCH CIRCUITS BASED ON CONTRACTOR'S INVESTIGATION OF EXISTING CONDITIONS.
10. PROVIDE BREAKER LOCK OFF DEVICE ON ANY CIRCUIT BREAKER FEEDING A TRANSFORMER AS REQUIRED, PER NEC, OR CEC WHERE ADOPTED, 450.14. WHERE AN EXISTING PANEL IS BEING ALTERED OR MODIFIED IN ANY WAY, CONTRACTOR SHALL INCLUDE ALL COSTS IN BASE BID TO ADD BREAKER LOCK-OFF DEVICES TO EXISTING TRANSFORMER CIRCUIT BREAKERS BASED ON CONTRACTOR'S INVESTIGATION OF EXISTING CONDITIONS.
11. ALL CIRCUIT BREAKERS SHALL BE BOLT-ON TYPE AND SHALL BE SUITABLE FOR 75 DEGREE AMPACITY CONDUCTORS.
12. PANELS SHALL BE OF THE DEAD FRONT SAFETY TYPE. PANELS SHALL BE MINIMUM 20" WIDE AND 5-3/4" DEEP UNLESS OTHERWISE NOTED ON PLAN.
13. COORDINATE WITH APPLICABLE TRADE TO INSURE RECESSED MOUNTED PANELBOARDS WILL SEAT FLUSH IN THE WALLS PROVIDED. PANEL TRIMS SHALL HAVE CONCEALED DOORS AND FASTENERS WITH FLUSH TYPE COMBINATION LOCK AND CATCH, TWO MILLED TYPE KEYS SUPPLIED WITH EACH PANEL. ALL LOCKS SHALL BE KEYED ALIKE AND EACH DOOR SHALL HAVE A PLASTIC COVERED DIRECTORY FRAME WITH A TYPED IDENTIFICATION CARD OF ALL CIRCUIT AND PANEL NUMBERS FOR BRANCH CIRCUIT PANELBOARDS.
14. UPON PROJECT COMPLETION, CONTRACTOR SHALL INSTALL TYPED AS-BUILT PANEL DIRECTORIES IN EACH PANEL WITHIN THE MFGR-PROVIDED DIRECTORY HOLDER. THE DIRECTORY SHALL CLEARLY IDENTIFY EACH CIRCUIT TO ITS CLEAR, EVIDENT, AND SPECIFIC PURPOSE OR USE. EACH CIRCUIT IDENTITY SHALL INCLUDE SUFFICIENT DETAIL TO ALLOW EACH CIRCUIT TO BE DISTINGUISHED FROM ALL OTHERS PER NEC, OR CEC WHERE ADOPTED, ART 408.1 AND 408.4. HANDWRITTEN DIRECTORIES ARE UNACCEPTABLE. COPIES OF AS-BUILT PANEL SCHEDULES SHALL BE PLACED IN PANEL DIRECTORIES. E.C. TO INCLUDE ALL COSTS REQUIRED FOR LARGER-THAN-STANDARD CUSTOM PANEL DIRECTORY HOLDERS TO ACCOMMODATE COPIES OF AS-BUILT PANEL SCHEDULES.
15. PANELBOARDS SHALL BE MANUFACTURED BY G.E., CUTLER-HAMMER, SIEMENS, OR SQUARE "D". FUSED PANEL BOARDS SHALL BE BY COOPER BUSSMANN.
16. PROVIDE SHOP DRAWING SUBMITTAL PER THE ELECTRICAL SPECIFICATION SUBMITTAL REQUIREMENTS FOR EACH PANEL DEPICTING CONFORMANCE WITH THE ABOVE NOTES AND SCHEDULES.

SPECIFIC PANEL SCHEDULE NOTES:

"A" PROVIDE LOCK-ON DEVICE.

"B" PROVIDE PERMANENT LOCK-OFF DEVICE THAT SHALL REMAIN IN PLACE WITH OR WITHOUT THE LOCK INSTALLED, PER NEC, OR CEC WHERE ADOPTED, SECTION 110.25.

"C" PROVIDE SHUNT TRIP DEVICE.

"D" PROVIDE GFCI TYPE DEVICE.

"E" PROVIDE A RED CIRCUIT BREAKER.

"F" PROVIDE A NEW BREAKER TO MATCH THE EXISTING IN PANEL.

"G" EXISTING BREAKER WITH NEW LOAD.

"H" PROVIDE AFCI TYPE DEVICE COMPLYING WITH NEC, OR CEC WHERE ADOPTED, 210.12(A),(B),(C).

PANEL SCHEDULE INDEX		
PA	PD	KA
PB	EV	-
PC	-	

Copyright © 2025

All ideas, designs, arrangements and plans indicated or represented by this drawing are owned by, and the property of, NICHOLS, MELBURG and ROSSETTO and were created, evolved and developed for use on, and in conjunction with, the specified project. None of such ideas, designs, arrangements or plans shall be used by, or disclosed to any person, firm or corporation for any purpose whatsoever without the written permission of NICHOLS, MELBURG and ROSSETTO.

NICHOLS MELBURG ROSSETTO
ARCHITECTS + ENGINEERS
300 KNOLLCREST DRIVE
REDDING, CA. 96002
(530) 222-3300 (530) 222-3538 FAX
http://www.nmrdesign.com

CONSULTANTS

tk1sc
Member of WSP
11870 Pierce Street, Suite 160
Riverside, California 92505
951.299.4160 www.tk1sc.com
Project Leader - Jerry Leonhardt
Electrical Lead - Jerry Leonhardt
WSP Job #: B2305166.000

LICENSE STAMPS

REGISTERED PROFESSIONAL ENGINEER
RAYMOND W. SWARTZ
No. E15610
Ex. 12/31/2025
ELECTRICAL
STATE OF CALIFORNIA

PROJECT NAME

TEHAMA COUNTY
CORNING
VETERAN'S HALL

1620 SOLANO ST.
CORNING, CA

SHEET TITLE

PANEL
SCHEDULES

DRAWING STATUS

CONSTRUCTION
DOCUMENTS

REVISIONS

Sym.	Description	Date

Drawn By	
Date Issued	2/13/2025
Scale	-
Project No.	21-6497

SHEET No.

E3.1

POWER SYSTEMS STUDY SPECIFICATIONS:

THE CONTRACTOR SHALL PROVIDE, WITH THE ASSISTANCE OF THE SWITCHGEAR MANUFACTURER, POWER SYSTEMS STUDIES CONSISTING OF A SHORT CIRCUIT STUDY, A COORDINATION STUDY, AND AN ARC FLASH STUDY - ALL PER LATEST PUBLISHED EDITIONS OF THE FOLLOWING STANDARDS: ANSI C37, IEEE 141, IEEE 242, IEEE 399 - BROWN BOOK, NFPA 70E AND IEEE STD 1584/1584a. ADDITIONALLY:

a. CONTRACTOR SHALL PERFORM STUDY USING SKM "SYSTEMS ANALYSIS POWER TOOLS FOR WINDOWS" COMPUTER SOFTWARE PROGRAM - LATEST AVAILABLE VERSION OR EQUAL BY ETAP.

b. CONTRACTOR SHALL FURNISH/OBTAIN ALL DATA REQUIRED FOR POWER SYSTEMS STUDIES. DATA COLLECTION EFFORT SHALL BE PERFORMED IN AN EXPEDITIOUS MANNER AND AS SOON AS POSSIBLE AFTER CONTRACT AWARD TO ENSURE STUDY COMPLETION FOR SUBMISSION AS PART OF THE ELECTRICAL DISTRIBUTION EQUIPMENT SHOP DRAWINGS AND SUBMITTALS. DATA COLLECTION EFFORTS MAY INCLUDE, BUT ARE NOT LIMITED TO, CALCULATED UTILITY COMPANY FAULT VALUES, SERVICE TRANSFORMER PRIMARY PROTECTIVE DEVICE AND APPLIED VOLTAGE, ELECTRICAL CHARACTERISTICS AND FAULT CONTRIBUTION FROM EXISTING MOTORS/GENERATORS, EXISTING CONDUCTOR QUANTITIES, SIZE AND LENGTHS, EXISTING/ NEW OVERCURRENT PROTECTIVE DEVICE SPECIFICATIONS AND PART NUMBERS, TRANSFER SWITCH CHARACTERISTICS AND SHORT CIRCUIT CURRENT RATINGS IN ADDITION TO ANY OTHER DATA REQUIRED TO PERFORM COMPREHENSIVE POWER SYSTEM STUDIES. RANGES OF FAULT CURRENT VALUES OR GENERIC FAULT CURRENT VALUES PROVIDED BY THE UTILITY COMPANY ARE UNACCEPTABLE AS ARE ANY FAULT CURRENT VALUES SHOWN ON THE SINGLE LINE DIAGRAM OR FEEDER SCHEDULE.

   DATA GATHERING SHALL BE CONDUCTED IN A SAFE MANNER WITH 1) EQUIPMENT COMPLETELY DE-ENGERIZED IN COORDINATION WITH THE OWNER DURING A SCHEDULED POWER SHUTDOWN OR 2) UTILIZING A LICENSED ELECTRICIAN WEARING APPROPRIATE PERSONNEL PROTECTIVE EQUIPMENT PER NFPA 70E STANDARDS.

   CONTRACTOR IS SOLELY RESPONSIBLE FOR OBTAINING UTILITY DATA FROM THE UTILITY COMPANY - INCLUDE ALL COSTS IN BASE BID FOR ANY UTILITY COMPANY FEES FOR PROVIDING NECESSARY DATA. WHERE THE PROJECT IS LOCATED ON A CAMPUS WITH AN OWNER-FURNISHED ELECTRICAL DISTRIBUTION SYSTEM, CONTRACTOR SHALL BE RESPONSIBLE TO OBTAIN SUFFICIENT ELECTRICAL SYSTEM DATA TO DEMONSTRATE COORDINATION OF THE PROJECT'S ELECTRICAL SYSTEM WITH CAMPUS DISTRIBUTION SYSTEM. THIS DATA MAY BE AVAILABLE IN THE FORM OF AN OWNER-PROVIDED CAMPUS POWER SYSTEM STUDY. WHERE SUCH STUDIES ARE NOT AVAILABLE, THE CONTRACTOR SHALL INCLUDE ALL COSTS IN BASE BID TO PERFORM NECESSARY FIELD INVESTIGATION OF CAMPUS DISTRIBUTION SYSTEM INCLUDING CAMPUS SERVICE ENTRANCE AND SERVING UTILITY DATA AS REQUIRED TO DEMONSTRATE COORDINATION OF THE PROJECT'S ELECTRICAL SYSTEM WITH CAMPUS DISTRIBUTION SYSTEM. INCLUDE ALL COSTS FOR RECOMMENDING ADJUSTMENTS TO EXISTING CAMPUS DISTRIBUTION SYSTEM SETTINGS DISCOVERED TO BE INCORRECT. OWNER SHALL BE RESPONSIBLE TO UNDERTAKE ANY PHYSICAL ADJUSTMENTS TO EXISTING MEDIUM OR HIGH VOLTAGE DISTRIBUTION EQUIPMENT WITH THE EXCEPTION OF FUSES, RELAYS OR OTHER CIRCUIT PROTECTIVE DEVICES LOCATED IN EXISTING DISTRIBUTION EQUIPMENT THAT ARE DEDICATED TO SERVE ONLY THIS PROJECT'S ELECTRICAL SYSTEM.

   CONTRACTOR IS SOLELY RESPONSIBLE FOR OBTAINING EQUIPMENT SCCR RATING FROM ALL OTHER PROJECT TRADES AND FOR ANY OWNER-FURNISHED OR TENANT-FURNISHED EQUIPMENT CONNECTED TO THE ELECTRICAL SYSTEM IN ORDER TO VALIDATE AVAILABLE FAULT CURRENT AT THE EQUIPMENT CONNECTIONS IS LESS THAN THE RESPECTIVE EQUIPMENT SCCR.

c. THE SHORT CIRCUIT STUDY SHALL INCLUDE CALCULATED SHORT-CIRCUIT MOMENTARY AND INTERRUPTING DUTIES FOR 3-PHASE BOLTED FAULTS AND LINE-TO-GROUND FAULTS THROUGHOUT THE SINGLE LINE TO INCLUDE UTILITY SERVICE SUPPLY, GENERATORS AND TRANSFER SWITCHES, SUBSTATIONS, SWITCHGEAR, PANEL BOARDS ETC. STUDY SHALL EVALUATE ALL ELECTRICAL DISTRIBUTION EQUIPMENT AND PROTECTIVE DEVICES AGAINST SHORT CIRCUIT CURRENT RATINGS. THIS STUDY EFFORT SHALL EXTEND TO SCCR RATINGS OF EQUIPMENT, EQUIPMENT CONTROL PANELS, VARIABLE FREQUENCY DRIVES ETC PROVIDED BY OTHER TRADES THAT ARE CONNECTED TO THE ELECTRICAL SYSTEM. NOTE ANY EXISTING CIRCUIT PROTECTIVE DEVICE(S)/ELECTRICAL DISTRIBUTION THAT IS INADEQUATELY RATED TO WITHSTAND CALCULATED FAULT VALUES OR WHERE EQUIPMENT SCCR IS EXCEEDED. WHERE THE UTILITY COMPANY PROVIDES MULTIPLE FAULT CURRENT VALUES REFLECTING INITIAL TRANSFORMER CAPACITY AND WORST CASE TRANSFORMER CAPACITY, THE CONTRACTOR SHALL PROVIDE SHORT CIRCUIT ANALYSIS PRIMARILY BASED ON WORST CASE TRANSFORMER CAPACITY. ALL SERVICE EQUIPMENT SHALL BE LABELED WITH THE MAXIMUM AVAILABLE FAULT CURRENT AND FAULT CURRENT CALCULATION DATE PER NEC (OR CEC WHERE ADOPTED) 110.24. SEE LABELING SPECIFICATION FOR ADDITIONAL REQUIREMENTS.

d. THE COORDINATION STUDY SHALL INCLUDE TIME-CURRENT CURVES (TCC) FOR OVER CURRENT PROTECTIVE DEVICES (OCPDs) ALONG WITH TRANSFORMER FULL-LOAD CURRENT, INRUSH CURRENT, AND THROUGH-FAULT PROTECTION CURVES, CONDUCTOR DAMAGE CURVES, GROUND FAULT PROTECTIVE DEVICE CURVES, MOTOR STARTING CURVE(S)/DAMAGE POINT(S), GENERATOR SHORT-CIRCUIT CURVE(S) /DAMAGE POINT(S) ETC. - CLEARLY IDENTIFIED AND PLOTTED ON LOG-LOG SCALE GRAPH(S). TCC GRAPH(S) SHALL INCLUDE A ONE-LINE DIAGRAM IDENTIFYING THE SPECIFIC PORTION COVERED BY THE GRAPH. DEMONSTRATE THAT ADEQUATE CLEARING TIME/SELECTIVE OPERATION EXISTS BETWEEN PROTECTIVE DEVICES WHILE PROVIDING PROPER SYSTEM PROTECTION & COORDINATION. STUDY SHALL INCLUDE ALL MAIN AND FEEDER OCPDs INCLUDING SECONDARY SIDE OF EACH TRANSFORMER DOWN TO BREAKERS IN PANEL BOARDS AND INDIVIDUAL BREAKERS IN DISTRIBUTION BOARDS. IN ALL CASES, SOLID STATE AND/OR ADJUSTABLE OCPDs SHALL BE ANALYZED WITH UPSTREAM AND DOWNSTREAM OCPDs AS REQUIRED TO ESTABLISH PROPER COORDINATION SETTINGS. SPECIAL EMPHASIS SHALL BE PLACED ON ANALYZING PORTIONS OF THE ELECTRICAL SYSTEM REQUIRING SELECTIVE COORDINATION WHICH INCLUDE, BUT ARE NOT LIMITED TO, NEC (OR CEC WHERE ADOPTED) ARTICLES 517, 620, 700, 701 & 708; ALONG WITH ANY ARTICLE 702 OPTIONAL STANDBY SYSTEMS SERVING SERVER ROOMS/DATA CENTERS OR OTHER AREAS REQUIRING HIGH AVAILABILITY/PROPER COORDINATION SUCH AS MANUFACTURING, CLEAN ROOM OR LAB FACILITIES. CONTRACTOR SHALL BE RESPONSIBLE TO RECOMMEND SETTINGS OF ALL DEVICES, TO INCLUDE GROUND FAULT SETTINGS, TO ACHIEVE SYSTEM COORDINATION. THE CONTRACTOR SHALL FIELD ADJUST NEW AND EXISTING DEVICES ACCORDINGLY UTILIZING A QUALIFIED MANUFACTURER'S REPRESENTATIVE OR A THIRD-PARTY ELECTRICAL TESTING AGENCY.

e. THE ARC FLASH ANALYSIS SHALL BE BASED ON THE INCIDENT ENERGY ANALYSIS METHOD (NFPA 70E 130.5). THE ARC FLASH ANALYSIS SHALL DETERMINE THE FLASH BOUNDARY, THE WORKING DISTANCE, THE INCIDENT ENERGY AND MINIMUM ARC RATING OF CLOTHING(CAL/CM²) AT LOCATIONS IN THE ELECTRICAL SYSTEM WHERE WORK CAN OR MIGHT BE PERFORMED ON ENERGIZED COMPONENTS WHERE MULTIPLE SYSTEM CONFIGURATION SCENARIOS ARE POSSIBLE, THE CONFIGURATION WITH GREATEST INCIDENT ENERGY MUST BE SHOWN. DECREMENT FAULT CONTRIBUTIONS FROM MOTOR(S) AND GENERATOR(S) BASED ON INDUSTRY STANDARDS. THE CONTRACTOR SHALL MAKE RECOMMENDATIONS WITH REGARD TO SYSTEM ADJUSTMENTS OR OTHER MITIGATION MEASURES TO OPTIMIZE THE RESULTS OF THE STUDY AS IT RELATES TO SAFE AND RELIABLE ELECTRICAL SYSTEM OPERATION (E.G. OVERCURRENT DEVICE SETTINGS, WORKING DISTANCES, CURRENT LIMITING DEVICES). THIS INCLUDES MITIGATION, WHERE POSSIBLE, OF INCIDENT ENERGY LEVELS THAT EXCEED 40 CAL/CM². PERFORM ITERATIVE CALCULATIONS TO DEMONSTRATE EFFECTS OF OPENING PROTECTIVE DEVICES UTILIZING A VARIETY OF DIFFERENT SETTINGS TO BEST MITIGATE ARC FLASH ENERGY WHILE MAINTAINING AN ACCEPTABLE LEVEL OF SYSTEM COORDINATION. WHERE SUCH RECOMMENDATIONS COMPROMISE SELECTIVE COORDINATION SETTINGS, SO STATE IN THE ANALYSIS.

   INCLUDE INCIDENT ENERGY/FLASH PROTECTION BOUNDARY CALCULATIONS FOR BOTH LINE/LOAD SIDE OF ALL SEPARATELY ENCLOSED MAIN CIRCUIT BREAKERS. ALL CALCULATIONS SHALL BE BASED ON ACTUAL OVERCURRENT DEVICE CLEARING TIMES.

f. BASED ON THE RESULTS OF THE ARC FLASH ANALYSIS, THE CONTRACTOR SHALL PRODUCE AND INSTALL A WARNING LABEL (ORANGE <40 CAL/CM2) OR DANGER LABEL (RED > 40 CAL/CM2) FOR EACH PIECE OF EQUIPMENT PER NEC (OR CEC WHERE ADOPTED) 110.16 AND IN ACCORDANCE WITH ANSI Z535.4-2007 OR LATEST PUBLISHED EDITION. THE LABEL MUST BE READABLE IN BOTH INDOOR AND OUTDOOR ENVIRONMENTS FOR AT LEAST 3 YEARS AND CONTAIN THE FOLLOWING INFORMATION: NOMINAL SYSTEM VOLTAGE, ARC HAZARD BOUNDARY (INCHES), WORKING DISTANCE (INCHES), AVAILABLE ARC FLASH INCIDENT ENERGY AT THE WORKING DISTANCE (CAL/CM²), MINIMUM ARC RATING OF CLOTHING, EQUIPMENT/BUS NAME, DATE PREPARED, SUPPLIER'S NAME AND ADDRESS. PROVIDE LABEL AS MANUFACTURED BY BRADY OR EQUAL. PRIOR TO PLACING ARC FLASH LABELS, CONTRACTOR SHALL SET ALL PROTECTIVE DEVICE SETTINGS PER THE APPROVED COORDINATION STUDY.

g. DURING THE CONSTRUCTION PHASE OF THE PROJECT, ALL GROUND FAULT RELAYS SHALL BE SET AT THE LOWEST AVAILABLE TIME DELAY AND PICK-UP SETTINGS.

h. POWER SYSTEMS STUDIES SHALL BE SUBMITTED AS PART OF THE OVERALL SWITCHGEAR SUBMITTAL. THE RESULTS OF THE POWER SYSTEMS STUDY SHALL BE PRESENTED IN A COMPREHENSIVE REPORT THAT INCLUDES:

   - REPORT SUMMARY WITH ANALYSIS METHODOLOGY, FINDINGS AND RECOMMENDATIONS
   - SUMMARY OF INPUT DATA FOR UTILITY SOURCE, EQUIPMENT AND CABLES
   - AVAILABLE FAULT CURRENT AT EACH EQUIPMENT LOCATION WITH COMPARISON TO EQUIPMENT RATING
   - OVERCURRENT DEVICE SETTINGS (E.G. PICK-UP, TIME DELAY, CURVE), "AS FOUND" AND "AS RECOMMENDED"
   - OVERCURRENT DEVICE COORDINATION CURVES INCLUDING RELATED SECTION OF THE SINGLE-LINE DIAGRAM
   - COMPLETE SYSTEM SINGLE-LINE DIAGRAM FOR THE SYSTEM ANALYZED
   - INCIDENT ENERGY LEVEL (CAL/CM²) FOR EACH EQUIPMENT LOCATION, RECOMMENDED PPE AND SAMPLE ARC FLASH WARNING LABELS
   - A DVD OR CD CONTAINING ELECTRONIC PROJECT FILES USED TO DEVELOP THE STUDY TO INCLUDE SKM OR ETAP PROJECT AND REFERENCE LIBRARY FILES. ALL FILES SHALL BE AVAILABLE FOR REVIEW AND/OR FUTURE MODIFICATION WITHOUT LIMITATION. LOCKING OR SECURING FILES BY OTHER MEANS IS NOT ACCEPTABLE. FAILURE TO SUBMIT COMPLETE STUDIES AND FULLY ACCESSIBLE FILES SHALL RESULT IN THE REJECTION OF THE ENTIRE SWITCHGEAR SUBMITTAL.

i. AS A PART OF A CLOSEOUT SUBMITTAL TO BE SUBMITTED TO THE ENGINEER PRIOR TO FINAL PROJECT CONSTRUCTION OBSERVATIONS, CONTRACTOR SHALL PROVIDE PHOTOS OF ALL ADJUSTABLE CIRCUIT BREAKERS DEPICTING THEIR FINAL SETTINGS BASED ON THE POWER SYSTEMS STUDY. SUBMITTAL SHALL BE ORGANIZED WITH OCPD IDENTIFICATION, OCPD PHOTO IMAGE AND RESPECTIVE POWER SYSTEM STUDY OCPD SETTING REQUIREMENTS TO ALLOW EFFICIENT CONFIRMATION OF RECORD SETTINGS. PLEASE NOTE THAT IMAGES MAY NEED TO BE TAKEN PRIOR TO INSTALLATION OF EQUIPMENT COVERS/EQUIPMENT ENERGIZATION SINCE OCPD SETTINGS MAY BE OBSTRUCTED BY EQUIPMENT COVERS.

j. THE STUDY SHALL INCLUDE ALL PORTIONS OF ELECTRICAL SINGLE LINE DIAGRAM TO INCLUDE UPSTREAM OR DOWNSTREAM ELEMENTS THAT MAY NOT BE SHOWN INCLUDING, BUT NOT LIMITED TO, UTILITY SOURCE CONTRIBUTION, RELEVANT PORTIONS OF THE EXISTING ELECTRICAL DISTRIBUTION SYSTEM WITHIN A BUILDING AND/OR CAMPUS ELECTRICAL DISTRIBUTION SYSTEMS AS DESCRIBED ABOVE.

Login Name: USGL700366
Plot Date: February 13, 2025 - 9:32 am
File Name: P:\2023\B2305166.000 Corning Veterans Hall Remod\Drawings and Models\CAD\Electrical\E3-2.dwg
XREFS: x-CVH_Title Block

Copyright © 2025

All ideas, designs, arrangements and plans indicated or represented by this drawing are owned by, and the property of, NICHOLS, MELBURG and ROSSETTO and were created, evolved and developed for use on, and in conjunction with, the specified project. None of such ideas, designs, arrangements or plans shall be used by, or disclosed to any person, firm or corporation for any purpose whatsoever without the written permission of NICHOLS, MELBURG and ROSSETTO.

NICHOLS MELBURG & ROSSETTO
ARCHITECTS + ENGINEERS
300 KNOLLCREST DRIVE
REDDING, CA. 96002
(530) 222-3300 (530) 222-3538 FAX
http://www.nmrdesign.com

CONSULTANTS

tk1sc
Member of WSP
11870 Pierce Street, Suite 160
Riverside, California 92505
951.299.4160 www.tk1sc.com

Project Leader - Jerry Leonhardt
Electrical Lead - Jerry Leonhardt
WSP Job #: B2305166.000

LICENSE STAMPS

REGISTERED PROFESSIONAL ENGINEER
RAYMOND W. SWARTZ
No. E15610
Ex. 12/31/2025
ELECTRICAL
STATE OF CALIFORNIA

PROJECT NAME

TEHAMA COUNTY
CORNING
VETERAN'S HALL

1620 SOLANO ST.
CORNING, CA

SHEET TITLE

POWER
SYSTEMS STUDY

DRAWING STATUS

CONSTRUCTION
DOCUMENTS

REVISIONS

Sym.	Description	Date

Drawn By	
Date Issued	2/13/2025
Scale	-
Project No.	21-6497

SHEET No.

E3.2

LIGHTING FIXTURE SCHEDULE NOTES:

A. GENERAL NOTES:

1. THE LIGHTING FIXTURES, LAMPS, BALLASTS, POWER SUPPLIES, DRIVERS AND TRANSFORMERS FOR THIS PROJECT HAVE BEEN SPECIFIED TO ENSURE THAT SPECIFIC AESTHETIC AND PERFORMANCE REQUIREMENTS WILL BE SATISFIED. THESE PRODUCTS HAVE BEEN CAREFULLY RESEARCHED AND EACH SPECIFIED ITEM HAS UNIQUE QUALITIES WHICH WERE DETERMINED TO BE ESSENTIAL IN SATISFYING THE OWNER'S, ARCHITECT'S, ENGINEER'S AND LIGHTING CONSULTANT'S DESIGN CRITERIA.
2. CONTRACTOR SHALL PROVIDE ALL MATERIALS AS DETAILED ON DRAWINGS AND/OR SCHEDULES, AND LABOR AS REQUIRED TO ACHIEVE A COMPLETE AND OPERATING LIGHTING SYSTEM.
3. CONTRACTOR SHALL NOTIFY THE ELECTRICAL ENGINEER AND/OR LIGHTING CONSULTANT OF ANY PROVISIONS OF THE SPECIFICATION THAT IS IN CONFLICT WITH LOCALLY ENFORCED CODES.
4. CONTRACTOR SHALL IMMEDIATELY NOTIFY THE ARCHITECT OF ANY REQUIRED MODIFICATIONS THAT ARE NOT SHOWN ON THE DRAWINGS.
5. ALL ELECTRICAL MATERIAL SHALL BE IN NEW & UNDAMAGED CONDITION WHEN INSTALLED. ALL EQUIPMENT SHALL BE LISTED BY A NATIONALLY RECOGNIZED TESTING LABORATORY.
6. ALL DIMENSIONS & MEASUREMENTS FOUND ON PLANS ARE APPROXIMATE. CONTRACTOR SHALL VALIDATE ALL DIMENSIONS PRIOR TO ORDERING MATERIAL TO INCLUDE MAKING FIELD MEASUREMENTS BASED ON ACTUAL SITE CONDITIONS TO DEVELOP COMPLETE ORDERS AND INSTALL SYSTEMS PER DRAWINGS AND SPECIFICATIONS.
7. REFER TO ARCHITECTURAL PLANS FOR EXACT LOCATION AND ELEVATION OF ALL LIGHTING FIXTURES AND ASSOCIATED DEVICES AND EQUIPMENT.
8. PRIOR TO AIMING/ADJUSTING ACTIVITIES, COMMISSIONING OR PUNCHWALK COMMENCEMENT, CONTRACTOR SHALL PROPERLY TEST AND VERIFY ALL CIRCUITRY AND CONTROL WIRING AND IMPLEMENT ALL CONTROLS PROGRAMMING.

B. INSTALLATION:

1. LOCATIONS OF THE FIXTURES SHALL BE PER THE ARCHITECTURAL REFLECTED CEILING PLAN(S) AND SHALL BE COORDINATED AT TIME OF ROUGH IN. CONFLICTS BETWEEN THE ARCHITECTURAL REFLECTED CEILING PLAN(S) AND THE ELECTRICAL/LIGHTING DESIGN PLAN(S) SHALL BE BROUGHT TO THE ATTENTION OF THE ARCHITECT IN WRITING PRIOR TO ORDERING FIXTURES.
2. LIGHTING DRAWINGS REPRESENT THE DESIGN INTENT OF THE EQUIPMENT, DEVICES, ETC. TO BE CONNECTED AND THE CIRCUITS TO WHICH THEY ARE TO BE CONNECTED. CONTRACTOR SHALL INSTALL ALL CONDUIT, J-BOXES AND ADDITIONAL HARDWARE AND DEVICES AS REQUIRED FOR A COMPLETE AND OPERATING SYSTEM.
3. ALL LIGHTING FIXTURES SHALL BE MOUNTED AND INDIVIDUALLY SUPPORTED IN ACCORDANCE WITH APPLICABLE CODES. FIXTURES SHALL BE FURNISHED AND INSTALLED WITH ALL REQUIRED MOUNTING DEVICES, HARDWARE AND ACCESSORIES.
4. CONTRACTOR TO VERIFY LIGHTING FIXTURE MOUNTING HARDWARE IS COMPATIBLE WITH APPROVED MOUNTING CONDITIONS. MOUNTING CONDITIONS MUST ALLOW FOR AIMING AND ADJUSTING OF LIGHTING FIXTURES ON SITE.
5. CONTRACTOR TO INCLUDE AIMING/ADJUSTING LABOR AFTER DARK AS REQUIRED FOR ANY ADJUSTABLE LIGHTING FIXTURE AND FOR EACH INDIVIDUAL LIGHTING FIXTURE HEAD OR LAMP HOLDER IN A MULTI-FIXTURE/MULTI-LAMP ASSEMBLY. LIGHTING FIXTURES TO BE AIMED/ADJUSTED PER THE DIRECTION OF OWNER, ARCHITECT AND/OR LIGHTING CONSULTANT.
6. CONTRACTOR TO SUPPLY ADEQUATE SUPPORT INCLUDING LADDERS, LIFTS OR OTHER EQUIPMENT REQUIRED TO ACCESS LIGHTING FIXTURES AT THE TIME OF FOCUS, INCLUDING EVENING OR NIGHT WORK AS MAY BE REQUIRED DUE TO SCHEDULE CONFLICT OR DAYLIGHT IMPACT. AIMING/ADJUSTING LABOR SHALL BE PREPARED FOR WORK WITH COMMON HAND TOOLS TO MAKE ADJUSTMENTS AND MINOR REPAIRS DURING AIMING.
7. ALL COVE MOUNTED LIGHTING FIXTURES SHALL EXTEND THE FULL LENGTH OF THE COVE. CONTRACTOR TO FIELD MEASURE COVE LENGTH AND ORDER QUANTITY OF LIGHTING FIXTURES AS REQUIRED. PROVIDE COMPLETE MANUFACTURER SHOP DRAWINGS OF BUILT-IN COVE OR LINEAR LIGHTING SYSTEMS.
8. CONTRACTOR TO REPLACE ALL INOPERATIVE LAMPS, LED ARRAYS OR SYSTEMS AT THE END OF THE CONSTRUCTION PHASE PRIOR TO THE FOCUS AND PROGRAMMING PHASE AND AGAIN PRIOR TO OWNER OCCUPANCY OR PROJECT OPENING.
9. ALL POLE MOUNTED FIXTURES, POST MOUNTED FIXTURES AND BOLLARDS SHALL BE PROVIDED WITH A STRUCTURAL FOOTING AS DETAILED ELSEWHERE IN THE DRAWINGS. FOOTING SIZE TO BE PROVIDED BY STRUCTURAL ENGINEER. REFERENCE FIXTURE SCHEDULE AND DETAILS FOR MORE INFORMATION.
10. ALL EXIT SIGNS SHALL BE INSTALLED IN STRICT ACCORDANCE WITH THE LOCAL FIRE PREVENTION CODE AUTHORITY. THE CONTRACTOR IS RESPONSIBLE FOR PROVIDING ALL NECESSARY HARDWARE SUCH THAT ALL EXIT SIGNS ARE INSTALLED IN AN APPROVED VISIBLE LOCATION. THE CONTRACTOR SHALL VERIFY CHEVRONS AND NUMBER OF FACES PER EXIT SIGN WITH ARCHITECTURAL REFLECTED CEILING PLAN(S). ANY DISCREPANCIES BETWEEN EXIT SIGNS DEPICTED ON ARCHITECTURAL AND ELECTRICAL PLANS SHALL BE BROUGHT TO THE ATTENTION OF THE ARCHITECT PRIOR TO ORDERING EXIT SIGNS.

C. SUBMITTALS AND SUBSTITUTIONS:

1. CONTRACTOR TO SUBMIT FOR APPROVAL ON THE PRODUCTS THEY INTEND TO FURNISH WITHIN TEN (10) DAYS OF AWARD OF CONTRACT. FAILURE TO SUBMIT WITHIN DEADLINE CONSTITUTES A GUARANTEE THAT ONLY THE BASE SPECIFIED PRODUCTS WILL BE SUPPLIED AND THAT NO OTHER PRODUCTS, WHETHER LISTED AS ALTERNATES OR NOT, WILL BE CONSIDERED.
2. CONTRACTOR TO PROVIDE A SUBMITTAL/SHOP DRAWING SUBMITTAL FOR EACH LIGHTING FIXTURE TYPE INCLUDING ACCESSORIES, BALLAST(S), POWER SUPPLIES, DRIVER(S) TRANSFORMER(S), AND INTEGRAL EMERGENCY BATTERIES AND TEST SWITCHES. ANY LIGHTING FIXTURE SUBMITTAL PROVIDED WITHOUT SPECIFIC LIGHTING FIXTURE'S ACCESSORIES, BALLAST, POWER SUPPLY, DRIVER, TRANSFORMER OR BATTERY INFORMATION SHALL BE REJECTED AS INCOMPLETE.
3. SUBSTITUTIONS OF THE SPECIFIED PRODUCTS ARE STRICTLY PROHIBITED - UNLESS APPROVED AS STATED HEREIN. LIGHTING FIXTURE SUBSTITUTIONS SHALL BE FORMALLY PRESENTED TO THE ELECTRICAL ENGINEER AND/OR LIGHTING CONSULTANT, BY APPOINTMENT ONLY, AT LEAST TEN (10) WORKING DAYS PRIOR TO BID TIME. THE SUBMITTAL MATERIAL SHALL INCLUDE THE FOLLOWING ITEMS.
   a. A COMPLETE AND OPERATING SAMPLE, WIRED FOR 120V OPERATION, WITH LAMP, CORD AND PLUG.
   b. A COMPLETE PHOTOMETRIC REPORT, FOR THE PROPOSED SUBSTITUTE PRODUCT, USING THE SPECIFIED LAMP OR LED TYPE AND WATTAGE, INCLUDING TABULATED CANDLEPOWER VALUES, COEFFICIENT OF UTILIZATION, AND AN ISO-FOOT-CANDLE DIAGRAM. PRORATED DATA WILL NOT BE ACCEPTABLE. THE PHOTOMETRIC REPORT MUST BE DONE IN ACCORDANCE WITH PUBLISHED I.E.S. TESTING PROCEDURES AND CERTIFIED BY A REGISTERED ELECTRICAL ENGINEER.
   c. A CURRENT ORIGINAL CATALOG DATA SHEET WITH LIGHTING FIXTURE CATALOG NUMBERS. MODIFIED DATA SHEETS WILL NOT BE ACCEPTABLE.
   d. A SIGNED COPY OF THE "SUBSTITUTION COMPLIANCE FORM", LOCATED IN THE DIVISION 1 SPECIFICATION, STATING THAT IF THE PROPOSED SUBSTITUTION IS ACCEPTED, THE PROJECT SCHEDULE WILL NOT BE NEGATIVELY AFFECTED. IF THE COMPLETION OF THE PROJECT IS DELAYED BECAUSE OF THE APPROVED SUBSTITUTION, THE CONTRACTOR WILL BE RESPONSIBLE FOR PAYMENT OF ANY ESTABLISHED LIQUIDATED DAMAGES.
   e. FOR SPECIFIC INTERIOR FIXTURE SUBSTITUTIONS, WHEN DIRECTED BY THE ELECTRICAL ENGINEER AND/OR LIGHTING CONSULTANT, A POINT-BY-POINT SCALED COMPUTER PRINTOUT SHALL BE PROVIDED VERIFYING THE ILLUMINATION LEVELS FOR THE SPECIFIC INTERIOR AREA. IF THE SUBSTITUTED FIXTURE IS AN EMERGENCY FIXTURE, THE REPORT SHALL BE RUN IN BOTH NORMAL AND EMERGENCY MODES. THIS REPORT SHALL BE CONFIGURED WITH SPECIFIC CONSTRAINTS, AS DIRECTED BY THE ENGINEER OF RECORD. THE REPORT MUST SHOW THAT THE SUBSTITUTED FIXTURE PROVIDES PERFORMANCE EQUAL TO OR BETTER THAN THE LIGHTING LEVELS OF THE SPECIFIED PRODUCT.
   f. FOR ALL EXTERIOR FIXTURE SUBSTITUTIONS, A POINT-BY-POINT SCALED COMPUTER PRINTOUT SHALL BE PROVIDED VERIFYING THE ILLUMINATION LEVELS FOR THE ENTIRE SITE PLAN BASED ON USING THE PROPOSED ALTERNATIVE FIXTURES. THE REPORT MUST SHOW THAT THE SUBSTITUTED FIXTURE PROVIDES PERFORMANCE EQUAL TO, OR BETTER THAN THE LIGHTING LEVELS AND UNIFORMITY RATIOS (MAX:MIN AND AVG:MIN) OF THE SPECIFIED PRODUCT. THIS REPORT SHALL BE CONFIGURED WITH THE FOLLOWING CONSTRAINTS.
      i. THE SPACING INCREMENT OR POINTS ON THE VERIFICATION REPORT SHALL NOT EXCEED TEN (10) FEET IN EITHER DIRECTION.
      ii. THE PHOTOMETRIC CALCULATION SHALL BE BASED ON PROVIDING MAINTAINED FOOT-CANDLE LEVELS USING MEAN LAMP LUMENS AND A LIGHT LOSS FACTOR, AS DIRECTED BY THE ENGINEER OF RECORD.
   iii. THE PHOTOMETRIC CALCULATION SHALL SHOW ANY ADDITIONAL ENERGY AND/OR ENERGY COSTS, FOR A TEN YEAR PERIOD, AS COMPARED TO THE ORIGINALLY SPECIFIED ITEM. THE TOTAL COSTS FOR THESE EXPENSES WILL BE DEDUCTED FROM THE CONTRACT COST.
4. DURING THE BIDDING PROCESS, THE CONTRACTOR SHALL REFER TO THE LIGHTING FIXTURE SCHEDULES ON THE ARCHITECTURAL PLANS (IF PROVIDED ON PROJECT), LIGHTING DESIGN PLANS/SPECIFICATIONS (IF PROVIDED ON PROJECT), AND THE ELECTRICAL PLANS. ANY DISCREPANCIES BETWEEN THEM INCLUDING, BUT NOT LIMITED TO, PART NUMBERS AND FIXTURE DESCRIPTIONS SHALL BE BROUGHT TO THE ATTENTION OF THE ARCHITECT, ELECTRICAL ENGINEER, AND LIGHTING DESIGNER WITH PRE-BID RFI(S). WHERE DISCREPANCIES ARE DISCOVERED WHEN THERE IS INSUFFICIENT TIME TO ISSUE PRE-BID RFI(S), THE BASE BID SHALL INCORPORATE THE MOST COSTLY VERSION OF THE DISCREPANCY AND SHALL BE MEMORIALIZED IN AN RFI OR AS A BID CLARIFICATION. PROVIDING A VOLUNTARY DEDUCTIVE ALTERNATE BID CLARIFYING FIXTURE SCHEDULE DISCREPANCIES IS ALSO AN ACCEPTABLE FORM OF DISCREPANCY DOCUMENTATION.
5. FIXTURE FINISHES:
   a. ALL FIXTURE FINISHES AND COLORS, UNLESS NOTED AS PREMIUM OR CUSTOM, SHALL BE SELECTED FROM THE MANUFACTURERS STANDARD COLOR OPTIONS AS LISTED ON THE FIXTURE SPECIFICATION SHEET. STANDARD FINISH SHALL BE SELECTED BY THE ARCHITECT, INTERIOR DESIGNER OR OWNER. THIS DIRECTION WILL BE PROVIDED IN THE SHOP DRAWING REVIEW PROCESS.
   b. ALL FIXTURES INDICATED WITH A PREMIUM OR CUSTOM COLOR SHALL BE ASSIGNED A CUSTOM COLOR REFERENCE NUMBER (SUCH AS RAL#) OR PROVIDE FIVE (5) PAINT CHIPS FOR MANUFACTURER TO USE TO MATCH COLOR. PREMIUM OR CUSTOM FINISH SHALL BE SELECTED BY THE ARCHITECT, INTERIOR DESIGNER OR OWNER. THIS DIRECTION WILL BE PROVIDED IN THE SHOP DRAWING REVIEW PROCESS.
6. THE LIGHTING FIXTURE MODEL NUMBER MAY INDICATE A FIXTURE OPTION THAT THE CONTRACTOR MUST IDENTIFY PRIOR TO ORDERING/PROVIDING SUBMITTALS, INCLUDING, BUT NOT LIMITED TO: VOLTAGE, MOUNTING CONDITION/HARDWARE, FINISH, DIMMING REQUIREMENTS/BALLAST INFORMATION. GENERALLY, CONTRACTOR-SELECTED OPTIONS ARE DENOTED IN THE PART NUMBER WITH BRACKETS EX: [VOLTS?]
   a. CONTRACTOR SHALL BE RESPONSIBLE FOR VERIFYING AND PROVIDING ALL HANGERS, CLIPS AND NECESSARY HARDWARE TO INSTALL THE FIXTURE IN THE ENVIRONMENT AS SHOWN ON THE ARCHITECTURAL PLANS. ALL FIXTURES SHALL BE PROVIDED WITH ALL REQUIRED STRUCTURAL SUPPORTS AS REQUIRED BY THE CURRENTLY ADOPTED CODES.
   b. VOLTAGES SHALL BE VERIFIED BY THE CONTRACTOR PRIOR TO ORDERING - SEE ELECTRICAL DRAWINGS FOR BRANCH CIRCUIT INFORMATION. IT IS POSSIBLE THAT FIXTURES WILL BE REQUIRED IN VARIOUS VOLTAGES.
7. "NO KNOWN EQUAL" LIGHTING FIXTURE PRICING/BIDDING NOTES:
   a. EACH FIXTURE IDENTIFIED AS "NO KNOWN EQUAL" ON THIS PROJECT SHALL BE BID IN A "LINE ITEM" FORMAT. A PER UNIT MATERIAL COST SHALL BE PROVIDED FOR EACH "NO KNOWN EQUAL" FIXTURE. THIS PRICE SHALL INCLUDE LAMPS AS WELL AS ALL OTHER REQUIRED MATERIALS REQUIRED FOR INSTALLATION. THE FIXTURE PRICE QUOTED WILL BE UTILIZED, PRIOR TO SHOP DRAWING APPROVAL, FOR "ADDING" AND/OR "DELETING" ANY QUANTITY OF THE FIXTURE.
   b. A UNIT COST SHALL BE SUBMITTED FOR EACH "NO KNOWN EQUAL" FIXTURE. SUBMIT THE PRICING AS PART OF THE BID FORM ON A SEPARATE 8 1/2" X 11" SHEET.
   c. FAILURE TO SUBMIT A LINE ITEM FOR EACH "NO KNOWN EQUAL" FIXTURE MAY RESULT IN THE REJECTION, REFUSAL, OR NON-ACCEPTANCE OF THE CONTRACTOR'S BID.
8. FIXTURES IDENTIFIED AS "NO KNOWN EQUAL - OWNER STANDARD" OR "CAMPUS STANDARD" ARE TO BE PROVIDED AS SPECIFIED, WITH SUBSTITUTIONS STRICTLY PROHIBITED. SEE ADDITIONAL NOTES FOR "NO KNOW EQUAL" BIDDING REQUIREMENTS.

D. LIGHTING FIXTURE SPECIFICATIONS:

1. ALL EXTERIOR LIGHTING EQUIPMENT SHALL BE RATED FOR WET LOCATION AND THE IP RATING OF ALL EQUIPMENT, INCLUDING BALLAST, POWER SUPPLY AND TRANSFORMER ENCLOSURES SHALL CONFORM TO THE CONDITIONS IN WHICH THE LIGHTING FIXTURE IS MOUNTED.
2. ALL BALLASTS, POWER SUPPLIES, DRIVERS AND/OR TRANSFORMERS THAT ARE REMOTELY LOCATED SHALL BE INSTALLED AS NEAR TO THE LIGHTING FIXTURE(S) AS POSSIBLE, HIDDEN FROM PUBLIC VIEW IN AN ACCESSIBLE COMPARTMENT THAT IS WELL VENTILATED. CONTRACTOR TO COORDINATE LOCATION(S) WITH ARCHITECT PRIOR TO ROUGH-IN.
3. ALL TRANSFORMERS SHALL BE FUSED ON THE SECONDARY SIDE.
4. COLOR FILTERS SHALL BE GLASS OR DICHROIC UNLESS OTHERWISE INDICATED ON DRAWINGS.
5. CONTRACTOR TO PROVIDE 20% ADDITIONAL COLOR FILTERS FOR EACH COLOR AND SIZE.
6. CONTRACTOR TO VERIFY THAT ALL LIGHTING FIXTURES SPECIFIED WITH A COLOR FILTER ARE SUPPLIED WITH ANY AND ALL ATTACHMENT DEVICES FOR THE FILTER.
7. ALL TRACK LIGHTING FIXTURES SHALL BE PROVIDED WITH THE APPROPRIATE TRACK SYSTEM WHICH SHALL INCLUDE ALL MISCELLANEOUS COMPONENTS REQUIRED, AS WELL A ANY REQUIRED CIRCUIT LIMITERS FOR A COMPLETE INSTALLATION. TRACK LENGTH(S) SHALL BE PER DRAWINGS.

E. DRIVERS / TRANSFORMERS:

1. [OPTION?] IN FIXTURE MODEL NUMBER INDICATE THAT THE FIXTURE DRIVER TYPE AND QUANTITY MUST BE VERIFIED BY THE CONTRACTOR USING FIXTURE CALLOUT INFORMATION AND FIXTURE SWITCHING CONFIGURATION INFORMATION.
2. CONTINUOUS DIMMING AND CONTROLLABLE LED:
   a. PROVIDE CONTROLLABLE LED DIMMING DRIVERS (INTEGRAL OR REMOTE) WITH POWER FACTOR GREATER THAN 0.85 AND MAXIMUM THD OF 20% AT FULL LOAD.
   b. PRIOR TO BID CONTRACTOR TO VERIFY DRIVER COMPATIBILITY WITH DIMMERS, DIMMING CONTROL SYSTEM(S) AND DISTRIBUTED LIGHTING CONTROL SYSTEM(S) WITH RESPECTIVE LIGHTING MANUFACTURER(S) AND LIGHTING/DIMMING CONTROL SYSTEM MANUFACTURERS. IF COMPATIBILITY DOCUMENTATION IS UNAVAILABLE FOR A GIVEN LED FIXTURE/LIGHTING CONTROL SYSTEM COMBINATION, CONTRACTOR SHALL INCLUDE COSTS IN THE BASE BID FOR RESPECTIVE LIGHTING MANUFACTURER AND LIGHTING CONTROLS MANUFACTURER TO TEST/WARRANT COMPATIBILITY OF SAID COMBINATIONS.
   c. CONTINUOUS LED DIMMING DRIVERS SHALL BE AT MINIMUM 4-WIRE 0-10V 10% DIMMING (HOT, NEUTRAL, DIM+, DIM-).

F. EMERGENCY FIXTURES / BATTERY PACKS:

1. LIGHT FIXTURES INDICATED AS EMERGENCY SHALL BE IDENTIFIED / PROVIDED AS FOLLOWS:
   a. INTEGRAL BATTERY PACK (EB):
      3a/3EB - FIXTURE CONNECTED TO CIRCUIT "3", CONTROL SWITCHLEG "a" - WITH THE BATTERY CHARGING LEAD CONNECTED TO A CONSTANT HOT CIRCUIT "3".
      3NL/3EB - FIXTURE CONNECTED TO A CONSTANT HOT CIRCUIT "#3". BATTERY CHARGING LEAD CONNECTED TO A CONSTANT HOT CIRCUIT "3".
   b. REMOTE BACK-UP SOURCE (EM):
      3a/3EM - ROUTED THROUGH A U.L. LISTED TRANSFER RELAY (LC & D #GR-2001E/S) FOR SWITCHED CONTROLS OR A U.L. LISTED TRANSFER SWITCH (BODINE #GTD SERIES DEVICE) FOR DIMMING CONTROLS. CONNECTED TO A CONSTANT HOT EMERGENCY CIRCUIT "3". SEE DISTRIBUTED LIGHTING CONTROL SPECIFICATIONS FOR DEVICE REQUIREMENTS WHEN CONTROLLED BY OCCUPANCY SENSORS.
      3NL/3EM - FIXTURE CONNECTED TO A CONSTANT HOT EMERGENCY CIRCUIT "3".
   c. REMOTE BACK-UP SOURCE (EM) NOTES:
      - ALL REMOTE BACK UP SOURCE (EM) FIXTURES SHALL BE PROVIDED WITH AN IN LINE FUSE. PROVIDE ADDITIONAL LABELING TO INDICATE FIXTURE IS PROTECTED BY A FUSE.
2. EMERGENCY BATTERY PACK NOTES:
   a. PROVIDE INTEGRAL TEST SWITCH / CHARGE LIGHT OPTION FOR ALL EMERGENCY BATTERY PACKS INSTALLED IN LIGHT FIXTURES.
   b. ALL RECESSED DOWNLIGHTS SUPPLIED WITH A BATTERY PACK SHALL BE PROVIDED WITH AN INTEGRAL COMBINATION TEST SWITCH / CHARGING INDICATOR LIGHT- MOUNTED INSIDE THE REFLECTOR. REMOTE TEST SWITCH / CHARGING LIGHTS ARE NOT ALLOWED. THE TEST SWITCH / CHARGING INDICATOR LIGHT SHALL BE SECURELY ATTACHED TO THE REFLECTOR WITH 18" OF SLACK LEADS, FOR EASY REMOVAL OF THE REFLECTOR ASSEMBLY.
   c. ALL BATTERY PACKS AND ALL COMBINATION LED BATTERY PACK/EMERGENCY DRIVERS SHALL BE UL924 LISTED.
   d. PRIOR TO BID, CONTRACTOR SHALL VERIFY WITH FIXTURE MANUFACTURER(S) THAT EMERGENCY BATTERY PACKS ARE MANUFACTURED TO BE INTEGRAL TO FIXTURE HOUSINGS.
   e. SHOULD THE SPECIFIED LED EMERGENCY BATTERY PACK(S) NOT FIT WITHIN A GIVEN FIXTURE(S) OR SHOULD THE FIXTURE NOT BE MANUFACTURED TO ACCOMMODATE A BATTERY PACK, CONTRACTOR SHALL INCLUDE ALL COSTS IN BASE BID TO LOCATE/CONNECT SELF-TESTING MINI INVERTER(S) (IOTA #ILS SERIES OF BODINE#ELI-S-[WATT?]) REMOTELY FROM THE FIXTURE(S) IN THE NEAREST ELECTRICAL ROOM OR TO LOCATE EMERGENCY BATTERY PACK(S) REMOTELY FROM THE FIXTURE ABOVE THE NEAREST ACCESSIBLE CEILING.
   f. LED BATTERY PACKS SHALL PROVIDE A MINIMUM OF 90 MINUTES OF EMERGENCY ILLUMINATION, AND SHALL BE RATED AT A MINIMUM OF 10 WATTS, OR AS SPECIFIED. WHERE A FIXTURE TYPE IS UNAVAILABLE WITH A 10W BATTERY PACK OR WHERE THE WATTAGE IS NOT SPECIFIED ON THE PLANS, INCLUDE ALL COST IN BASE BID TO PROVIDE THE HIGHEST WATTAGE AVAILABLE ON THE FIXTURE CUTSHEET. ANY LISTED EQUAL FIXTURE OR ANY SUBSTITUTION OFFERED BY THE CONTRACTOR MUST ALSO HAVE BATTERY PACKS CAPABLE OF PRODUCING THE SAME OR MORE LUMENS WHEN ON BATTERY AS OUTLINED ABOVE. ACCEPTABLE MANUFACTURES: BODINE OR IOTA.
   g. TO MAINTAIN UL LISTING OF LED FIXTURE, FIXTURE MANUFACTURER(S) SHALL INSTALL LED EMERGENCY BATTERY PACKS AT THE FACTORY AND OBTAIN A UL LISTING FOR THE FIXTURE WITH EMERGENCY BATTERY PACK. FIELD-INSTALLATION OF LED EMERGENCY BATTERY PACK(S) IS PROHIBITED.
   h. PROVIDE DAMP LOCATION VERSION IN ALL DAMP LABEL INSTALLATIONS.

LIGHTING FIXTURE SCHEDULE

SYMBOL	TYPE	MANUFACTURER AND MODEL NUMBER	FIXTURE VA/ WATTS	LAMP/ LAMP OPTION	GENERAL DESCRIPTION
	1	METALUX 24RLN-42-UNV-L835-CD-1 - EQUAL BY: DAY-BRITE	31.2	LED/3500K	2'x4' RECESSED LED TROFFER WITH 4200 LUMEN LED MODULE, 0-10V DIMMING DRIVER, PERFORATED CENTER BASKET DIFFUSER. SHADED SYMBOL INDICATES EMERGENCY FIXTURE EQUIPPED WITH A 90 MINUTE EMERGENCY BATTERY PACK. -
	2	METALUX 24GR-LD4-48-F1-UNV-L835-CD1-PAF EQUAL BY: PHILIPS DAY BRITE, HE WILLIAMS	44/44	LED/3500K	RECESSED TROFFER FOR USE WITH 44W, 4800 LUMEN LED MODULE. 2 FOOT BY 4 FOOT. 3 1/4-INCH DEEP. #12 PATTERN ACRYLIC PRISMATIC LENS. PAINTED AFTER FABRICATION. 0-10V DIMMING. HIGH REFLECTANCE WHITE ENAMEL FINISH. FLAT WHITE STEEL DOOR. PROVIDE EMERGENCY BATTERY PACK WHERE SHOWN ON PLANS. -
	3	METALUX 4SNLED-LD5-22SL-LN-UNV-L835-CD1 - EQUAL BY: DAY-BRITE	16/16	LED/3500K	ROUND SEMI-FROST LENSED STRIPLIGHT FOR USE WITH 16W, 2276 LUMEN MODULE 4 FOOT BY 3-INCH BY 3 11/16-INCH. FROSTED ACRYLIC LENS VERIFY HEIGHT WITH ARCHITECT PRIOR TO ROUGH-IN. PAINTED AFTER FABRICATION. 0-10V DIMMING. HIGH REFLECTANCE BAKED WHITE ENAMEL FINISH.
	4	METALUX 8TSNLED-LD5-60SL-LN-UNV-L835-CD1-AYC EQUAL BY: DAY-BRITE	50/50	LED/3500K	ROUND SEMI-FROST LENSED STRIPLIGHT FOR USE WITH 50W, 6103 LUMEN MODULE 8 FOOT BY 3-INCH BY 3 11/16-INCH. FROSTED ACRYLIC LENS WITH CHAIN HANGER VERIFY HEIGHT WITH ARCHITECT PRIOR TO ROUGH-IN. PAINTED AFTER FABRICATION. 0-10V DIMMING. HIGH REFLECTANCE BAKED WHITE ENAMEL FINISH.
	5	HALO HC6-15-D010-HM6-0525-835-61-WD-C - EQUAL BY: LIGHTOLIER	14.5	LED/3500K	RECESSED LED DOWNLIGHT 6" APERTURE WITH CLEAR SPECULAR REFLECTOR, 0-10V DRIVER. 1500 LUMEN OUTPUT. - - -
	6	HALO HC6-45-D010-HM6-4560-835-61-MD-C - EQUAL BY: LIGHTOLIER	46	LED/3500K	RECESSED LED DOWNLIGHT 6" APERTURE WITH CLEAR SPECULAR REFLECTOR, 0-10V DRIVER. 4500 LUMEN OUTPUT. - - -
	7	NEO RAY S122DRP-S-675D-8-35-GYP-_F_-1-U-DD-F-[COLOR] - EQUAL BY: DAY-BRITE	6.8/FT	LED/3500K	2" LINEAR RECESSED PERIMETER LED. 625 LUMEN/FOOT. FLUSH SATIN DIFFUSER 0-10V DIMMING DRIVER. CONFIRM COLOR WITH ARCHITECT PRIOR TO ORDERING. PROVIDE LENGTH AS SHOWN ON PLANS FOR WALL TO WALL COVERAGE. - -
	8	OCL MN1-P1ED-36-GW-BNP-LED2-35K-UNV-??-DM1 - EQUAL BY: -	105	LED/3500K	DECORATIVE LED PENDANT WITH 36 ROUND ACRYLIC DIFFUSER AND ALUMINUM RING SOLID ALUMINUM CONSTRUCTION, 0-10V DIMMING DRIVER. GLOSS WHITE DIFFUER. VERIFY FINISH COLOR AND MOUNTING HEIGHT WITH ARCHITECT PRIOR TO ORDER. - -
	9	EXISTING DECORATIVE FIXTURE - - EQUAL BY: NONE	50	LED/3000K	EXISTING CHAIN HUNG DECORATIVE FIXTURE (AUDITORIUM) RE-LAMP FIXTURE WITH SORA A19 E26 11W LED LAMP WITH 3000K COLOR TEMPERATURE. VERIFY QUANTITY OF LAMPS PRIOR TO BID. - -
	10	METALUX 4WNLED-LD4-40SL-F-UNV-L835-CD1 - EQUAL BY: DAY-BRITE	30	LED/3500K	1'X4' SURFACE MOUNTED LED WITH FROSTED ACRYLIC WRAP LENS, STEEL HOUSING, AND 0-10V DIMMING DRIVER. 4000 LUMEN OUTPUT. SHADED SYMBOL INDICATES EMERGENCY FIXTURE EQUIPPED WITH A 90 MINUTE EMERGENCY BATTERY PACK. -
	11	EXISTING DECORATIVE SCONCE - - EQUAL BY: -	14	LED/3000K	EXISTING WALL SCONCE RE-LAMP FIXTURE WITH SORA A19 E26 11W LED LAMP WITH 3000K COLOR TEMPERATURE. VERIFY QUANTITY OF LAMPS PRIOR TO BID. - -
, OR	X	SURE-LITES LPX-7-[FACES?]-[FINISH?]-[OPTION?]-[SD OPTION?]-[PROTECTION?] EQUAL BY: ???	2/2	LED/GREEN	THERMOPLASTIC EXIT SIGN FOR USE WITH LED LAMPS. EMERGENCY BATTERY PACK. REFER TO ARCHITECTURAL PLANS FOR NUMBER OF FACES AND CHEVRONS. GREEN LETTERS AND WHITE HOUSING,
	S1	MCGRAW-EDISON GLEON-AE-02-LED-E1-T4W-BZ-MS/2-L20 - EQUAL BY: GARDCO	105	LED/4000K	SINGLE LED LUMINAIRE, POLE MOUNTED AT 18'-0" AFF, WITH EXTRUDED ALUMINUM HOUSING AND BI-LEVEL MOTION SENSOR. PROVIDE 15' SQUARE STEEL POLE. BRONZE FINISH. - -
	S2	MCGRAW-EDISON GLEON-AE-02-LED-E1-T4W-BZ-MS/2-L20 - EQUAL BY: GARDCO	210	LED/4000K	DOUBLE LED LUMINAIRE, POLE MOUNTED AT 18'-0" AFF, WITH EXTRUDED ALUMINUM HOUSING AND BI-LEVEL MOTION SENSOR. PROVIDE 15' SQUARE STEEL POLE. BRONZE FINISH. - -
	S3	HALO FT-28-VC-W - EQUAL BY: -	23.6	LED/4000K	TWIN LED WALL MOUNTED FLOODLIGHT. 2200 LUMEN OUTPUT WET LOCATION LISTED. - - -

SEE GENERAL LIGHTING FIXTURE SCHEDULE NOTES FOR CRITICAL FIXTURE SPECIFICATION AND ORDERING INFORMATION.

Copyright © 2025
All ideas, designs, arrangements and plans indicated or represented by this drawing are owned by, and the property of, NICHOLS, MELBURG and ROSSETTO and were created, evolved and developed for use on, and in conjunction with, the specified project. None of such ideas, designs, arrangements or plans shall be used by, or disclosed to any person, firm or corporation for any purpose whatsoever without the written permission of NICHOLS, MELBURG and ROSSETTO.

NICHOLS MELBURG & ROSSETTO
ARCHITECTS + ENGINEERS
300 KNOLLCREST DRIVE
REDDING, CA. 96002
(530) 222-3300 (530) 222-3538 FAX
http://www.nmrdesign.com

CONSULTANTS

tk1sc
Member of WSP
11870 Pierce Street, Suite 160
Riverside, California 92505
951.299.4160 www.tk1sc.com
Project Leader - Jerry Leonhardt
Electrical Lead - Jerry Leonhardt
WSP Job #: B2305166.000

LICENSE STAMPS

REGISTERED PROFESSIONAL ENGINEER
RAYMOND W. SWARTZ
No. E15610
Ex. 12/31/2025
ELECTRICAL
STATE OF CALIFORNIA

PROJECT NAME

TEHAMA COUNTY
CORNING
VETERAN'S HALL

1620 SOLANO ST.
CORNING, CA

SHEET TITLE

LIGHTING
FIXTURE
SCHEDULE

DRAWING STATUS

CONSTRUCTION
DOCUMENTS

REVISIONS

Sym.	Description	Date

Drawn By	
Date Issued	2/13/2025
Scale	-
Project No.	21-6497

SHEET No.

E4.1

Login Name: USGL700366
Plot Date: February 13, 2025 - 9:33 am
File Name: P:\2023\B2305166.000 Corning Veterans Hall Remod\Drawings and Models\CAD\Electrical\E4-1.dwg
XREFS: x-CVH_Title Block

DLCS SCHEDULE

SYSTEM TOPOLOGY	COMMUNICATION TOPOLOGY	FIXTURE INTEGRATED SENSING	BAS INTEGRATION	WIRELESS DLCS COMPONENT BATTERY USAGE	REMARKS
NETWORKED	WIRED	NO	NO	NONE	

DISTRIBUTED LIGHTING CONTROL SYSTEM REQUIREMENTS:

1. THE CONTRACTOR SHALL BE RESPONSIBLE FOR THE FURNISHING OF ALL MATERIAL, LABOR, EQUIPMENT, AND SERVICES, IN CONNECTION WITH THE INSTALLATION OF A COMPLETE AND FULLY FUNCTIONING AND CODE COMPLIANT INSTALLATION.
2. IT IS THE INTENT OF THE CONTRACT DOCUMENTS, WHICH ARE PRESENTED IN A DIAGRAMMATIC FORMAT, TO PROVIDE CONTRACTOR INFORMATION THAT SUPPLEMENTS AND ENHANCES THE GENERALLY ACCEPTED CONSTRUCTION MEANS, METHODS, TECHNIQUES, SEQUENCES AND PROCEDURES EMPLOYED IN CONNECTION WITH INSTALLATION OF THIS TYPE OF PRODUCT/SYSTEM.
3. THE CONTRACTOR SHALL ALSO INCORPORATE THE REQUIREMENTS OF THE MANUFACTURER'S INSTALLATION INSTRUCTIONS/WARRANTY REQUIREMENTS AS PART OF THE REQUIREMENTS OF THE CONSTRUCTION DOCUMENTS. IN THE EVENT OF A CONFLICT BETWEEN THE CONTRACT DOCUMENT REQUIREMENTS AND THE MANUFACTURER'S INSTALLATION REQUIREMENTS, THE MORE STRINGENT REQUIREMENTS SHALL APPLY - UNLESS THE MORE STRINGENT REQUIREMENT VOIDS APPLICABLE WARRANTIES OR VIOLATES THE REQUIREMENTS OF THE LOCAL AUTHORITY HAVING JURISDICTION. ANY SUCH CONFLICT SHALL IMMEDIATELY BE BROUGHT TO THE ATTENTION OF THE ENGINEER IN WRITING THROUGH THE FORMAL RFI PROCESS.
4. REFER TO THE ASSOCIATED SCHEDULES, SCHEMATICS, DRAWINGS, AND SPECIFICATIONS FOR DETAILED INFORMATION/REQUIREMENTS ON THIS PRODUCT/SYSTEM.
5. CONTRACTOR IS RESPONSIBLE TO VERIFY LIGHT FIXTURE DIMMING PROTOCOLS ARE COMPATIBLE WITH THE DLCS.
6. SECURITY STANDARD CERTIFICATIONS, SHOP DRAWINGS AND COMPONENT SUBMITTALS SHALL BE SUBMITTED PER THE GENERAL SPECIFICATION REQUIREMENTS SHOWING ALL COMPONENTS, WIRING CONFIGURATIONS AND PROGRAMMING SCHEDULES. SCALED SHOP DRAWINGS DEPICTING/IDENTIFYING ALL SYSTEM COMPONENT LOCATIONS SHALL BE PROVIDED. SUBMITTALS SHALL BE MADE SPECIFIC TO THE PROJECT - GENERIC SUBMITTALS AND SUBMITTALS WITHOUT SCALED SHOP DRAWINGS SHALL BE REJECTED.

nLIGHT:

WALL BOX SENSORS:
STANDALONE SINGLE RELAY = #WSXA-PDT
STANDALONE DUAL RELAY = #WSXA-PDT-2P
SYSTEM-BASED DIMMING CONTROL = #nWSXA-PDT-LV-DX

CEILING SENSORS:
ONE-WAY DIRECTIONAL = (WIRED) #NRM-PDT-9 W/MASKING AS REQUIRED
(WIRELESS/LOW VOLTAGE) #RCMS-PDT-9-G2
W/ MASKING AS REQUIRED
(WIRELESS/BATTERY) #RCMSB-7/45/45A-G2
360 DEGREE COVERAGE = #NRM-PDT-9 STANDARD RANGE
#(WIRED) NRM-PDT-10 EXTENDED RANGE/CORRIDOR
#RCMS-PDT-9-G2
(WIRELESS/LOW VOLTAGE) #RCMS-PDT-10
EXTENDED RANGE/ CORRIDOR
EMBEDDED FIXTURE SENSOR = (WIRELESS/LOW VOLTAGE) #RES7-PDT-G2 INDOOR
(WIRELESS/LOW VOLTAGE) #RMSOD, RSDGR-127-G2
(WIRELESS/LOW VOLTAGE) RSBOR EXTERIOR
(WIRELESS/BATTERY) #RCMSB-7/45/45A-G2

DAYLIGHT SENSORS:
CLOSED LOOP SENSOR = (WIRED) #NES-ADCX OR #NRM-ADCX
(ONLY IF REQUIRED BY CLG. TYPE)
ONE-WAY DIRECTIONAL = (WIRELESS) #RCMS-G2
EMBEDDED FIXTURE SENSOR = (WIRELESS) #RES7

CONTROL UNITS:
SWITCH / STEPPED DIMMING = (WIRED) #NPP-16/#NSP-16
(WIRELESS) #RPP20-G2
NUMBER OF RELAYS AS REQUIRED.
CONTINUOUS DIMMING (O-10V) = (WIRED) #NPP16-D
(WIRELESS) #RPP20-D-G2
NUMBER OF RELAYS AS REQUIRED.
CONTINUOUS DIMMING (UNIVERSAL) = (WIRED) #NSP5-PCD. NUMBER OF RELAYS AS REQUIRED.
(WIRELESS) UTILIZE 0-10V PHASE DIMMING ADAPTER.
AUXILIARY INPUT/ OUTPUT CONTROL = #NAR-40
RECEPTACLE CONTROL = (WIRED) #NPP20 PL
(WIRELESS) #RPP20-G2
AV SYSTEM SERIAL INTERFACE = #nIO X (SCREENS / AV SYSTEM INTEGRATION)
HVAC CONTROL = #NAR-40
MOVEABLE PARTITION INTERFACE & SENSOR = #FRESCO TOUCH PANEL #NFCS-7TSN (PER SPACE),
#NIO-1S POWER PACK (SENSOR POWER), &
#ENTERTAINMENT NETWORKS PARTITION SENSOR
W/BOTTOM COVER (www.entertainmentworks.com).
DUAL MODE CORRIDOR/STAIRWAY/AISLEWAY CONTROL INPUT = #NDTC

WALL CONTROLS:
DIMMING = (WIRED) #NPODMA-DX SERIES
(WIRELESS) #RPODB-DX
(# OF DIMMERS AS REQUIRED - 4 / YOKE MAX)
KEYED SWITCH = #NIO INPUT INTERFACE
W/LEVITON #1221-2L-? KEYED SWITCH
TOUCH SCREEN = 7-INCH CAPACITIVE TOUCH #FCS-7TSN-[DMX?]-[FINISH?]
W/ ACUITY FCS-PS10 24V POWER SUPPLY
3.5-INCH CAPACITIVE TOUCH #NPOD TOUCH
INCLUDES ACUITY PS150 24V POWER SUPPLY

NETWORK COMM COMPONENTS:
GATEWAY = #NECY-MVOLT BAC ADR ENC GFXK WITH ENCLOSURE
BRIDGE = #NBRG-8-KIT

NETWORK RELAY PANELS: ARP INTENCXX NLT XXFCR MVOLT, QTY AS REQUIRED,
TO INCLUDE SPARE RELAYS SHOWN IN SCHEDULES.

EMERGENCY POWER INTERFACE:
SWITCHING / STEP DIMMING = (WIRED) NPP16-ER
(WIRELESS) #RPP20-ER-G2
NUMBER OF RELAYS AS REQUIRED, NORMAL CIRCUIT REQUIRED.
SWITCH / STEPPED DIMMING = (WIRELESS) #RPP20-EM-G2.
NUMBER OF RELAYS AS REQUIRED, NORMAL CIRCUIT NOT REQUIRED,
GENERATOR AND DELAYED TRANSFER INVERTER ONLY.
CONTINUOUS DIMMING = (WIRED) #NPP16-D-ER
CONTINUOUS DIMMING (0-10V) = (WIRELESS) #RPP20-D-ER-G2. NUMBER OF RELAYS AS REQUIRED,
NORMAL CIRCUIT REQUIRED.
(WIRELESS) #RPP20-D-EM-G2. NUMBER OF RELAYS AS REQUIRED,
NORMAL CIRCUIT REQUIRED EXCEPT WHERE GENERATOR AND
DELAYED TRANSFER INVERTER POWER IS USED.

LOAD INTERFACE DEVICE:
LUTRON COMPONENTS = LUTRON #BCI-0-10.
REVERSE PHASE DIMMING COMPONENTS = (WIRED) #NSP5-PCD-ELV120 OR LUTRON #PHPM-PA-DV-WH
(WIRELESS) #PCDM & RPP20DG2/
FORWARD PHASE DIMMING COMPONENTS = (WIRED) #NSP5-PCD-MLV OR LUTRON #PHPM-PA-DV-WH
(WIRELESS) LUTRON #BCI-0-10/LUTRON #PHPM-PA-DV-WH
2 & 3 WIRE DIMMING COMPONENTS = (WIRED) #NSP5-PCD-2W/3W OR LUTRON #PHPM-PA-DV-WH

Current / NX Controls

WALL BOX SENSORS:
STANDALONE SINGLE RELAY PIR OR US/PIR = #LHRIRS1-N-[FINISH] or LHRMTS1-N-[FINISH]
STANDALONE 0-10V DIMMING W/ SINGLE RELAY PIR or US/PIR = #LHRDMIRS3-N-[FINISH] or LHRDMMTS3-N-[FINISH]
STANDALONE DUAL RELAY, DUAL CIRCUIT PIR or US/PIR = #LHRDCIRD2-N-[FINISH] or LHRDCMTD2-N-[FINISH]
SYSTEM-BASED DIMMING CONTROL PIR or US/PIR = #NXSMIR-LH1-[FINISH] or NXSMDT-LH1-[FINISH]

CEILING MOTION/DAYLIGHT SENSORS (AVAILABLE STD. FINISHES = WHITE (WH), GREY (GY), BLACK (BK)):
STANDALONE 180 DEGREE (REQUIRES POWERPACK) US/PIR = OMNIDT500
STANDALONE 360 DEGREE (REQUIRES POWERPACK) US/PIR = OMNIDT2000
POWER PACK = UVPP
SYSTEM-BASED OPEN OFFICE PIR (200-450 SQFT) = NXSMP2-LMI
SYSTEM-BASED GEN PURPOSE PIR or US/PIR (2000 SQFT) = NXSMP2-OMNI-[FINISH] or NXSMDT-OMNI-[FINISH]
SYSTEM-BASED LOW BAY PIR (8 - 16 FT MOUNT) = NXSMP2-LMO-[FINISH]
SYSTEM-BASED HIGH BAY PIR (16 - 45 FT MOUNT) = NXSMP2-HMO-[FINISH]

DAYLIGHT SENSORS:
SYSTEM-BASED INDOOR DAYLIGHT SENSOR = NXDS
SYSTEM-BASED OUTDOOR DAYLIGHT SENSOR = NXDS-O

CONTROL UNITS:
ROOM CONTROLLER W/ 1 RELAY, 1 CH 0-10V DIMMING = NXRCFX2-1RD-UNV
ROOM CONTROLLER W/ 2 RELAYS, 2 CH 0-10V DIMMING = NXRCFX2-2RD-UNV
UL924 ROOM CONTROLLER W/ 1 RELAY, 2 CH 0-10V DIMMING = NXRC-UL924-UNV
PHASE DIM INTERFACE = NXFRD

WALL CONTROLS (# = BUTTONS = 1, 2, 3, 4, 5, 6, 8. (AVAILABLE STD. FINISHES = WH, LA, GY, BK, RD, IV):
NETWORK SMART SWITCH = NXSW2-#-[FINISH]
NETWORK WIRELESS SWITCH = NXSW-WRS-WH
NETWORK KEYED SWITCH = NXSW2-KEY-[FINISH]
NETWORK TIMED SWITCH = NXSW2-TO-[FINISH]
NETWORK ON/RAISE/LOWER/OFF = NXSW2-ORLO-[FINISH]
NETWORK SCENE SELECT SWITCH = NXSW2-SS-[FINISH]
NETWORK TOUCHSCREEN (1 GANG) = NXSW-TH3-WH

NETWORK COMM COMPONENTS:
NETWORK BRIDGE = NXHNB2
AREA MANAGER (UP TO 1000 DIGITAL DEVICES) = NXAC2-120
SITE MANAGER (UP TO 100 AREAS) = NXSITMGR-OADR2

NETWORK RELAY PANELS:
NETWORK RELAY PANEL: NXP2 SERIES (8, 16, 24, 32, 48 CAPACITY. DIMMING CHANNELS INCL. TO MATCH RELAY CAPACITY. AVAILABLE UL924 OPTION

EMERGENCY POWER INTERFACE:
UL924 ROOM CONTROLLER W/ 1 RELAY, 2 CH 0-10V DIMMING = NXRC-UL924-UNV
AUTOMATIC LOAD CONTROL RELAY W/ DIMMING = ALCR1277
UL1008 BRANCH CIRCUIT TRANSFER = UL1008CELTS1277
LOW VOLTAGE REMOTE TEST SWITCH = LVS-ETRB

NX CONNECT-WIRELESS ROOM CONTROL SOLUTION (# = BUTTONS = 2, 4)
WIRELESS ROOM CONTROLLER, 1 RELAY, 1 0-10 DIMMER = NXC-WA210-PM
WIRELESS ROOM CONTROLLER, 2 RELAY, 2 0-10 DIMMER = NXC-WA220-PM
WIRELESS ROOM CONTROLLER, 3 RELAY, 3 0-10 DIMMER = NXC-WA230-PM
WIRELESS BATTERY OCCUPANCY SENSOR W/ PHOTO SENSOR = NXC-WOS3-PC
WIRELESS IN FIXTURE SENSOR (8-11 FT MOUNT) = NXC-WIZ20
WIRELESS IN FIXTURE SENSOR (8-40 FT MOUNT) = NXC-WHS20-L (8'), -M (20'), or -H (40')
WIRELESS BATTERY SWITCH, SURFACE MOUNT = NXC-WWD-#SM
WIRELESS BATTERY SWITCH, IN-WALL MOUNT = NXC-WWD-#IW
WIRELESS KINETIC SWITCH, SURFACE MOUNT = NXC-ZBT

WATTSTOPPER:

WALL BOX SENSORS:
STANDALONE SINGLE RELAY = #DW-100
STANDALONE 0-10V DIMMING WITH SINGLE RELAY = #PW-311
STANDALONE DUAL RELAY = #DW-200
SYSTEM-BASED DIMMING CONTROL = #LMDW-102

CEILING SENSORS:
ONE-WAY DIRECTIONAL = (WIRED) #LMDC-100 WITH MASKING AS REQUIRED
(PIR-ONLY WIRELESS) #LMPC-600 SERIES
WITH MASKING AS REQUIRED.
360 DEGREE COVERAGE = (WIRED) #LMDC-100
(PIR-ONLY WIRELESS) #LMPC-600 SERIES

DAYLIGHT SENSORS:
OPEN LOOP SENSOR = (WIRED) #LMLS-500 (1-3 ZONE)
(WIRELESS) #LMDL-600 (1-3 ZONE)
CLOSED LOOP SENSOR = (WIRED) #LMLS-400 (1 ZONE ONLY)
REMOTE CONTROL = #LMCT-100 (HAND TO OWNER AT COMPLETION OF PROJECT.)

CONTROL UNITS:
SWITCHED = (WIRED) #LMRC-10? (NUMBER OF RELAYS AS REQUIRED)
(WIRELESS) #LMRC-6??MCC
CONTINUOUS DIMMING (O-10V, WIRED) = #LMRC-21? (NUMBER OF RELAYS AS REQUIRED).
CONTINUOUS DIMMING (O-10V, WIRELESS) = #LMRC-6??MCC (NUMBER OF RELAYS AS REQUIRED).
CONTINUOUS DIMMING (UNIVERSAL, WIRED) = #LMRC-22? (NUMBER OF RELAYS AS REQUIRED).
RECEPTACLE CONTROL = #LMPL-101 OR LMPL-201 (WHERE MORE THAN 4 RECEPTACLE
CONTROL UNIT SARE TIED TOGETHER)
#BZ-250 (WHEN USING WIRELESS CONTROL UNIT)
#LMPL-6?? (WHEN AVAILABLE)
HVAC CONTROL = (WIRED) #LMRL-100
(WIRELESS) #LMRC-6??MCC
AV SYSTEM SERIAL INTERFACE = (WIRED) #LMDI-100
ADD WIRELESS BRIDGE FOR WIRELESS SYSTEM.
MOVEABLE PARTITION INTERFACE & SENSOR = PARTITION INTERFACE - #LMIO-102
PARTITION SWITCH/STATUS INDICATOR - #LMPS-104
POWER PACK - #BZ-50 (SENSOR POWER)
PARTITION SENSOR - #ENTERTAINMENT NETWORKS SENSOR
W/ BOTTOM COVER (www.entertainmentworks.com).
ADD WIRELESS BRIDGE FOR WIRELESS SYSTEM.
DUAL MODE CORRIDOR/STAIRWAY/AISLEWAY CONTROL INPUT = #LMZC-301, UNLESS OTHERWISE NOTED.

WALL CONTROLS:
DIMMING = (WIRED) #LMSW-101/102/103/104/108
(# OF SWITCHES AS REQUIRED 4/YOKE MAX)
(WIRELESS) #LMDM-601
(# OF SWITCHES AS REQUIRED 4/YOKE MAX)
KEYED SWITCH = #LMIO-101 INPUT INTERFACE
W/ LEVITON #1221-2L-? KEYED SWITCH
TOUCH SCREEN = 4.3-INCH CAPACITIVE TOUCH #LMEQ-41
W/ WATTSTOPPER #LMTI-100-[VOLT] INJECTOR

NETWORK COMM COMPONENTS:
ZONE SEGMENT MANAGER = (WIRED OR WIRELESS) #LMSM-3E/#LMSM-6E
W/#LMSM-ENC1 ENCLOSURE.
NETWORK BRIDGE / ROUTER / SWITCH = (WIRED) #LMBC-300/#NB-ROUTER/#NB-SWITCH
(WIRELESS) #LMBC-600/#LMBR-650/#NB-SWITCH
NETWORK WIRING = (WIRED) #LM-MSTP.

NETWORK RELAY PANEL: LMCP8, 24, OR 48

EMERGENCY POWER INTERFACE:
POWER FAILURE ONLY:
SWITCHING / STEP DIMMING = #ELCU-200 BYPASS DEVICE.
CONTINUOUS DIMMING = #ELCU-200 BYPASS DEVICE.
POWER FAILURE OR FIRE ALARM ACTIVATION:
SWITCHING / STEP DIMMING = LVS #EPC2 BYPASS DEVICE W/ LVS REMOTE POWER SUPPLY (#TR-A-2)
0-10V DIMMING = LVS #EPC2D BYPASS DEVICE W/ LVS REMOTE POWER SUPPLY (#TR-A-2)
REVERSE/FORWARD PHASE DIMMING = LVS #EPCDFATS BRANCH CIRCUIT EMERGENCY TRANSFER SWITCH (BCELTS)
REMOTE POWER SUPPLY SHALL UTILIZE UNSWITCHED EMERGENCY CIRCUIT SERVING RESPECTIVE EMERGENCY FIXTURES.

LOAD INTERFACE DEVICE:
LUTRON COMPONENTS = LUTRON #BCI-0-10.
REVERSE/FORWARD PHASE DIMMING COMPONENTS = LUTRON #PHPM-PA-DV-WH.

Copyright © 2025
All ideas, designs, arrangements and plans indicated or represented by this drawing are owned by, and the property of, NICHOLS, MELBURG and ROSSETTO and were created, evolved and developed for use on, and in conjunction with, the specified project. None of such ideas, designs, arrangements or plans shall be used by, or disclosed to any person, firm or corporation for any purpose whatsoever without the written permission of NICHOLS, MELBURG and ROSSETTO.

NICHOLS MELBURG & ROSSETTO
ARCHITECTS + ENGINEERS
300 KNOLLCREST DRIVE
REDDING, CA. 96002
(530) 222-3300 (530) 222-3538 FAX
http://www.nmrdesign.com

CONSULTANTS

tk1sc
Member of WSP
11870 Pierce Street, Suite 160
Riverside, California 92505
951.299.4160 www.tk1sc.com
Project Leader - Jerry Leonhardt
Electrical Lead - Jerry Leonhardt
WSP Job #: B2305166.000

LICENSE STAMPS

REGISTERED PROFESSIONAL ENGINEER RAYMOND W. SWARTZ No. E15610 Exp. 12/31/2025 ELECTRICAL STATE OF CALIFORNIA

PROJECT NAME

TEHAMA COUNTY CORNING VETERAN'S HALL
1620 SOLANO ST.
CORNING, CA

SHEET TITLE

DISTRIBUTED LIGHTING CONTROL SCHEDULE & PRODUCT SPECIFICATIONS

DRAWING STATUS

CONSTRUCTION DOCUMENTS

REVISIONS

Sym.	Description	Date

Drawn By	
Date Issued	2/13/2025
Scale	-
Project No.	21-6497

SHEET No.

E4.2

Login Name: USGL700366
Plot Date: February 13, 2025 - 9:33 am
File Name: P:\2023\B2305166.000 Corning Veterans Hall Remod\Drawings and Models\CAD\Electrical\E4-2.dwg
XREFS: x-CVH_Title Block

DISTRIBUTED LIGHTING CONTROLS SYSTEM SPECIFICATIONS (OCCUPANCY / VACANCY SENSORS AND DAYLIGHTING CONTROLS):

1. SEE LIGHTING PLAN DRAWINGS FOR DISTRIBUTED LIGHTING CONTROL SYSTEM (DLCS) SPECIFICS, SPACE SPECIFIC CONFIGURATIONS/REQUIREMENTS, AS WELL AS FIXTURE BALLAST/DRIVER CONFIGURATIONS.

2. ALL PRODUCTS SHALL BE BACKED BY A FIVE YEAR MANUFACTURER'S WARRANTY.

3. ALL PRODUCTS LISTED IN THIS SPECIFICATION ARE BASED UPON PRODUCTS LISTED ON THIS SHEET. THE FEATURES AND CHARACTERISTICS OF THE PRODUCT LITERATURE AND SPECIFICATION SHEETS AVAILABLE ON THE VARIOUS MANUFACTURER'S WEB-SITES ARE INCLUDED IN THE REQUIREMENT OF THESE SPECIFICATIONS. ALL DLCS NETWORKED/NON-NETWORKED SYSTEM-BASED AND STANDALONE COMPONENTS SHALL BE PROVIDED BY A SINGLE MANUFACTURER.

4. DLCS COMPONENTS SHALL BE COMPLIANT WITH ALL APPLICABLE FEDERAL, STATE AND LOCAL ENERGY CODES.

5. ALL NETWORKED AND NON-NETWORKED SYSTEM-BASED DLCS SYSTEMS SHALL BE COMPLIANT WITH AND CERTIFIED TO THE FOLLOWING SECURITY STANDARDS SET FORTH IN THE LATEST PUBLISHED VERSION OF THE DESIGNLIGHTS CONSORTIUM'S "NETWORKED LIGHTING CONTROL SYSTEM TECHNICAL REQUIREMENTS" DOCUMENT (VERSION 4.0 OR LATEST PUBLISHED VERSION):

   - DLCS COMPONENTS: UL2900-1 UL STANDARD FOR SOFTWARE CYBER SECURITY FOR NETWORK-CONNECTABLE PRODUCTS.

   - DLCS DESIGN PROCESS: UL 2900-1 UL STANDARD FOR SOFTWARE CYBER SECURITY FOR NETWORK- CONNECTABLE PRODUCTS AND/OR ISO/IEC 27001 STANDARD FOR INFORMATION SECURITY MANAGEMENT SYSTEMS.

   - DLCS CLOUD SERVICES: ANY ASSOCIATED DLCS CLOUD SERVICES SHALL MEET THE REQUIREMENTS OF ISO/IEC 27017 (WITH 27001) STANDARD FOR CODE OF PRACTICE FOR INFORMATION SECURITY CONTROLS FOR CLOUD SERVICES.

   WHERE THE MANUFACTURER CANNOT DEMONSTRATE COMPLIANCE WITH THE ABOVE REQUIREMENTS, THE DLCS MANUFACTURER SHALL PROVIDE A COMPREHENSIVE PRODUCT-SPECIFIC IT SECURITY STATEMENT FOR REVIEW BY THE OWNER. THE DLCS SHALL NOT BE CONNECTED TO AN OWNER-FURNISHED NETWORK WITHOUT PRIOR WRITTEN PERMISSION BY THE OWNER,

   ADDITIONALLY, WHERE INSTALLED IN THE STATE OF CALIFORNIA, SYSTEM-BASED DLCS SYSTEMS SHALL BE COMPLIANT WITH CA STATE ASSEMBLY BILL NO. 375 CALIFORNIA PRIVACY ACT OF 2018 AND CA STATE SENATE BILL NO 327 INFORMATION PRIVACY FOR CONNECTED DEVICES.

6. WHERE THE DLCS SCHEDULE INDICATES A SPECIFIC "SYSTEM TOPOLOGY" OPTION, PROVIDE ONE OF THE FOLLOWING:

   "NETWORKED" - PROVIDE A SYSTEM-BASED DLCS THAT COMMUNICATES USING A MANUFACTURER-SPECIFIC DLCS NETWORK ALLOWING BI-DIRECTIONAL FLOW OF INFORMATION BETWEEN DEVICES SUCH AS ROOM CONTROLLERS, SENSORS, RELAY PANELS AND NETWORK CONTROLLERS. PROVIDE A DLCS GUI AND RELATED SOFTWARE TO FACILITATE REMOTE DLCS DEVICE PARAMETERS CHANGES, REMOTE CONTROL ANY DLCS ELEMENT OR DEVICE, REMOTE SCHEDULE CHANGES/IMPLEMENTATIONS, AND REMOTE DLCS COMMISSIONING AND TROUBLESHOOTING. A NETWORKED SYSTEM TOPOLOGY SHALL BE CONFIGURED TO RESPOND TO LOCAL UTILITY DEMAND RESPONSE SIGNALS.

   "NON-NETWORKED" - PROVIDE A SYSTEM-BASED DLCS THAT COULD BE MADE TO COMMUNICATE USING A MANUFACTURER-SPECIFIC DLCS NETWORK, BUT FOR THIS PROJECT IS CONFIGURED WITHOUT ANY NETWORK CONNECTIVITY OR NETWORK COMPONENTS, EXCEPT FOR ANY NETWORK COMPONENTS REQUIRED FOR DUAL MODE CONTROL FOR CORRIDORS, WAREHOUSE AISLES ETC OR WHERE REQUIRED FOR BAS INTEGRATION REQUIRED IN THE DLCS SCHEDULE OR ELSEWHERE IN THE DRAWINGS AND SPECIFICATIONS. IN A "NON-NETWORKED" DLCS, DEMAND RESPONSE CAPABILITY IS NOT REQUIRED.

   "STAND ALONE" - PROVIDE INDIVIDUAL WALL SENSORS/CONTROLS - OPERATING AT 120V OR 277V. GENERALLY, STANDALONE COMPONENT INSTALLATIONS ARE TO BE AVOIDED AND ARE LIMITED TO USE IN SMALL ROOMS WHERE ADVANCED CONTROLS, DIMMING CAPABILITY, DEMAND RESPONSE, DUAL MODE CONTROL AND/OR NETWORK CONNECTIVITY ARE NOT REQUIRED BY APPLICABLE ENERGY CODE AND WHERE ACCEPTABLE TO AN END-USER.

7. WHERE THE DLCS SCHEDULE INDICATES A SPECIFIC "COMMUNICATIONS TOPOLOGY" OPTION, PROVIDE ONE OF THE FOLLOWING:

   "WIRED" - PROVIDE WIRING, AS REQUIRED, TO INTERCONNECT DLCS DEVICES. WIRING MAY BE A COMBINATION OF LOW AND LINE VOLTAGE CONDUCTORS BASED ON SPECIFIC MANUFACTURER REQUIREMENTS.

   "WIRELESS" - PROVIDE WIRELESS CONNECTIVITY BETWEEN WALL CONTROLS, WALL, CEILING OR FIXTURE-INTEGRATED SENSORS, ROOM CONTROLLERS, WIRELESS ROUTER(S), AND WIRELESS NETWORK BRIDGES. CONTRACTOR SHALL PROVIDE WIRELESS ROUTERS, QTY AS REQUIRED, TO MAINTAIN ROBUST COMMUNICATIONS WITH ALL WIRELESS DEVICES. ROBUST MEANS THAT A CHANGE OF VALUE FROM OR TO ANY DLCS SYSTEM COMPONENT FROM OR TO AN APPLICABLE WIRELESS ROUTER/BRIDGE OCCURS IN LESS THAN 3 SECONDS.

   "HYBRID" - WHERE A SOLELY WIRELESS DLCS TOPOLOGY IS DEEMED INADEQUATE BASED ON OPERATIONAL OR AESTHETIC REASONS, A WIRELESS TOPOLOGY SHALL BE AUGMENTED WITH WIRED SYSTEM TO FORM A HYBRID COMMUNICATIONS TOPOLOGY. AREAS REQUIRING WIRED CONNECTIVITY SHALL BE OUTLINED ON THE LIGHTING PLANS AND UNLESS OTHERWISE INDICATED, ALL RESTROOMS SHALL BE PROVIDED WITH DUAL TECHNOLOGY OCCUPANCY SENSORS WHICH REQUIRE WIRED CONNECTIVITY AND WIRED POWER SUPPLY. A NETWORKED, SYSTEM-BASED DLCS INSTALLED WITH A HYBRID COMMUNICATIONS TOPOLOGY SHALL APPEAR IN THE USER GUI/SOFTWARE AS A SINGLE UNIFIED SYSTEM. SEPARATE GUI SOFTWARE INTERFACES FOR THE WIRED AND WIRELESS PORTIONS OF THE DLCS ARE UNACCEPTABLE.

9. WHERE THE DLCS SCHEDULE REQUIRES FIXTURE-INTEGRATED SENSORS, PROVIDE OCCUPANCY AND/OR DAYLIGHT SENSORS INTEGRATED WITHIN SPECIFIED FIXTURE TYPE THAT ALSO INTEGRATE INTO THE DLCS. SEE THE LIGHTING FIXTURE SCHEDULE FOR AFFECTED FIXTURE TYPE(S). WHERE INTEGRATED SENSORS DO NOT MEET OCCUPANCY/DAYLIGHT SENSOR COVERAGE REQUIREMENTS, CONTRACTOR SHALL AUGMENT COVERAGE WITH ADDITIONAL CEILING MOUNTED SENSORS AS REQUIRED AND AS A PART OF THE BASE BID.

10. WHERE THE DLCS SCHEDULE REQUIRES THE DLCS TO INTEGRATE WITH THE PROJECT'S BUILDING AUTOMATION SYSTEM (BAS) - SEE THE DLCS START-UP, BUILDING AUTOMATION SYSTEM (BAS) INTEGRATION, COMMISSIONING, & TRAINING PORTION OF THIS SPECIFICATION FOR ADDITIONAL REQUIREMENTS.

11. WHERE THE DLCS SCHEDULE INDICATES "WIRELESS" OR "HYBRID" COMMUNICATIONS TOPOLOGIES AND ALSO ALLOWS WIRELESS DLCS COMPONENT BATTERY USAGE, PROVIDE BATTERIES WITHIN THE WIRELESS DLCS COMPONENTS INDICATED IN LIEU OF LINE OR LOW VOLTAGE POWER SOURCES.

12. DLCS COMPONENTS SHALL BE BE PROVIDED AS FOLLOWS:

   a. STANDALONE: WALL MOUNTED OCCUPANCY SENSORS SHALL BE UL LISTED AND HAVE A MINIMUM LOAD CAPACITY OF 800 WATTS AT 120 VOLTS AND 1200 WATTS AT 277 VOLTS. WALL SENSORS SHALL ALSO BE DECORA STYLE, WITH A LOW-PROFILE APPEARANCE AND A HARD LENS FOR DURABILITY. SENSOR SHALL UTILIZE PASSIVE INFRARED TECHNOLOGY (PIR) AND ULTRASONIC/MICROPHONIC TECHNOLOGY. UNIT SHALL BE RATED FOR 120/277 VOLT WITH NO MINIMUM LOAD, COMPATIBLE WITH ALL THE SPECIFIED BALLASTS, PROVIDED WITH A NEUTRAL CONNECTION (NO LEAKAGE TO GROUND) AND NO LEAKAGE TO LOAD IN THE "OFF" MODE. SENSOR SHALL BE UTILIZED IN SPACES NOT EXCEEDING 150 SQ.FT. SINGLE RELAY SENSORS SHALL BE CONFIGURED WITH THE RELAY IN A "MANUAL ON/ AUTO OFF" SETTING. DUAL RELAY SENSORS SHALL BE CONFIGURED WITH THE FIRST RELAY IN A "AUTOMATIC ON/ AUTOMATIC OFF" SETTING AND THE SECOND RELAY IN A "MANUAL ON/ AUTOMATIC OFF" SETTING. FACTORY STANDARD COLOR TO BE APPROVED BY ARCHITECT.

   b. SYSTEM-BASED (NETWORK OR NON-NETWORK): THE OCCUPANCY SENSOR SYMBOL SHALL REPRESENT A LOW VOLTAGE, WALL MOUNTED OCCUPANCY SENSOR CONNECTED TO A CONTROL UNIT(S) AS REQUIRED. SENSOR SHALL BE DECORA STYLE WITH A LOW-PROFILE APPEARANCE, HAVE ON/OFF/RAISE/LOWER BUTTONS, AND A HARD LENS FOR DURABILITY. FACTORY STANDARD COLOR TO BE APPROVED BY ARCHITECT.

      SYSTEM-BASED (NETWORK OR NON-NETWORK) OR STANDALONE CEILING MOUNTED OCCUPANCY SENSORS SHALL SHALL REPRESENT A LOW VOLTAGE, CEILING-MOUNTED OCCUPANCY SENSOR WITH A LOW-PROFILE APPEARANCE AND SHALL BE CONFIGURED IN ONE OF THE FOLLOWING WAYS AS INDICATED ON THE DRAWINGS:

      - AUTO ON: a/b

      - SWITCHED: AUTO ON a / MANUAL ON b

      - CONTINUOUS DIMMED: AUTO ON 50% a / MANUAL ON 100% a

   c. SENSOR(S) SHALL UTILIZE DUAL TECHNOLOGY (PIR AND ULTRASONIC/MICROPHONIC TECHNOLOGY) WITH 360 DEGREE COVERAGE. IN SPACES WITH DESKTOP ACTIVITIES, THE COVERAGE SHALL BE "HAND MOTION" AND SHALL NOT EXCEED 500 SQ. FT. AT A MAXIMUM CEILING HEIGHT OF 10 FT. IN CORRIDORS, STORAGE ROOMS AND OTHER SPACES WITH NON-DESKTOP ACTIVITIES, COVERAGE SHALL BE "HALF-STEP, WALKING MOTION" AND SHALL NOT EXCEED 1200 SQ. FT. AT A MAXIMUM CEILING HEIGHT OF 10 FT. PIR-ONLY WIRELESS OCCUPANCY SENSORS SHALL NOT BE UTILIZED IN RESTROOMS OR LOCKER ROOMS.

   d. "H" AT THE OCCUPANCY SENSOR INDICATES CONNECTION TO AUXILIARY OUTPUT CONTROL DEVICE FOR CONTROL OF A THIRD PARTY DEVICE VIA LOW-VOLTAGE CONTACT CLOSURES - 1 AMP @ 24V AC/DC. NC/NO RELAYS SHALL BE CONNECTED TO A CONTROLLER TO PERFORM THE AUXILIARY CONTROL REQUIREMENTS INDICATED BY THE DRAWINGS.

   e. OCCUPANCY SENSORS LOCATED WITHIN CORRIDORS, HALLWAYS, STAIRWAYS/WELLS, AISLEWAYS WITHIN WAREHOUSE SPACES, AND IN OTHER AREAS PER PLANS AND/OR SOO SHALL BE CONFIGURED TO CREATE DUAL MODE CONTROL FUNCTIONALITY PER THE SOO/ZONE SCHEDULE. CONTRACTOR SHALL BE RESPONSIBLE FOR PROVIDING ALL DEVICES AND WIRING REQUIRED FOR DUAL MODE OPERATIONS AND ANY PROGRAMMING/CONFIGURATION OF TIME-BASED OPERATING PARAMETERS. COORDINATE WITH OWNER TO DETERMINE BUSINESS HOUR/AFTER BUSINESS HOUR MODES. IF THE PLANS IDENTIFY A NEW OR EXISTING LIGHTING CONTROL PANEL AS THE SOURCE OF DUAL MODE TIMING, E.C. SHALL INCLUDE ALL COSTS TO INSTALL ANY NECESSARY I/O TERMINALS, CARDS, ETC. TO MAKE THE SYSTEM FULLY FUNCTIONAL.

   f. NETWORK SYSTEM-BASED DLCS SYSTEMS SHALL PROVIDE/RESULT IN "LADDERLESS COMMISSIONING" OF DAYLIGHT CONTROLS. AT A MINIMUM, NETWORK ACQUIRED DATA SHALL PROVIDE CT-BASED LIGHTING POWER (WATTS) MEASUREMENTS PER THE COMMISSIONING PORTION OF THESE REQUIREMENTS. PROVIDE NETWORKED CONTROL UNITS/POWER PACKS/INTERFACES AND MISCELLANEOUS EQUIPMENT AS FOLLOWS:

      1) NETWORK SEGMENT MANAGER OR BORDER ROUTER WITH NATIVE BACnet IP - QUANTITY AS REQUIRED BASED UPON A MAXIMUM OF 100 LOCAL ROOM NETWORKS PER SEGMENT AND A MINIMUM OF ONE SEGMENT MANAGER PER FLOOR. THIS EQUIPMENT SHALL BE LOCATED IN THE TYPICAL FLOOR ELECTRICAL ROOM.

      2) NETWORK BRIDGE CONNECTING THE SEGMENT MANAGER TO THE CONTROLLER SUB/LOCAL NETWORK.

      3) ALL CORRIDORS, WAREHOUSE AISLE WAYS, AND STAIRWELLS SHALL BE PROVIDED WITH DUAL MODE CORRIDOR/STAIRWAY CONTROLS TO INCLUDE CEC-LISTED TIME CLOCK(S), ROUTERS, OR SYSTEM GATEWAYS, INTERPOSING RELAYS (WHEN INTERFACING WITH EXISTING CEC-LISTED RELAY PANELS), WIRING, 120V POWER, PROGRAMMING, ETC. NECESSARY FOR A COMPLETE AND FUNCTIONING CONTROL SYSTEM.

      4) INCLUDE ALL COSTS IN BASE BID TO PROVIDE 120V CIRCUIT(S) AND RECEPTACLE(S) NECESSARY TO POWER ALL DEMAND RESPONSE EQUIPMENT.

      5) PROVIDE DATA OUTLET/PATHWAY, DATA CABLING (IF REQUIRED ELSEWHERE BY PROJECT DOCUMENTS), AND CONNECTION TO THE PROJECT'S LOCAL AREA NETWORK.

      6) INCLUDE ALL COSTS IN BASE BID TO PROVIDE 120V CIRCUIT(S) AND RECEPTACLE(S) NECESSARY TO POWER ALL NETWORK SEGMENT MANAGERS, SWITCHES AND ROUTERS.

      7) DEMONSTRATE DLCS RESPONSE TO A SIMULATED DEMAND RESPONSE REQUEST AS PART OF THE LIGHTING COMMISSIONING PROCESS. WHERE MORE THAN ONE WIRING TOPOLOGY AND/OR ZONE IS REQUIRED TO ACCOMPLISH DEMAND RESPONSE - ALL WIRING TOPOLOGIES AND ZONES SHALL BE TESTED ACCORDINGLY. SEE DLCS SOO FOR POWER REDUCTION PERCENTAGES BY ROOM TYPE THAT SHALL BE UTILIZED IN THE SIMULATED DEMAND RESPONSE TESTING.

   g. WHERE INDICATED ON DRAWINGS, PROVIDE DLCS DAYLIGHTING CONTROLS AS FOLLOWS:

      1) AUTOMATIC SWITCHING DAYLIGHTING CONTROLS SHALL BE PROVIDED TO SWITCH SELECTED FIXTURES AND/OR LAMPS OFF AND ON BASED UPON LIGHTING LEVELS PRESENT IN THE CONTROLLED SPACE. THE DAYLIGHTING CONTROLS SHALL BE CONNECTED TO THE CONTROL UNIT. THE SENSOR SHALL UTILIZE AN INTEGRAL PHOTO DIODE TO MEASURE AMBIENT LIGHT LEVELS. CONTROLS SHALL BE FULLY ADJUSTABLE FROM 1 TO 6,500 FOOTCANDLES AND SHALL BE PROVIDED WITH AN ADJUSTABLE TIME DELAY AND ADJUSTABLE DEAD BAND SETTINGS.

      2) AUTOMATIC DIMMING DAYLIGHTING CONTROLS SHALL BE PROVIDED TO CONTINUOUSLY DIM SELECTED FIXTURES/LAMPS UP AND DOWN BASED UPON LIGHTING LEVELS PRESENT IN THE CONTROLLED SPACE. THE SENSOR SHALL UTILIZE AN INTERNAL PHOTO DIODE TO MEASURE AMBIENT LIGHT LEVELS. 0-10 VOLT DIMMING CONTROLS SHALL RANGE FROM 0.2 VOLTS TO 10 VOLTS, WITH AMBIENT LIGHTING SET POINTS FROM 1-6,500 FOOTCANDLES.

      3) AUTOMATIC DAYLIGHTING CONTROLS SHALL BE CONNECTED TO CONTROL UNITS TO PERFORM THE FIXTURE SWITCHING/DIMMING REQUIREMENTS INDICATED BY THE DRAWINGS - CONNECTIONS DIRECTLY TO A BALLAST ARE NOT ALLOWED.

      4) DAYLIGHT SENSOR SHALL PROVIDE CONTROLS FOR UP TO THREE DISTINCT LIGHTING ZONES TO ALLOW SEPARATE CONTROL OF PRIMARY DAYLIT, SECONDARY DAYLIT, AND SKYLIT ZONES.

   h. PROVIDE CONTROL UNITS AND SYSTEM FUNCTIONALITY AS FOLLOWS:

      1) CONTINUOUS DIMMING CONTROLS: SYSTEM-BASED WALL OR CEILING MOUNTED OCCUPANCY SENSORS (CONTINUOUS DIMMED - AUTO ON 50%/MANUAL ON 100%) SHALL BE PROVIDED WITH CONTROL UNITS TO PERFORM THE FIXTURE DIMMING REQUIREMENTS INDICATED BY THE BALLAST AND FIXTURE TYPE. SWITCH LEG INDICATED OUTSIDE THE PARENTHESIS TO BE CONFIGURED AS "AUTO ON 50%/MANUAL ON 100%" FOR CONTINUOUS DIMMED. SWITCH LEGS INSIDE PARENTHESIS INDICATES A MANUAL ACTION REQUIRED TO INCREASE LIGHTING LEVELS ABOVE 50%. CONTROL UNITS WITH INTEGRAL TRANSFORMERS SHALL BE UTILIZED TO PROVIDE POWER TO OCCUPANCY SENSORS AND OTHER CONTROL DEVICES. CONTROL UNITS SHALL BE LOCATED WITHIN JUNCTION BOXES AND NOT EXPOSED IN THE CEILING SPACE. CONTROL UNIT SHALL BE 120/277 VOLT RATED WITH NO MINIMUM LOAD, COMPATIBLE WITH ALL THE SPECIFIED BALLASTS PROVIDED WITH A NEUTRAL CONNECTION (NO LEAKAGE TO GROUND) AND NO LEAKAGE TO LOAD IN THE "OFF" MODE. ADDITIONAL RELAY ZONES MAY BE REQUIRED FOR THE ADDITION OF PRIMARY DAYLIT, SECONDARY DAYLIT, AND PRIMARY SKYLIT UTILIZING THE SAME CONTROL CHANNEL. (I.E. EVEN THOUGH A SINGLE LETTER "a" IS INDICATED AT THE PRIMARY SENSOR), ADDITIONAL RELAYS WOULD BE REQUIRED FOR THE "a+" (PRIMARY SIDELIT DAYLIT ZONE), "a++" (SECONDARY SIDELIT DAYLIT ZONE), AND "a*" (SKYLIT DAYLIT ZONE). WHERE MORE THAN ONE CIRCUIT/THREE SWITCH LEGS/THREE RELAY ZONES ARE REQUIRED, PROVIDE ADDITIONAL FULL FEATURE CONTROL UNITS AS REQUIRED.

      2) WHERE ADDITIONAL 120/ 277 VOLT DEVICES, RECEPTACLES, OR BRANCH CIRCUITS ARE BEING CONTROLLED BY THE ROOM CONTROLLER, AN ADDITIONAL CONTROL UNIT SHALL BE PROVIDED AS REQUIRED.

      3) THE OCCUPANCY SENSOR CONTROLLED RECEPTACLE BRANCH CIRCUIT RELAY, CONNECTED TO THE SPACE'S DISTRIBUTED LIGHTING CONTROL OCCUPANCY SENSOR RELAY, SHALL TURN ON WHEN THE ROOM IS OCCUPIED, REGARDLESS OF THE CONFIGURATION OF THE LIGHTING CONTROL STATE - I.E. AUTO ON/MANUAL ON. SEE THE DISTRIBUTED LIGHTING CONTROL SPECIFICATION FOR MORE INFORMATION. EVEN THOUGH A SINGLE SYMBOL IS INDICATED, MULTIPLE RELAYS MAY BE REQUIRED TO CONTROL THE REQUIRED NUMBER OF SWITCHLEGS/CIRCUITS.

      4) LOW VOLTAGE WALL CONTROLS SHALL BE DECORA STYLE, LOW-VOLTAGE, MOMENTARY SWITCHES WITH COLOR TO MATCH OTHER WALL DEVICES/SWITCHES. LOWER CASE LETTERS INDICATE SWITCHING CONFIGURATION. PROVIDE SWITCHING OR DIMMING CONTROL DEVICES AS REQUIRED BY DRAWINGS.

         DIMMING - NUMBER OF SWITCHES AS REQUIRED - 4 ZONES/YOKE MAX. EACH CONTROL ZONE TO HAVE A DEDICATED RAISE AND LOWER BUTTONS. FACTORY STANDARD COLOR BY ARCHITECT. EACH MULTI-ZONE DIMMING CONTROL STATION SHALL BE PROVIDED WITH MASTER ON AND MASTER OFF BUTTON IN ADDITION TO THE INDIVIDUAL CONTROL ZONE BUTTONS.

         WHERE INDICATED, PROVIDE VANDAL RESISTANT, HIGH ABUSE SWITCH CONNECTED TO THE DLCS INPUT/OUTPUT INTERFACE DEVICE FOR ON/ OFF AND DIMMING CONTROLS. SWITCHES LOCATED IN HIGH ABUSE AREAS (EXTERIOR AREAS OR AREAS SUBJECT TO WASH-DOWN ETC.) OR IDENTIFIED ON PLANS AS HIGH-ABUSE SWITCHES SHALL BE VANDAL RESISTANT, STAINLESS STEEL, TOUCH SENSITIVE AND AVAILABLE WITH UP TO TWO BUTTONS IN A SINGLE GANG. EACH HIGH ABUSE SWITCH SHALL BE ABLE TO BE PROGRAMMED FOR ON, OFF, TOGGLE OR MAINTAIN OPERATION. SWITCHES MUST BE CAPABLE OF HANDLING ELECTROSTATIC DISCHARGES OF AT LEAST 30,000 VOLTS (1CMSPARK) WITHOUT ANY INTERRUPTION OR FAILURE IN OPERATION.

         WHERE INDICATED, PROVIDE A LOCKING SINGLE POLE SWITCH CONNECTED TO THE ROOM CONTROLLER VIA A INPUT/OUTPUT INTERFACE DEVICE FOR ON/OFF CONTROLS. DIRECT CONNECTION OF THE KEYED SWITCH ON THE LOAD SIDE OF THE CONTROLLER IS PROHIBITED. PROVIDE AT LEAST THREE (3) KEYS TO OWNER AT CONCLUSION OF PROJECT. ADJACENT SWITCH SHALL ONLY BRING LIGHTS FULL ON. KEYED SWITCH ALLOWS MANUAL OFF FUNCTIONALITY. DIMMER SWITCH ALLOWS AUTO-ON 50% OVERRIDE TO 100% ALL-ON AND SHALL NOT ALLOW LIGHTING LEVELS TO DECREASE IN ANY WAY.

   i. WHEN LIGHTING SYSTEM IS INDICATED WITH A CONNECTION TO A REMOTE EMERGENCY POWER SOURCE (I.E. AN INVERTER OR GENERATOR) PROVIDE UL924 LISTED INTERFACE EQUIPMENT TO ALLOW THE OVERRIDE OF THE LOCAL SWITCHING AND/OR DIMMING CONTROLS DURING A POWER OUTAGE.

   j. WHEN LIGHTING FIXTURES/CONTROLS ARE PROVIDED WITH LUTRON 3-WIRE DIMMING BALLASTS, AN INTERFACE DEVICE SHALL BE PROVIDED TO ALLOW 0-10V CONTROL OF LUTRON 3-WIRE DIMMING BALLASTS. MOUNT INTERFACE IN A NEMA1 ENCLOSURE IN ACCESSIBLE CEILING SPACE ADJACENT TO ITS ASSOCIATED CONTROL UNIT.

   k. WHEN LIGHTING FIXTURES/CONTROLS ARE LINE VOLTAGE DIMMED OR PROVIDED ELECTRONIC LOW-VOLTAGE, MAGNETIC LOW-VOLTAGE, NEON/COLD CATHODE, LUTRON "TU-WIRE" DIMMING BALLASTS, AN INTERFACE DEVICE SHALL BE PROVIDED TO ALLOW LINE VOLTAGE CONTROL. MOUNT INTERFACE IN A NEMA1 ENCLOSURE IN ACCESSIBLE CEILING SPACE ADJACENT TO ITS ASSOCIATED CONTROL UNIT.

   l. WHEN AV SYSTEM INTERFACE IS INDICATED, PROVIDE TWO-WAY CAPABLE RS-232 COMMUNICATIONS INTERFACE TO ALLOW AV CONTROL SYSTEM TO CALL ADDRESSABLE LIGHTING/ROOM SCENES. COMMUNICATIONS INTERFACE SHALL PROVIDE FEEDBACK TO THE AV CONTROL SYSTEM FOR LIGHT LEVEL STATUS.

   m. WHEN MOVEABLE PARTITION INTERFACE IS INDICATED, PROVIDE ALL COMPONENTS, SENSORS, WIRING, POWER SUPPLIES AND PROGRAMMING NECESSARY TO MONITOR AND REPORT MOVEABLE PARTITION(S) OPEN/CLOSED STATUS. DLCS SYSTEM SHALL AUTOMATICALLY ADOPT SINGLE ROOM OR MULTI-ROOM CONTROL PROFILES AS REQUIRED BY PARTITION STATUS.

   n. WHEN NETWORKED LIGHTING CONTROL RELAY PANEL(S) ARE INDICATED, PROVIDE ALL COMPONENTS, WIRING, AND PROGRAMMING NECESSARY TO INTEGRATE RELAY PANELS WITHIN THE DLCS SYSTEM.

13. GENERAL SYSTEM REQUIREMENTS:

   a. ALL EQUIPMENT SHALL FEATURE A PRE-SET DEFAULT OPERATION. UPON INITIAL POWER UP, THE SYSTEM SHALL AUTOMATICALLY IDENTIFY THE DEVICES ON THE LOCAL NETWORK, THEN ENTERS THE PRE-SET CONFIGURATION TO ALLOW BASIC OPERATION OF ALL DEVICES. IN MOST APPLICATIONS THE RELATIONSHIP BETWEEN QUANTITY OF LOADS, SWITCHES AND OCCUPANCY SENSORS WILL NOT REQUIRE ANY ADJUSTMENTS - ALTHOUGH AN ADJUSTMENT TO THE AUTOMATIC SETTINGS SHALL BE INCLUDED IN THE BASE BID.

   b. ALL EQUIPMENT SHALL FEATURE A CONFIGURATION (CONFIG) BUTTON ON MOST DEVICES THAT ALLOWS EASY ACCESS TO THE INTEGRATED AUTO-CONFIGURATION TECHNOLOGY TO MODIFY SYSTEM OPERATION. FUNCTIONALITY OF THE CONFIG BUTTON SHALL BE STANDARDIZED THROUGHOUT THE PRODUCT LINE, AS IS THE OPERATION OF THE CONFIG LED INDICATORS.

   c. NETWORK DLCS SYSTEM CONTROL/CONFIGURATION SOFTWARE SHALL BE PRE-CONFIGURED TO THE MAXIMUM EXTENT POSSIBLE OFF-SITE AT THE DLCS FACTORY OR ENGINEERING FACILITY. THE CONTRACTOR SHALL DOCUMENT EVERY NETWORK COMPONENT'S LOCATION (ROOM AND FLOOR NUMBER) AND ITS' RESPECTIVE SERIAL NUMBER OR OTHER DEVICE IDENTIFIER ON A FULL SIZE FLOOR PLAN IN PDF FORMAT. HANDWRITTEN DOCUMENTATION IS UNACCEPTABLE. THE PREFERRED ACCEPTABLE METHOD OF NETWORK COMPONENT DOCUMENTATION IS COLLECTION OF FACTORY-PROVIDED, SELF-ADHESIVE, BAR-CODE IDENTIFIERS DESIGNED TO BE REMOVED FROM NETWORK COMPONENTS AS THEY ARE INSTALLED IN THE FIELD. BAR CODES IDENTIFIERS SHALL BE APPLIED TO A PAPER COPY OF A FLOOR PLAN WHICH SHALL BE PROVIDED TO THE FACTORY FOR USE IN OFF-SITE DLCS NETWORK PROGRAMMING AND CONFIGURATION. THE RESULTS OF EITHER METHOD SHALL BE SCANNED AND SUBMITTED AS A PART OF THE PROJECT CLOSEOUT DOCUMENTATION.

   d. NETWORK SYSTEMS SHALL BE INSTALLED BY VENDOR-CERTIFIED CONTRACTOR FIELD PERSONNEL TO PERFORM NETWORK INSTALLATIONS INCLUDING ACCURATE, REPEATABLE COMMUNICATIONS CABLING TERMINATIONS (BOTH LAN AND MS/TP TYPE). INCLUDE CERTIFICATES FOR EACH CERTIFIED INSTALLER TO BE UTILIZED ON THE PROJECT AS A PART OF THE PROJECT SUBMITTALS. A CERTIFIED FIELD INSTALLER SHALL BE ON-SITE SUPERVISING COMMUNICATIONS CABLING AND CABLING TERMINATIONS AT ALL TIMES WHEN THIS WORK IS OCCURRING ON THE PROJECT.

   e. ANY BATTERY-POWERED DLCS COMPONENTS SHALL BE PROVIDED WITH A 10 YEAR EXPECTED BATTERY LIFE. EACH COMPONENT SHALL BE PROVIDED WITH BOTH A LOCAL LOW BATTERY INDICATION ON EACH DEVICE AND A SOFTWARE-BASED LOW BATTERY ALARM. WHERE A WIRELESS DLCS SYSTEM COMPONENT IS AVAILABLE EITHER AS A BATTERY POWERED DEVICE OR A LINE/LOW VOLTAGE POWERED DEVICE, PROVIDE THE LINE/LOW VOLTAGE VERSION ALONG WITH ANY LINE OR LOW VOLTAGE WIRING, CONDUIT AND BACK BOXES TO LIMIT THE NUMBER OF BATTERIES WITHIN THE DLCS INSTALLATION TO A MINIMUM.

14. INSTALLATION OF CONTROL UNITS, OCCUPANCY/VACANCY SENSORS AND DAYLIGHTING CONTROLS:

   a. IT SHALL BE THE CONTRACTOR'S RESPONSIBILITY TO LOCATE AND AIM SENSORS IN THE CORRECT LOCATION REQUIRED FOR COMPLETE AND PROPER VOLUMETRIC COVERAGE PER THE MANUFACTURER'S RECOMMENDATIONS. ROOMS SHALL HAVE NINETY (90) TO ONE HUNDRED (100) PERCENT COVERAGE AND SHALL ACCOMMODATE ALL HABITS OF SINGLE OR MULTIPLE OCCUPANTS AT ANY LOCATION WITHIN THE ROOM. THE LOCATIONS AND QUANTITIES OF SENSORS SHOWN ON THE DRAWINGS ARE DIAGRAMMATIC AND INDICATE ONLY THE ROOMS THAT ARE TO BE PROVIDED WITH SENSORS. THE CONTRACTOR SHALL PROVIDE ADDITIONAL SENSORS AS REQUIRED TO PROPERLY AND COMPLETELY COVER THE RESPECTIVE ROOM. WHERE PIR-ONLY WIRELESS CEILING OR FIXTURE-INTEGRAL OCCUPANCY SENSORS ARE UTILIZED, PROVIDE QUANTITY AS REQUIRED TO MAINTAIN THE SAME COVERAGE AND SAME MOVEMENT DETECTION SENSITIVITY AS PROVIDED BY WIRED DUAL TECHNOLOGY SENSORS. ADDITIONALLY, IT MAY BE NECESSARY FOR THE CONTRACTOR TO MAKE ADJUSTMENTS, CHANGE THE LOCATION OR TYPE OF SENSOR TO OBTAIN PROPER OPERATION IN A SPECIFIC ROOM. THE USE OF FACTORY-SUPPLIED INTERNAL MASKING (PIR) SHALL BE PROVIDED/INSTALLED AS REQUIRED TO LIMIT DETECTION TO WITHIN THE CONTROLLED SPACE ONLY. WHERE MASKING IS NOT AVAILABLE AS A FACTORY-SUPPLIED ITEM, ALTERNATE FACTORY-SUPPLIED MEANS OF COMPLIANCE OR METHODS MAY BE ACCEPTABLE. THE CONTRACTOR SHALL HAVE FINAL RESPONSIBILITY FOR PROPER OPERATION OF THE SYSTEM IN EACH ROOM AND SHOULD THEREFORE MAKE LABOR ALLOWANCES FOR CHANGES AND ADJUSTMENTS.

   b. CEILING MOUNTED SENSORS SHOULD BE LOCATED IN THE SPACE TO BE COVERED, A MINIMUM OF 4', PREFERABLY 5', AWAY FROM THE LATCH SIDE OF THE DOOR, 2" TO 3" AWAY FROM THE WALL AND 3' TO 4' FROM AN AIR SUPPLY REGISTER. DO NOT MOUNT SENSORS OVER A DOORWAY OR BEHIND A FULL HEIGHT DOOR. SENSORS SHALL BE AIMED IN THE DIRECTION OF THE SPACE TO BE COVERED. DO NOT AIM SENSORS TOWARD A DOORWAY. THE USE OF FACTORY SUPPLIED INTERNAL MASKING (PIR) SHALL BE PROVIDED/INSTALLED AS REQUIRED TO LIMIT DETECTION TO WITHIN THE CONTROLLED SPACE ONLY.

   c. ALL SENSORS SHALL BE ADJUSTED PER THE DLCS SOO/ZONE SCHEDULE. WHERE A ROOM TYPE IS NOT INDICATED ON THE DLCS SOO, ADJUST FOR FOR A TIME DELAY OF TWENTY (20) MINUTES.

   d. EACH DAYLIGHTING CONTROL SYSTEM/ZONE SHALL BE INSTALLED/ADJUSTED AS FOLLOWS:

      1) AUTOMATIC SWITCHING/DIMMING CONTROL PLACEMENT: IT IS IMPORTANT TO SELECT A LOCATION IN THE DAYLIGHTING ZONE WHERE THE DAYLIGHT CONTRIBUTION IS REPRESENTATIVE OF THE DAYLIGHTING THROUGHOUT THE ZONE. A GOOD LOCATION IS OFTEN BETWEEN THE WINDOW AND/OR DAYLIGHTING SOURCE AND THE FIRST ROW OF LIGHTING FIXTURES. AVOID INSTALLATIONS WITHIN 6'-0" OF A WINDOW, MORE THAN 15'-0" FROM A WINDOW, AND LESS THAN 4'-0" TO A LIGHTING FIXTURE WITH INDIRECT DISTRIBUTION.

      2) AUTOMATIC STEP-DIMMED/CONTINUOUS DIMMING CONTROLS SHALL NOT BE OPERATIONAL UNTIL THE LAMPS HAVE HAD AN OPPORTUNITY TO "BURN IN" - TYPICALLY A MINIMUM OF 10 HOURS - OR GREATER AS RECOMMENDED BY THE RESPECTIVE LAMP AND BALLAST MANUFACTURERS.

      3) AUTOMATIC SWITCHING/STEP-DIMMED CONTROL SETTINGS:

         CONTRACTOR TO UTILIZE THE PHOTOSENSOR AUTOMATIC CALIBRATION AND SETPOINT FUNCTIONS TO ESTABLISH THE OPTIMAL ON/OFF SETPOINTS, TIME DELAYS AND DEADBAND SETTINGS FOR EACH CONTROL ZONE INDICATED WITH DAYLIGHTING CONTROLS.

      4) AUTOMATIC CONTINUOUS DIMMING CONTROL SETTINGS SHALL BE SET USING AN ILLUMINANCE METER, AT A LOCATION FURTHEST FROM THE DAYLIGHT SOURCE, AS FOLLOWS:

         - NIGHT CONDITIONS/SETTING: SET AND ADJUST THE ILLUMINANCE LEVELS TO BE PER THE "TARGET ILLUMINATION" SYMBOL VALUE - SEE DLCS SOO/ZONE SCHEDULE. THE VALUE MUST BE AT OR BELOW THE "TARGET ILLUMINATION" SYMBOL VALUE.

         - DAY CONDITIONS/SETTING: WITH WINDOW COVERINGS IN THE "OPEN" POSITION AND THE DAYLIGHT CONTRIBUTION (LIGHTS OFF) AT A MAXIMUM OF 75% OF THE "TARGET ILLUMINATION" SYMBOL VALUE, SET AND ADJUST THE COMBINED ARTIFICIAL ILLUMINATION AND DAYLIGHTING ILLUMINATION TO MEET THE SYMBOL VALUE AT THE SAME LOCATION/POSITION OF THE NIGHT SETTINGS.

         - RAMP UP/DOWN RATES/CUT-OFF TIME DELAY.

   e. IT IS THE CONTRACTOR'S RESPONSIBILITY TO ARRANGE A PRE-INSTALLATION MEETING WITH THE MANUFACTURER'S FACTORY AUTHORIZED REPRESENTATIVE, AT THE PROJECT, TO VERIFY PLACEMENT OF SENSORS AND INSTALLATION CRITERIA.

   f. PROPER JUDGMENT MUST BE EXERCISED IN EXECUTING THE INSTALLATION SO AS TO ENSURE THE BEST POSSIBLE INSTALLATION IN THE AVAILABLE SPACE AND TO OVERCOME LOCAL DIFFICULTIES DUE TO SPACE LIMITATIONS OR INTERFERENCE OF BUILDING STRUCTURAL COMPONENTS.

   g. CONNECT ALL DEVICES AS REQUIRED. UNLESS PROHIBITED BY LOCAL CODE, CONNECTIONS SHALL BE MADE WIRELESSLY OR WITH PLENUM-RATED CABLING ROUTED NEATLY INTO AND ABOVE THE ACCESSIBLE CEILING. CABLES SHALL BE SUPPORTED WITH DEDICATED SUPPORT WIRES AND J-HOOKS. WHERE LOCAL CODE OR PROJECT SPECIFICATIONS REQUIRES LOW VOLTAGE CABLING TO BE ROUTED IN CONDUIT, INCLUDE ALL COSTS IN BASE BID TO PROVIDE APPROPRIATELY-SIZED SYSTEM OF CONDUITS AND JUNCTION BOXES TO ROUTE CONNECTION CABLING. J-BOXES/CONTROLLERS SHALL BE LOCATED ABOVE ACCESSIBLE CEILINGS AND NEVER IN HARD-LID CEILING AREAS. PRE-TERMINATED CABLING SHALL BE PROVIDED BY THE SYSTEM MANUFACTURER AND SHALL BE GREEN IN COLOR UNLESS IT IS ROUTED IN AN EXPOSED CEILING CONDITION WHERE IT SHALL BE BLACK, WHITE OR GRAY AS DIRECTED BY THE ARCHITECT.

   h. INSTALL LINE VOLTAGE CONDUCTORS, LOW VOLTAGE CONDUCTORS AND COMMUNICATIONS CABLING BETWEEN LIGHTING FIXTURES AND DLCS COMPONENTS PER THE DLCS MANUFACTURER'S RECOMMENDATIONS REGARDING CONDUCTOR ROUTING, CONDUCTOR SEPARATION AND CONDUCTOR TERMINATIONS. CONTRACTOR SHALL UTILIZE INSTALLATION MEANS AND METHODS THAT DO NOT COMPROMISE THE DLCS SYSTEM WARRANTY.

   i. WHERE CODE OR LOCAL AHJ REQUIREMENTS REQUIRE THE INSTALLATION OF ALL LOW-VOLTAGE CONDUCTORS TO BE INSTALLED IN CONDUIT - CONTRACTOR TO PROVIDE ALL REQUIRED MANUFACTURER SPECIFIC EQUIPMENT JUNCTION BOXES AND CONDUIT ADAPTERS AS REQUIRED.

   j. UNLESS PROHIBITED BY LOCAL CODE, ALL CONTROL UNITS SHALL BE PLENUM-RATED. WHERE CONTROL UNITS ARE LOCATED IN EXPOSED CEILING SPACES, INCLUDE ALL COSTS IN BASE BID TO PROVIDE APPROPRIATELY-SIZED VENTILATED CONTROL UNIT ENCLOSURES FOR CONCEALMENT. COLOR OF ENCLOSURE PER ARCHITECT.

SYMBOLS / REPRESENTATIVE GRAPHIC IMAGES

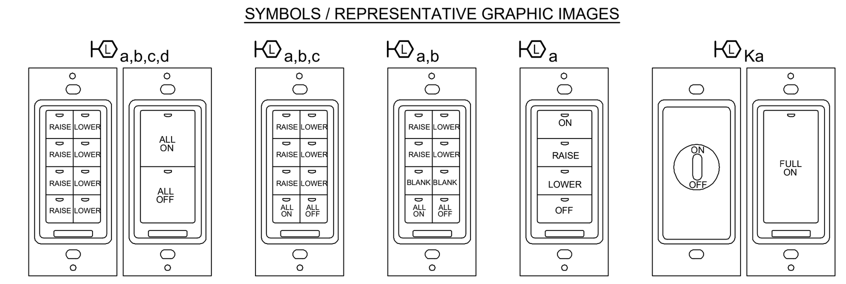

15. DLCS START-UP, BUILDING AUTOMATION SYSTEM (BAS) INTEGRATION, COMMISSIONING, & TRAINING

   a. PRIOR TO NETWORK SYSTEM FACTORY START-UP, THE CONTRACTOR SHALL 1) TEST ALL COMMUNICATIONS CABLING FOR SHORTS, POLARITY REVERSALS AND BAD TERMINATIONS/CONNECTIONS AND MAKE NECESSARY REPAIRS AND 2) DEMONSTRATE FULL CONNECTIVITY TO ALL NETWORK AND LOCAL (IN-ROOM) DEVICES VIA MS/TP CAPTURE OR OTHER VENDOR SPECIFIC TESTING PROCESS. CONTRACTOR SHALL PROVIDE A TEST REPORT OUTLINING TEST COMPLETION AND ANY REPAIRS MADE AND CERTIFY THAT NETWORK DEVICE AND LOCAL DEVICE CONNECTIVITY HAS BEEN ACHIEVED PRIOR TO SCHEDULED FACTORY START-UP. BASED ON PAST PROJECT EXPERIENCE, FAILURE TO PERFORM ANY OF THE ABOVE STEPS HAS RESULTED IN BOTH VERY INEFFICIENT FACTORY START-UP AND PROJECT DELIVERY DELAY. ANY ADDITIONAL COSTS ARISING OUT OF A FAILURE TO COMPLETE THIS TESTING SHALL BE BORNE SOLELY BY THE CONTRACTOR.

   b. NETWORK SYSTEMS SHALL BE INSPECTED, STARTED UP, CONFIGURED AND PROGRAMMED BY FACTORY START-UP TECHNICIANS TO MEET THE INTENDED INTEGRATION AND CONTROLS SCENARIOS AND FUNCTIONALITY DESIRED BY THE SYSTEM USER. EFFORT SHALL INCLUDE REQUESTING ANY END-USER SPECIFIC NETWORK ADDRESSING OR OTHER INSTRUCTIONS FOR THE DLCS TO RESIDE ON THE END-USER LAN. FOR PROJECTS WHERE THE END-USER DOES NOT WANT THE DLCS TO COMMUNICATE WITH THE END-USER LAN, CONTRACTOR SHALL PROVIDE AND CONFIGURE ALL DLCS NETWORK COMPONENTS AS REQUIRED FOR THE SYSTEM TO FUNCTION IN ISOLATION WITHOUT PERMANENT LAN OR INTERNET ACCESS.

   c. WHERE THE DLCS SCHEDULE INDICATES BAS INTEGRATION IS REQUIRED OR WHERE REQUIRED PER MECHANICAL & MECHANICAL CONTROLS DRAWINGS AND SPECIFICATIONS, THE CONTRACTOR'S DLCS FACTORY TECHNICIAN SHALL ASSIST THE BAS CONTRACTOR WITH DLCS POINT INTEGRATION. THE PRIMARY OBJECTIVE OF DLCS INTEGRATION WITH THE BAS IS TO ALLOW FOR OCCUPANCY-BASED HVAC SETBACK, TO ENABLE/CONTROL LIGHTING SCHEDULES AND TO INTEGRATE ZONE OR AREA OCCUPANCY LIGHTING STATUS INTO A BAS GRAPHICAL USER INTERFACE DISPLAY BASED ON ARCHITECTURAL FLOOR PLAN(S). SECONDARY OBJECTIVES INCLUDE; REMOTE TROUBLESHOOTING OF USER COMPLAINTS, INTEGRATION INTO FUTURE CONTINUOUS COMMISSIONING SYSTEMS ETC AND AS OUTLINED IN THE MECHANICAL CONTROLS DRAWINGS AND SPECIFICATIONS AND AS FOLLOWS:

      1) THE PRIMARY PROTOCOL FOR INTEGRATION SHALL BE BACNET PER ANSI/ASHRAE 135-2016 – OR LATEST PUBLISHED STANDARD.

      2) WHERE A DLCS NETWORK COMPONENT IS BTL (BACNET TESTING LAB)-LISTED, IT SHALL BE LABELED AS SUCH. WHERE A DLCS NETWORK COMPONENT IS FOUND TO CAUSE BACNET INTEGRATION ISSUES, THE DLCS MANUFACTURER SHALL BE RESPONSIBLE FOR ALL COSTS RELATED TO BOTH TROUBLESHOOTING THE ISSUE AND THE ULTIMATE RESOLUTION OF THE ISSUE TO INCLUDE COSTS ASSOCIATED WITH USE OF BACNET PROTOCOL ANALYZERS TO IDENTIFY THE PROBLEM UP TO AND INCLUDING LABOR, MATERIAL, EQUIPMENT, SOFTWARE CODING, FIRMWARE REVISIONS, AND RECOMMISSIONING ASSOCIATED WITH REPAIR, REPLACEMENT AND/OR ADDITIONAL COMPONENTS NEEDED TO CORRECT THE INTEGRATION ISSUE.

      3) THE DLCS NETWORK SHALL BROADCAST ANY OCCUPANCY SENSOR STATUS VIA CHANGE OF VALUE TO THE BAS IN LESS THAN 5 SECONDS. POLLING BY THE DLCS AS A METHOD OF OBTAINING OCCUPANCY SENSOR VALUES IS UNACCEPTABLE DUE TO EXCESSIVE LATENCY AND RESULTANT SLOW SYSTEM RESPONSE TIME.

      4) WHILE THE DLCS SHALL BE CAPABLE OF PROVIDING A MUCH LARGER VARIETY OF BACNET POINTS, THE FOLLOWING ARE REQUIRED FOR BASIC INTEGRATION AT A MINIMUM (SEE MECHANICAL DRAWINGS AND SPECIFICATIONS FOR SPECIFIC POINT INTEGRATION REQUIREMENTS):

         - INTERIOR DLCS POINTS
         -- ROOM OCCUPANCY STATE: REPORTS OCCUPIED VS UNOCCUPIED.
         -- INDIVIDUAL OCCUPANCY SENSOR STATE: REPORTS OCCUPIED VS UNOCCUPIED AREA(S).
         -- LOAD/RELAY STATE: REPORTS LIGHT FIXTURE ON /OFF STATUS.
         -- LOAD DIMMING LEVEL: REPORTS AUTOMATIC OR MANUAL DIMMING STATUS.
         -- DAYLIGHT SENSOR INHIBITING: REPORTS DAY LIGHT SENSOR HOLDING LIGHTS AT A DIMMED LEVEL.
         -- ROOM SCHEDULE STATE: REPORTS NORMAL VS AFTER HOURS SCHEDULE MODE.

         - EXTERIOR DLCS POINTS
         -- RELAY PANEL SCHEDULE STATE: REPORTS NORMAL VS AFTER HOURS SCHEDULE MODE.
         -- INDIVIDUAL RELAY STATE: REPORTS LIGHT FIXTURE ZONE ON /OFF STATUS.

      5) A PROJECT-SPECIFIC BACNET OBJECT NAMING PROTOCOL SHALL BE DEVELOPED AND PROVIDED BY THE MECHANICAL CONTROLS/BAS CONTRACTOR TO BE USED BY THE DLCS CONTRACTOR IN NAMING DLCS BACNET OBJECTS INTEGRATED INTO THE BAS. CONFIRM DLCS ADDRESSING/OBJECT NAMING SCHEME WITH MECHANICAL CONTROLS/BAS CONTRACTOR PRIOR TO IMPLEMENTING IN ORDER TO REDUCE INTEGRATION CONFLICTS.

      6) ALL OF THE ABOVE POINTS, USING THE OBJECT NAMING SCHEME PROVIDED BY THE MECHANICAL CONTROLS/BAS CONTRACTOR, SHALL BE PROVIDED TO THE BAS CONTRACTOR IN AN ELECTRONIC TABLE FORMAT TO INCLUDE; BACNET OBJECT NAME, OBJECT SERIAL NUMBER, ROOM NAME AND NUMBER FOR EACH DEVICE ON THE PROJECT. FOR RELAY PANEL-BASED OBJECTS, PROVIDE ROOM NAMES OR EXTERIOR LIGHTING ZONE NAMES AS APPROPRIATE. PROVIDE BUILDING NUMBER FOR EACH DEVICE WHERE THE PROJECT CONSISTS OF MORE THAN ONE BUILDING. SEE MECHANICAL CONTROLS DRAWINGS AND SPECIFICATIONS FOR ADDITIONAL FORMATTING REQUIREMENTS.

      7) IN ADDITION TO A POINTS LIST TABLE, PROVIDE A SHOP DRAWING DEPICTING; THE LOCATION OF EACH OCCUPANCY AND DAYLIGHT SENSOR AND EACH SENSOR OBJECT NAME. WHERE RELAY PANELS ARE PROVIDED, ALSO INDICATE EACH INTERIOR AND EXTERIOR RELAY PANEL ZONE CONTROL AREA.

      8) INCLUDE SUFFICIENT MEETING AND COORDINATION EFFORT WITH THE BAS AND MECHANICAL CONTRACTORS TO REVIEW THE ABOVE INFORMATION. WHERE OCCUPANCY SENSOR ZONES DO NOT CORRESPOND TO HVAC VARIABLE AIR VOLUME (VAV) ZONES, EC/DLCS VENDOR SHALL ASSIST THE BAS AND MECHANICAL CONTRACTORS IN RESOLVING THE CONFLICT THROUGH TROUBLESHOOTING DEVICE/OBJECT NAMING SCHEMES.

   d. UPON COMPLETION OF THE INSTALLATION, THE SYSTEM SHALL BE COMPLETELY COMMISSIONED BY THE MANUFACTURER'S FACTORY AUTHORIZED TECHNICIAN WHO WILL VERIFY ALL ADJUSTMENTS AND SENSOR PLACEMENT TO ENSURE A TROUBLE-FREE INSTALLATION. THIS COMMISSIONING EFFORT SHALL BE PERFORMED IN A MANNER THAT MEETS ALL APPLICABLE FEDERAL, STATE, LOCAL ENERGY CODES AND/OR LEED CERTIFICATION PROGRAMS. THE CONTRACTOR SHALL BE RESPONSIBLE FOR FILLING OUT ALL APPLICABLE PAPERWORK AND/OR FORMS. CONTRACTOR TO PROVIDE A COPY OF THE COMPLETED FORMS TO THE ENGINEER OF RECORD PRIOR TO THE PUNCH LIST SITE VISIT FOR REVIEW AND POSSIBLE RECOMMENDATION OF SETTING REVISIONS.

      CONTRACTOR SHALL INCLUDE ALL COST IN THE BASE BID AND PROVIDE THE FOLLOWING WORK FOR EVERY CONTROL ZONE:

      - INITIAL SETTINGS AS INDICATED ON SOO/ZONE SCHEDULE.

      - COMMISSIONING OF EACH LIGHTING CONTROL DEVICE/ZONE PER NOTES BELOW.

      - A FOLLOW UP SETTING(S) ADJUSTMENT, AS DICTATED BY THE ELECTRICAL ENGINEER, BASED UPON A REVIEW OF THE RESULTS OF THE CONTRACTOR'S COMMISSIONING EFFORT AND FINAL PUNCH LIST.

   e. REGARDLESS OF THE LESSER REQUIREMENTS OF ANY AHJ COMMISSIONING FORMS, THE FOLLOWING MINIMUM COMMISSIONING ITEMS MUST BE COMPLETED FOR EACH DEVICE/LIGHTING CONTROL ZONE:

      - MEASURED LIGHTING POWER (KW) AT THE FULLY DIMMED CONDITION.

      - MEASURED LIGHTING POWER (KW) AT FULL LIGHT OUTPUT.

      - ONLY LIGHTING FIXTURES IN THE DAYLIGHTING ZONE ARE AFFECTED BY THE DAYLIGHTING CONTROLS.

      - LIGHTING POWER IS REDUCED BY AT LEAST 50% IN WINDOW DAYLIT AREAS AND 65% IN SKYLIGHT DAYLIT AREAS.

      - DEMAND RESPONSE TESTING, RECORDING, PRE-TEST, "OCCUPIED" STEADY-STATE LIGHTING POWER (KW) & SIMULATED DEMAND RESPONSE LIGHTING POWER (KW) DEMONSTRATING AN OVERALL 10% ENERGY REDUCTION.

      - DIMMING SYSTEMS PROVIDE FLICKER FREE OPERATION.

      - ILLUMINATION LEVELS, LOCATIONS OF MEASUREMENTS, SPECIFIC DEVICE SETTINGS ARE DOCUMENTED ON AS-BUILTS.

   f. AS PART OF THE "RECORD DRAWINGS", INDICATE ON THE REFLECTED CEILING PLAN THE EXACT LOCATION (CEILING TILE OR ACCESS PANEL) OF ANY ABOVE CEILING DEVICE.

   g. WHEN THE PROJECT REQUIRES TWENTY-FIVE (25) OR MORE CEILING MOUNTED SENSORS, CONTRACTOR TO PROVIDE A REMOTE CONTROL PROGRAMMING/CONTROL DEVICE, AND HAND IT TO THE OWNER AT THE END OF THE PROJECT.

   h. THE CONTRACTOR TO INCLUDE ALL COSTS TO ENSURE THAT PROGRAMMING IS PERFORMED BY A FACTORY PERSON OR AUTHORIZED TECHNICIAN. FACTORY TECHNICIAN TO ALSO PROVIDE USER/OWNER TRAINING AT TURNOVER OF BUILDING WITH A SECOND TRAINING 60 TO 90 DAYS AFTER OCCUPANCY. TRAINING TO INCLUDE SYSTEM OVERVIEW, TRAINING ON SYSTEM SOFTWARE, PREVENTATIVE MAINTENANCE, SERVICE AND SUPPORT INFORMATION THAT IS DEEMED NECESSARY TO FAMILIARIZE THE OWNER'S PERSONNEL WITH THE OPERATION, USE, MAINTENANCE, ADJUSTMENT, AND PROBLEM SOLVING DIAGNOSIS OF THE OCCUPANCY SENSING DEVICES AND LIGHTING CONTROL SYSTEMS.

Copyright © 2025

All ideas, designs, arrangements and plans indicated or represented by this drawing are owned by, and the property of, NICHOLS, MELBURG and ROSSETTO and were created, evolved and developed for use on, and in conjunction with, the specified project. None of such ideas, designs, arrangements or plans shall be used by, or disclosed to any person, firm or corporation for any purpose whatsoever without the written permission of NICHOLS, MELBURG and ROSSETTO.

NICHOLS MELBURG & ROSSETTO
ARCHITECTS + ENGINEERS
300 KNOLLCREST DRIVE
REDDING, CA. 96002
(530) 222-3300 (530) 222-3538 FAX
http://www.nmrdesign.com

CONSULTANTS

tk1sc
Member of WSP
11870 Pierce Street, Suite 160
Riverside, California 92505
951.299.4160 www.tk1sc.com

Project Leader - Jerry Leonhardt
Electrical Lead - Jerry Leonhardt
WSP Job #: B2305166.000

LICENSE STAMPS

REGISTERED PROFESSIONAL ENGINEER
RAYMOND W. SWARTZ
No. E15610
Ex. 12/31/2025
ELECTRICAL
STATE OF CALIFORNIA

PROJECT NAME

TEHAMA COUNTY CORNING VETERAN'S HALL

1620 SOLANO ST.
CORNING, CA

SHEET TITLE

DISTRIBUTED LIGHTING CONTROL SPECIFICATIONS

DRAWING STATUS

CONSTRUCTION DOCUMENTS

REVISIONS

Sym.	Description	Date

Drawn By	
Date Issued	2/13/2025
Scale	-
Project No.	21-6497

SHEET No.

E4.3

Login Name: USGL700366
Plot Date: February 13, 2025 - 9:34 am
File Name: P:\2023\B2305166.000 Corning Veterans Hall Remod\Drawings and Models\CAD\Electrical\E4-3.dwg
XREFS: x-CVH_Title Block

AREA TYPE	OCC SENSOR					INTERIOR DAYLIGHT SENSOR			EXTERIOR PHOTOCELL		ASTRONOMICAL TIME CLOCK CONTROLS			LOCAL CONTROL			SYSTEM		NOTES	REMARKS
ALL VALUES ARE BASED ON CALIFORNIA TITLE 24 2022 LIGHTING CONTROLFOR NON-RESIDENTIAL BUILDINGS	AUTO ON WHEN OCCUPANCY DETECTED (PERCENTAGE OF NOMINAL FC)	MANUAL ON (WHEN SWITCH / BUTTON IS PRESSED)	PRIMARY OCCUPANCY SENSOR ZONE REDUCED OUTPUT OR OFF	REDUCED OUTPUT OR OFF DURING NORMAL HOURS	REDUCED OUTPUT OR OFF AFTER NORMAL HOURS	AUTO OFF AT TARGET FC FIXTURES DIM TO OFF	AUTO DIM AT TARGET FC FIXTURES REMAIN ON AT LOWEST LEVEL	TARGET ILLUMINATION LEVEL NOMINAL FOOTCANDLE & METER HEIGHT	EXTERIOR PHOTOCELL ON	EXTERIOR PHOTOCELL OFF	BEGIN NORMAL OPERATING HOURS (ASTRONOMICAL TIME CLOCK TURN ON)	END NORMAL OPERATING HOURS (ASTRONOMICAL TIME CLOCK TURN OFF)	AFTER NORMAL HOURS OVERRIDE CANNOT EXCEED 2 HOURS PER §130.1(c)3.B	ON / OFF	ON / OFF / RAISE / LOWER DIMMING	SCENE SELECTOR SCENE REQUIREMENTS: (1) SCENE GEN. LTG ONLY - NO DECORATIVE (1) SCENE ALL OFF OR "CLOSED"	PLUG LOAD CONTROL MUST BE CAPABLE OF TURNING OFF IN RESPONSE TO DEMAND RESPONSE SIGNAL	DEMAND RESPONSE LIGHTING REDUCTION FOR SYSTEMS HAVING >4,000W LIGHTING POWER REFER TO TITLE 24 DOCUMENTATION TO CONFIRM IF REQ'D	PROGRAMMING NOTES PLEASE SEE BELOW	PLEASE REFER TO SPECIFICATIONS FOR ADDITIONAL INFORMATION. O = INDICATES OPTIONAL COMPLIANCE, NOT REQ'D. ● = INDICATES REQUIRED COMPLIANCE ALL LIGHTING WITHIN DAYLIGHTING ZONES SHALL BE COMMISSIONED AT NIGHT, WITH NO DAYLIGHT CONTRIBUTION, IN ORDER TO ESTABLISH BASELINE ILLUMINATION LEVELS. "NORMAL HOURS" REFERS TO OWNER-DETERMINED OPERATING HOURS. "AFTER HOURS" REFERS TO ANY TIME PERIOD BEFORE OR AFTER OWNER-DETERMINED OPERATING HOURS. WHERE EXTERIOR PHOTOCELL CONTROL IS INDICATED, PLEASE PROVIDE EXTERIOR NORTH FACING DAYLIGHT SENSOR.
ATRIA	-	-	-	-	-	-	●	10 FC AT FLOOR	-	-	6:00	21:00	●	-	-	●	-	●	J	ALL LIGHTING TRANSITIONS DURING OPERATING HOURS SHALL BE MINIMUM 5-MINUTE FADE TIMES. §130.1(a)2 EXCEPTION 1 - MANUAL CONTROL MAY BE SECURED, OR LOCATED IN ANOTHER LOCATION WITH VISUAL INDICATION OF LIGHTING STATUS.
CLOSET	ON AT 100%	ON AT 100%	OFF AFTER 5 MIN.	-	-	-	-	-	-	-	-	-	-	●	-	-	-	-	-	§130.1(b) EXCEPTION 1 - AN AREA ENCLOSED BY CEILING HEIGHT PARTITIONS THAT HAS ONLY ONE LUMINAIRE WITH NO MORE THAN TWO LAMP DOES NOT REQUIRE MULTI-LEVEL CONTROLS.
CONFERENCE ROOM / MEETING / HUDDLE ROOM	ON AT 70%	ON AT 100%	OFF AFTER 5 MIN.	-	-	-	●	40-50 FC +0" AFF	-	-	-	-	-	-	●	○	●	●	A,C,D,F	
COPY ROOM	ON AT 100%	ON AT 100%	OFF AFTER 5 MIN.	-	-	●	-	30 FC +3'6" AFF	-	-	-	-	-	-	●	-	●	●	A,B,F	
CORRIDOR	ON AT 100%	-	-	DIM 50% AFTER 5 MIN.	OFF AFTER 5 MIN.	-	●	5-10 FC +0" AFF	-	-	06:00	18:00	●	-	●	-	-	●	A,B,C,J,M	§130.1(a)1 EXCEPTION 1 - MANUAL CONTROL MAY BE LOCATED IN A SEPARATE, SECURED LOCATION. PROVIDE DUAL MODE CONTROL PER DLCS SPECIFICATIONS.
ELECTRICAL ROOM, MECHANICAL ROOM, TELECOMMUNICATIONS ROOM	-	-	-	-	-	-	-	'10 FC +5' AFF	-	-	-	-	-	●	-	-	-	-	-	LOCAL TOGGLE SWITCH ONLY
KITCHEN	ON AT 80%	ON AT 100%	OFF AFTER 20 MIN.	-	-	-	●	10-30 FC +30" AFF	-	-	-	-	●	-	●	-	-	●	-	
LOBBY COMMERCIAL TENANT	ON AT 100%	ON AT 100%	-	DIM 50% AFTER 20 MIN	OFF AFTER 20 MIN	-	●	10 FC +0" AFF	-	-	06:00	21:00	●	-	●	○	●	●	A,B,C,D,J, M	ALL LIGHTING TRANSITIONS DURING OPERATING HOURS SHALL BE MINIMUM 5-MINUTE FADE TIMES. §130.1(a)2 EXCEPTION 1 - MANUAL CONTROL MAY BE SECURED, OR LOCATED IN ANOTHER LOCATION WITH VISUAL INDICATION OF LIGHTING STATUS.
LOBBY ELEVATOR THRESHOLD	-	-	-	-	-	-	●	10 FC MIN.	-	-	-	-	-	-	-	-	-	-	-	ASME A17.1 §2.11.10.2 -THE ILLUMINATION LEVEL AT THE SILL (THRESHOLD) OF AN ELEVATOR MUST BE 10 FC, WHEN THE ELEVATOR IS IN SERVICE.
OFFICE, LARGE >250 SQ FT	ON AT 70%	ON AT 100%	OFF OR 20% AFTER 20 MIN.			'○	●	40-50 FC +30" AFF	-	-	-	-	-		●	○	●	●	A,B,D,F	§130.1(c) 6 - OCCUPANCY CONTROL ZONE SHALL NOT EXCEED 600 SQ/FT PER SENSOR. UNDERCABINET AND FURNITURE MOUNT TASK LIGHTING EXEMPT. WHEN A SINGLE OCC SENSOR ZONE IS OCCUPIED, ALL ADJACENT ZONES REMAIN AT 20%. WHEN ALL ZONES ARE VACANT, 20 MIN. DELAY TO OFF.
OFFICE, SMALL ≤250 SQ FT	ON AT 70%	ON AT 100%	OFF AFTER 20 MIN.			'○	●	40-50 FC +30" AFF	-	-	-	-	-		●	○	●	●	A,B,D,F	
OPEN OFFICE / OFFICE KITCHEN AREA / LOUNGE / BREAK ROOM / WORKROOM	ON AT 80%	ON AT 100%	OFF OR 20% AFTER 20 MIN.			'○	●	40-50 FC +30" AFF	-	-	-	-	-		●	○	●	●	A,B,D,F	§130.1(c) 6 - OCCUPANCY CONTROL ZONE SHALL NOT EXCEED 600 SQ/FT PER SENSOR. UNDERCABINET AND FURNITURE MOUNT TASK LIGHTING EXEMPT. WHEN A SINGLE OCC SENSOR ZONE IS OCCUPIED, ALL ADJACENT ZONES REMAIN AT 20%. WHEN ALL ZONES ARE VACANT, 20 MIN. DELAY TO OFF.
RESTROOMS (2) OR MORE STALLS	ON AT 100%	-	5 MIN. TO OFF	-	-	-	-	20 FC +15"	-	-	-	-	-	●	-	-	-	-	-	§130.1(b) EXCEPTION 2 - DIMMABLE LUMINAIRES NOT REQUIRED. §130.1(c)5 - [DUAL MODE] OCCUPANCY SENSORS REQUIRED. §130.1(a)1 EXCEPTION 1 - MANUAL CONTROL MAY BE LOCATED IN A SEPARATE, SECURED LOCATION.
RESTROOMS (1) STALL	ON AT 100%	-	5 MIN. TO OFF	-	-	-	-	20 FC +15"	-	-	-	-	-	●	-	-	-	-	-	§130.1(b) EXCEPTION 2 - DIMMABLE LUMINAIRES NOT REQUIRED. §130.1(c)5 - OCCUPANCY SENSORS REQUIRED. §130.1(a) - PROVIDE MANUAL AREA CONTROL IN RESTROOM.
STAIRWELL, INTERIOR ENCLOSED	ON AT 100%	-	50% AFTER 10 MIN	-	-	-	-	10 FC +0" AFF	-	-	-	-	-	●	-	-	-	-	-	§130.1(a)1 EXCEPTION 1 - MANUAL CONTROL MAY BE LOCATED IN A SEPARATE, SECURED LOCATION.
STAIRWELL, EXTERIOR	-	-	-	-	-	-	-	10 FC +0" AFF	ON 100% AT DUSK	OFF AT DAWN	ON 100% AT DUSK	OFF AT DAWN	-	●	-	-	-	-	-	§130.1(a)1 EXCEPTION 1 - MANUAL CONTROL MAY BE LOCATED IN A SEPARATE, SECURED LOCATION. §130.2(C)3 EXCEPTION 2 - APLLICATIONS LISTED AS EXEMPTIONS FROM SECTION 140.7 [INCLUDING EXTERIOR STAIRS] ARE NOT REQUIRED TO HAVE MOTION SENSING CONTROLS. CHOOSE CONTROL: LIGHTING MAY BE CONTROLLED FROM TIME CLOCK, EXTERIOR PHOTOCELL OR BOTH.
EXTERIOR LIGHTING, TIMECLOCK / PHOTOCELL CONTROL																				
ATM (EXTERIOR)	-	-	-	-	-	-	-	-	ON 100% AT DUSK	OFF AT DAWN	ON 100% AT DUSK	OFF AT DAWN	-	-	-	-	-	-	-	CA FINANCIAL CODE DIV. 4, CHAPTER 4, §13041 10 FC AT FACE OF ATM TO 5 FEET OUT, 2 FC TO 50 FEET OUT; 60 FEET IF THE PARKING AREA IS DEFINED FOR ATM USE. IT ATM LOCATED WITHIN 10FT OF CORNER OF BUILDING, 2 FC EXTENDS 40 FT ALONG SIDE OF BUILDING.
EXTERIOR LIGHTING >24 FT TALLER THAN 24 FT	-	-	-	-	-	-	-	-	●	-	PERIOD 1: ON 100% AT DUSK - PERIOD 2: DIM 80% AT 24:00	OFF AT DAWN	●	-	-	-	-	-	J, L, M	§130.2(c) LIGHTS SHALL BE OFF DURING DAYTIME; LIGHTS SHALL BE AUTOMATICALL CONTROLLED BY TIME-BASED SCHEDULING CONTROLS. §130.2(c)2B - AUTOMATIC SCHEDULING CONTROLS SHALL ALLOW SCHEDULING OF MIN. OF TWO NIGHTTIME PERIODS WITH INDEPENDENT LIGHTING LEVELS.... OCCUPANCY SENSOR NOT REQUIRED
EXTERIOR LIGHTING ≥24 FT & <40W 24 FT OR SHORTER 40W OR LESS	-	-	-	-	-	-	-	-	●	●	PERIOD 1: ON 100% AT DUSK - PERIOD 2: DIM 50% AT 24:00	OFF AT DAWN	●	-	-	-	-	-	J,L,M	§130.2(c) LIGHTS SHALL BE OFF DURING DAYTIME; LIGHTS SHALL BE AUTOMATICALL CONTROLLED BY TIME-BASED SCHEDULING CONTROLS. §130.2(c)2B - AUTOMATIC SCHEDULING CONTROLS SHALL ALLOW SCHEDULING OF MIN. OF TWO NIGHTTIME PERIODS WITH INDEPENDENT LIGHTING LEVELS.... §130.2(c)3 - LUMINAIRES WITH A MAXIMUM RATED WATTAGE OF 40W EACH ARE NOT REQUIRED TO HAVE MOTION SENSING CONTROLS.
EXTERIOR FAÇADE & OUTDOOR DINING	-	-	-	-	-	-	-	-	●	●	PERIOD 1: ON 100% AT DUSK - PERIOD 2: DIM 50% AT 02:30	OFF AT DAWN	●	-	-	-	-	-	J,L,M	§130.2(C) LIGHTS SHALL BE OFF DURING DAYTIME; LIGHTS SHALL BE AUTOMATICALLY CONTROLLED BY TIME-BASED SCHEDULING CONTROLS. §130.2(c) 3 NO MORE THAN 1,500W OF LIGHTING CONTROLLED FROM A SINGLE SENSOR. §130.2(c)3Di - EXTERIOR FACADE & OUTDOOR DINIUNG ARE EXEMPT FROM MOTION SENSOR REQUIREMENT.
LANDSCAPE LIGHTING, ORNAMENTAL HARDSCAPE LIGHITNG	-	-	-	-	-	-	-	-	●	●	PERIOD 1: ON 100% AT DUSK - PERIOD 2: DIM 50% AT 24:00	OFF AT DAWN	-	-	-	-	-	-	J,M	§130.2(C) LIGHTS SHALL BE OFF DURING DAYTIME; LIGHTS SHALL BE AUTOMATICALLY CONTROLLED BY TIME-BASED SCHEDULING CONTROLS. §130.2(c) 3 NO MORE THAN 1,500W OF LIGHTING CONTROLLED FROM A SINGLE SENSOR. §130.2(c)3 - LUMINAIRES WITH A MAXIMUM RATED WATTAGE OF 40W EACH ARE NOT REQUIRED TO HAVE MOTION SENSING CONTROLS.

PROGRAMMING NOTES

NOTES: A. PROVIDE DAYLIGHTING CONTROL FOR PRIMARY AND SECONDARY DAYLIT OR SKYLIT ZONES WERE REQUIRED. DAYLIGHTING IS NOT NECESSARY WHEN AREAS DO NOT INCLUDE SKYLIGHTS OR GLAZING < 24 SQ FT OR SKYLIT+PRIMARY SIDELIT ZONE IS LESS THAN 120W. LUMINAIRES IN OR AT LEAST 50% WITHIN DAYLIGHTING ZONES MUST BE CONTROLLED.

B. CONTROLLED BY OCCUPANCY SENSOR: AUTO AND / OR MANUAL ON UNLESS OVERRIDDEN BY DAYLIGHTING SENSORS.
C. MANUAL CONTROL WALL STATIONS FOR THESE AREAS SHALL BE LOCATED IN THE NEAREST BACK OF HOUSE CLOSET, CONTROL BOOTH, ELECTRICAL ROOM, ETC. TO PREVENT UNAUTHORIZED USERS FROM ADJUSTING LIGHTING LEVELS.

D. CONFIGURE LIGHTING CONTROL TO PROVIDE PROPORTIONATE RAISE / LOWER OF ALL ROOM LIGHTING TOGETHER, REGARDLESS OF LOCATION IN DAYLIGHTING AND NON-DAYLIGHTING ZONES WHERE THEY OCCUR.
E. PROVIDE RS-232 OR ETHERNET CONNECTION TO AV SYSTEM TO ALLOW RECALL OF LIGHTING PRESETS BY AV SYSTEM WITHIN THIS ROOM, IF REQUESTED BY OWNER.
F. PROVIDE CONTROLLED RECEPTACLES IN THIS ROOM AS REQUIRED. CONTROLLED RECEPTACLE MUST BE WITHIN 6'-0" OF UNCONTROLLED RECEPTACLE.
G. PROVIDE AUTOMATIC TRANSFER RELAY, BRANCH CIRCUIT ELTS OR OTHER APPROVED METHOD WITH FACP INPUT TO FORCE LIGHTS ON TO FULL DURING LOSS OF NORMAL POWER OR DURING A FIRE ALARM EVENT. UNLESS SPECIFIED WITH A MANUAL EMERGENCY CONDITION RELEASE, LIGHTING SHALL RESTORE TO NORMAL OPERATION WHEN POWER IS RESTORED OR ALARM CONDITION IS CLEARED.

H. LIGHTING IN THIS SPACE MAY BE CONTROLLED FROM A STAGE LIGHTING SYSTEM. THE STAGE LIGHTING SYSTEM SHALL BE PROVIDED WITH A TITLE 24 COMPLIANT LIGHTING CONTROL PROCESSOR AND COMPATIBLE OCCUPANCY AND DAYLIGHT SENSORS AS REQUIRED FOR COMPLIANCE.
I. NOT USED
J. CONFIRM OPERATING HOURS WITH OWNER PRIOR TO FINAL PROGRAMMING.
K. REQUIRES CONNECTION TO BUILDING AUTOMATION SYSTEM (BAS) WHEN SUCH SYSTEM IS PRESENT.
L. FIXTURES WITHOUT OCCUPANCY SENSORS SHALL HAVE LOW END TRIM ADJUSTED TO MAINTAIN MINIMUM ILLUMINATION LEVELS.
M. LIGHTING CONTROL SYSTEM SHALL HAVE ASTRONOMICAL TIME CLOCK AND DUAL MODE CAPABILITY FOR "AFTER HOURS" CONTROL OF LIGHTING.
N. PERFORMANCE SPACE, NO DAYLIGHTING REQUIRED. TARGET ILLUMINATION LISTED ONLY FOR REFERENCE IN THIS COLUMN.

Copyright © 2025
All ideas, designs, arrangements and plans indicated or represented by this drawing are owned by, and the property of, NICHOLS, MELBURG and ROSSETTO and were created, evolved and developed for use on, and in conjunction with, the specified project. None of such ideas, designs, arrangements or plans shall be used by, or disclosed to any person, firm or corporation for any purpose whatsoever without the written permission of NICHOLS, MELBURG and ROSSETTO.

NICHOLS MELBURG & ROSSETTO
ARCHITECTS + ENGINEERS
300 KNOLLCREST DRIVE
REDDING, CA. 96002
(530) 222-3300 (530) 222-3538 FAX
http://www.nmrdesign.com

CONSULTANTS

tk1sc
Member of WSP
11870 Pierce Street, Suite 160
Riverside, California 92505
951.299.4160 www.tk1sc.com
Project Leader - Jerry Leonhardt
Electrical Lead - Jerry Leonhardt
WSP Job #: B2305166.000

LICENSE STAMPS

REGISTERED PROFESSIONAL ENGINEER
RAYMOND W. SWARTZ
No. E15610
Ex. 12/31/2025
ELECTRICAL
STATE OF CALIFORNIA

PROJECT NAME

TEHAMA COUNTY CORNING VETERAN'S HALL

1620 SOLANO ST.
CORNING, CA

SHEET TITLE

SEQUENCE OF OPERATIONS

DRAWING STATUS

CONSTRUCTION DOCUMENTS

REVISIONS

Sym.	Description	Date

Drawn By	
Date Issued	2/13/2025
Scale	-
Project No.	21-6497

SHEET No.

E4.4

Login Name: USGL700366
Plot Date: February 13, 2025 - 9:34 am
File Name: P:\2023\B2305166.000 Corning Veterans Hall Remod\Drawings and Models\CAD\Electrical\E4-4.dwg
XREFS: x-CVH_Title Block

STATE OF CALIFORNIA
Indoor Lighting
CALIFORNIA ENERGY COMMISSION

CERTIFICATE OF COMPLIANCE		NRCC-LTI-E
Project Name: Tehama County Corning Veteran's Hall	Report Page:	(Page 5 of 8)
	Date Prepared:	10/9/2024

I. LIGHTING POWER ALLOWANCE: COMPLETE BUILDING OR AREA CATEGORY METHODS

Area Description	Complete Building or Area Category Primary Function Area	Allowed Density (W/ft²)	Area (ft²)	Allowed Wattage (Watts)	Additional Allowance / Adjustment	
					Area Category	PAF
STORAGE	All Other Space Types	0.4	1,264	505.6	No	No
ASSEMBLY	Auditorium	0.7	4,686	3,280.2	No	No
CONFERENCE	Convention, Conference, Multipurpose and Meeting Center	0.75	1,158	868.5	No	No
HALLWAY	Corridor	0.4	202	80.8	No	No
KITCHEN	Kitchen/ Food Preparation	0.95	562	533.9	No	No
LOBBY	Main Entry Lobby	0.7	838	586.6	No	No
OFFICE < 250 SQ/FT	Office (<=250 square feet)	0.65	25	16.2	No	No
OFFICE > 250 SQ/FT	Office (>250 square feet)	0.6	271	162.6	No	No
RESTROOM	Restroom	0.65	432	280.8	No	No
STORAGE	All Other Space Types	0.4	488	195.2	No	No
STORAGE	All Other Space Types	0.4	1,433	573.2	No	No
MECHICAL ROOM	Electrical Mechancial Telephone Room	0.4	280	112	No	No
		TOTALS:	11,639	7,195.6	See Tables J, or P for detail	

J. ADDITIONAL ALLOWANCE: AREA CATEGORY METHOD QUALIFYING LIGHTING SYSTEM
This section does not apply to this project.

K. TAILORED METHOD GENERAL LIGHTING POWER ALLOWANCE
This section does not apply to this project.

L. ADDITIONAL LIGHTING ALLOWANCE: TAILORED WALL DISPLAY
This section does not apply to this project.

STATE OF CALIFORNIA
Indoor Lighting
CALIFORNIA ENERGY COMMISSION

CERTIFICATE OF COMPLIANCE		NRCC-LTI-E
Project Name: Tehama County Corning Veteran's Hall	Report Page:	(Page 3 of 8)
	Date Prepared:	10/9/2024

F. INDOOR LIGHTING FIXTURE SCHEDULE
This table includes all planned permanent and portable lighting other than dwelling unit/ hotel/ motel room lighting. Multifamily dwelling unit and hotel/motel room lighting is documented in Table T. If using Table T to document lighting in multifamily common use areas providing shared provisions for living, eating, cooking or sanitation, those luminaires are not included here.

Designed Wattage: Conditioned Spaces

01	02	03	04	05	06	07	08	09	10	
Name or Item Tag	Complete Luminaire Description	Modular (Track) Fixture	Small Aperture & Color Change[1]	Watts per luminaire[2]	How is Wattage determined	Total Number of Luminaires	Excluded per 140.6(a)3 / 170.2(e)2C	Design Watts	Field Inspector	
									Pass	Fail
1	1 - 2'X4' LED TROFFER	No	NA	31.2	Mfr. Spec	49	No	1,528.8	☐	☐
10	10 - 1'X4' SURFACE MOUNT LED	No	NA	30	Mfr. Spec	6	No	180	☐	☐
11	11 - EXISTING WALL SCONCE	No	NA	14	Mfr. Spec	8	No	112	☐	☐
3	3 - 4' LED STRIPLIGHT	No	NA	16	Mfr. Spec	9	No	144	☐	☐
4	4 - 8' LED STRIPLIGHT	No	NA	50	Mfr. Spec	12	No	600	☐	☐
5	5 - 6" LED RECESSED DOWNLIGHT	No	NA	14.5	Mfr. Spec	28	No	406	☐	☐
6	6 - 6" LED RECESSED DOWNLIGHT	No	NA	46	Mfr. Spec	72	No	3,312	☐	☐
7	7 - 2" LED LINEAR RECESSED PER/FT	No	NA	6.8	Mfr. Spec	24	No	163.2	☐	☐
8	8 - 2" LED PENDANT	No	NA	27	Mfr. Spec	1	No	27	☐	☐
9	9 - EXISTING LED DECORATIVE PENDANT	No	NA	50	Mfr. Spec	6	No	300	☐	☐
S3	S3 -TWIN FLOODLIGHT LED	No	NA	23.6	Mfr. Spec	2	No	47.2	☐	☐
							Total Designed Watts: CONDITIONED SPACES	6,820		

[1]FOOTNOTE: Design Watts for small aperture and color changing luminaires which qualify per 140.6(a)4B / 170.2(e)2D is adjusted to be 75% /80% of their rated wattage. Table F automatically makes this adjustment, the permit applicant should enter full rated wattage in column 05.

[2]Authority Having Jurisdiction may ask for Luminaire cut sheets to confirm wattage used for compliance per 130.0(c) / 160.5(b). Wattage used must be the maximum rated for the luminaire, not the lamp.

STATE OF CALIFORNIA
Indoor Lighting
CALIFORNIA ENERGY COMMISSION

CERTIFICATE OF COMPLIANCE		NRCC-LTI-E
Project Name: Tehama County Corning Veteran's Hall	Report Page:	(Page 1 of 8)
Project Address: 1620 Solano Street	Date Prepared:	10/9/2024

This document is used to demonstrate compliance with requirements in 110.9, 110.12(c), 130.0, 130.1, 140.6 and 141.0(b)2 for indoor lighting scopes using the prescriptive path for nonresidential and hotel/motel occupancies. It is also used to document compliance with requirements in 160.5, 170.2(e) and 180.2(b)4 for indoor lighting scopes using the prescriptive path for multifamily occupancies. Multifamily includes dormitory and senior living facilities.

A. GENERAL INFORMATION

01	Project Location (city)	Corning	04 Total Conditioned Floor Area (ft²)	11,639
02	Climate Zone	11	05 Total Unconditioned Floor Area (ft²)	0
03	Occupancy Types Within Project (select all that apply):		06 # of Stories (Habitable Above Grade)	1

● Auditorium ● Office ● Support Areas ● All Other Occupancies

B. PROJECT SCOPE
This table includes any lighting systems that are within the scope of the permit application and are demonstrating compliance using the prescriptive path outlined in 140.6 / 170.2(e) or 141.0(b)2 / 180.2(b)4 for alterations.

Scope of Work	Conditioned Spaces		Unconditioned Spaces	
01	02	03	04	05
My Project Consists of (check all that apply):	Calculation Method	Area (ft²)	Calculation Method	Area (ft²)
☒ New Lighting System	Area Category Method	11639	Area Category Method	0
☐ New Lighting System - Parking Garage				
Total Area of Work (ft²)	11639		0	

STATE OF CALIFORNIA
Indoor Lighting
CALIFORNIA ENERGY COMMISSION

CERTIFICATE OF COMPLIANCE		NRCC-LTI-E
Project Name: Tehama County Corning Veteran's Hall	Report Page:	(Page 6 of 8)
	Date Prepared:	10/9/2024

M. ADDITIONAL LIGHTING ALLOWANCE: TAILORED FLOOR AND TASK LIGHTING
This section does not apply to this project.

N. ADDITIONAL LIGHTING ALLOWANCE: TAILORED DECORATIVE /SPECIAL EFFECTS
This section does not apply to this project.

O. ADDITIONAL LIGHTING ALLOWANCE: TAILORED VERY VALUABLE MERCHANDISE
This section does not apply to this project.

P. POWER ADJUSTMENT: LIGHTING CONTROL CREDIT (POWER ADJUSTMENT FACTOR (PAF))
This section does not apply to this project.

Q. RATED POWER REDUCTION COMPLIANCE FOR ONE-FOR-ONE ALTERATIONS
This section does not apply to this project.

R. 80% LIGHTING POWER FOR ALL ALTERATIONS - CONTROLS EXCEPTIONS
This section does not apply to this project.

S. DAYLIGHT DESIGN POWER ADJUSTMENT FACTOR (PAF)
This section does not apply to this project.

T. DWELLING UNIT LIGHTING
This section does not apply to this project.

STATE OF CALIFORNIA
Indoor Lighting
CALIFORNIA ENERGY COMMISSION

CERTIFICATE OF COMPLIANCE		NRCC-LTI-E
Project Name: Tehama County Corning Veteran's Hall	Report Page:	(Page 4 of 8)
	Date Prepared:	10/9/2024

G. MODULAR LIGHTING SYSTEMS
This section does not apply to this project.

H. INDOOR LIGHTING CONTROLS (Not including PAFs)
This table includes lighting controls for conditioned and unconditioned spaces.

Building Level Controls

01	02	03	
Mandatory Demand Response 110.12(c)	Shut-off controls 130.1(c) / 160.5(b)4C	Field Inspector	
		Pass	Fail
Required >= 4,000W subject to multilevel	Whole Building Auto Time Switch	☐	☐

Area Level Controls

04	05	06	07	08	09	10	11	12	
Area Description	Complete Building or Area Category Primary Function Area	Manual Area Controls 130.1(a) / 160.5(b)4A	Multi-Level Controls 130.1(b) / 160.5(b)4B	Shut-Off Controls 130.1(c) // 160.5(b)4C	Primary/Skylit Daylighting 130.1(d) / 160.5(b)4D	Secondary Daylighting 130.1(d) / 160.5(b)4D	Interlocked Systems 140.6(a)1/ 170.2(e)2A	Field Inspector	
								Pass	Fail
Whole Building	All Other Space Types	Readily Accessible	Dimmer	See Building Level	Included	Included	No	☐	☐
					13				
					Plan Sheet Showing Daylit Zones:				

I. LIGHTING POWER ALLOWANCE: COMPLETE BUILDING OR AREA CATEGORY METHODS
Each area complying using the Complete Building or Area Category Methods per 140.6(b) are included in this table. Column 06 indicates if additional lighting power allowances per 140.6(c) or adjustments per 140.6(a) are being used .

Conditioned Spaces

01	02	03	04	05	06

STATE OF CALIFORNIA
Indoor Lighting
CALIFORNIA ENERGY COMMISSION

CERTIFICATE OF COMPLIANCE		NRCC-LTI-E
Project Name: Tehama County Corning Veteran's Hall	Report Page:	(Page 2 of 8)
	Date Prepared:	10/9/2024

C. COMPLIANCE RESULTS
If any cell on this table says "DOES NOT COMPLY" or "COMPLIES with Exceptional Conditions" refer to Table D. for guidance.

Lighting in conditioned and unconditioned spaces must not be combined for compliance per 140.6(b)1 / 170.2(e)	Allowed Lighting Power per 140.6(b) / 170.2(e) (Watts)							Adjusted Lighting Power per 140.6(a) / 170.2(e) (Watts)				Compliance Results
	01	02	03	04		05		06	07		08	09
	Complete Building 140.6(c)1	Area Category 140.6(c)2 / 170.2(e)4	Area Category Additional 140.6(c)2G / 170.2(e)4Av (+)	Tailored 140.6(c)3 / 170.2(e)4B (+)	=	Total Allowed (Watts)	≥	Total Designed (Watts)	Adjustments / PAF Lighting Control Credits 140.6(a)2 / 170.2(e)1B (-)	=	Total Adjusted (Watts) *Includes Adjustments	05 must be >= 08 140.6 / 170.2(e)
	(See Table I)	(See Table I)	(See Table J)	(See Table K)				(See Table F)	(See Table P)			
Conditioned		7,195.6	0		=	7,196	≥	6,820	0	=	6820	COMPLIES
Unconditioned					=		≥			=		
Controls Compliance (See Table H for Details)												COMPLIES
Rated Power Reduction Compliance (See Table Q for Details)												

D. EXCEPTIONAL CONDITIONS
This table is auto-filled with uneditable comments because of selections made or data entered in tables throughout the form.

E. ADDITIONAL REMARKS
This table includes remarks made by the permit applicant to the Authority Having Jurisdiction.

STATE OF CALIFORNIA
Indoor Lighting
CALIFORNIA ENERGY COMMISSION

CERTIFICATE OF COMPLIANCE		NRCC-LTI-E
Project Name: Tehama County Corning Veteran's Hall	Report Page:	(Page 7 of 8)
	Date Prepared:	10/9/2024

U. DECLARATION OF REQUIRED CERTIFICATES OF INSTALLATION
Selections have been made based on information provided in this document. If any selections have been changed by permit applicant, an explanation should be included in Table E. Additional Remarks. These documents must be provided to the building inspector during construction and can be found online

Form/Title
NRCI-LTI-E - Must be submitted for all buildings

V. DECLARATION OF REQUIRED CERTIFICATES OF ACCEPTANCE
Selections have been made based on information provided in this document. If any selections have been changed by the permit applicant, an explanation should be included in Table E. Additional Remarks. These documents must be provided to the building inspector during construction and any with "-A" in the form name must be completed through an Acceptance Test Technician Certification Provider (ATTCP). For more information visit: http://www.energy.ca.gov/title24/attcp/providers.html

Form/Title	Systems/Spaces To Be Field Verified
NRCA-LTI-02-A - Must be submitted for occupancy sensors and automatic time switch controls.	Whole Building Time Switch;
NRCA-LTI-03-A - Must be submitted for automatic daylight controls.	Whole Building;
NRCA-LTI-04-A - Must be submitted for demand responsive lighting controls.	Whole Building Demand Response;

TITLE 24 PROCEDURES FOR TESTING AND ADJUSTING

CONTRACTOR SHALL BE RESPONSIBLE FOR ALL WORK ASSOCIATED WITH FINAL INSPECTION AND APPLICABLE ACCEPTANCE REQUIREMENT PROCEDURES. INCLUDE ALL COSTS IN THE BASE BID. THIS SHALL INCLUDE, BUT NOT BE LIMITED TO, CONSTRUCTION INSPECTION, MEASUREMENTS, MONITORING, FUNCTIONAL TESTING, CALIBRATING, ETC. CONTRACTOR SHALL ASSUME THE ROLE OF "FIELD TECHNICIAN" AND "RESPONSIBLE PERSON" AS DEFINED IN STATE OF CALIFORNIA 2022 BUILDING ENERGY EFFICIENCY STANDARDS NONRESIDENTIAL COMPLIANCE MANUAL SECTIONS 13.1.2.2 AND 13.1.2.3.

LIGHTING CONTROL ACCEPTANCE TESTING AND ADJUSTING PROCEDURES - REFER TO NRCA-LTI-02-A DOCUMENTS.

AUTOMATIC DAYLIGHT CONTROL ACCEPTANCE TESTING AND ADJUSTING PROCEDURES - REFER TO NRCA-LTI-03-A DOCUMENTS.

DEMAND RESPONSE LIGHTING CONTROL ACCEPTANCE TESTING AND ADJUSTING PROCEDURES - REFER TO NRCA-LTI-04-A DOCUMENTS.

INSTITUTIONAL TUNING PAF ACCEPTANCE TESTING AND ADJUSTING PROCEDURES - REFER TO NRCA-LTI-05-A DOCUMENTS.

OUTDOOR LIGHTING CONTROL ACCEPTANCE TESTING AND ADJUSTING PROCEDURES - REFER TO NRCA-LTO-02-A DOCUMENTS.

ALL LIGHTING CONTROLS TESTING AND ADJUSTING DOCUMENTS NOTED ABOVE ARE AVAILABLE FROM THE CALIFORNIA ENERGY COMMISSION WEB SITE AT:
https://www.energy.ca.gov/programs-and-topics/programs/building-energy-efficiency-standards/2022-building-energy-efficiency-5

TITLE 24 GENERAL NOTE

CONTRACTOR SHALL BE RESPONSIBLE FOR ALL WORK ASSOCIATED WITH FINAL INSPECTION AND APPLICABLE ACCEPTANCE REQUIREMENT PROCEDURES. INCLUDE ALL COSTS IN THE BASE BID. THIS SHALL INCLUDE, BUT NOT BE LIMITED TO, CONSTRUCTION INSPECTION, MEASUREMENTS, MONITORING, FUNCTIONAL TESTING, CALIBRATING, ETC. CONTRACTOR SHALL ASSUME THE ROLE OF "FIELD TECHNICIAN" AND "RESPONSIBLE PERSON" AS DEFINED IN STATE OF CALIFORNIA 2022 BUILDING ENERGY EFFICIENCY STANDARDS NONRESIDENTIAL COMPLIANCE MANUAL SECTION 14.1.2.

SEE STATE OF CALIFORNIA 2022 BUILDING ENERGY EFFICIENCY STANDARDS SECTIONS 10-103(a)3A AND 10-103(a)3B AND SECTION 130.4 FOR MORE INFORMATION.

SEE STATE OF CALIFORNIA 2022 BUILDING ENERGY EFFICIENCY STANDARDS NONRESIDENTIAL COMPLIANCE MANUAL CHAPTER 14 FOR MORE DETAILED REQUIREMENTS / INFORMATION.

SEE STATE OF CALIFORNIA 2022 BUILDING ENERGY EFFICIENCY STANDARDS RESIDENTIAL COMPLIANCE MANUAL CHAPTER 2 FOR MORE DETAILED REQUIREMENTS / INFORMATION.

PROVIDE COMPLETED INSTALLATION CERTIFICATE(S) AND CERTIFICATE(S) OF ACCEPTANCE AS REQUIRED TO THE SATISFACTION OF THE ENFORCEMENT AGENCY.

Copyright © 2025
All ideas, designs, arrangements and plans indicated or represented by this drawing are owned by, and the property of, NICHOLS, MELBURG and ROSSETTO and were created, evolved and developed for use on, and in conjunction with, the specified project. None of such ideas, designs, arrangements and plans shall be used, or disclosed to any person, firm or corporation for any purpose whatsoever without the written permission of NICHOLS, MELBURG and ROSSETTO.

NICHOLS MELBURG & ROSSETTO
ARCHITECTS + ENGINEERS
300 KNOLLCREST DRIVE
REDDING, CA 96002
(530) 222-3300 (530) 222-3538 FAX
http://www.nmrdesign.com

CONSULTANTS

tk1sc
Member of WSP
11870 Pierce Street, Suite 160
Riverside, California 92505
951.299.4160 www.tk1sc.com
Project Leader - Jerry Leonhardt
Principal in Charge - Jerry Leonhardt
WSP Job #: B2305166.000

LICENSE STAMPS

REGISTERED PROFESSIONAL ENGINEER
RICHMOND P. SHAFFER
No. E15610
12/31/2025
STATE OF CALIFORNIA

PROJECT NAME

TEHAMA COUNTY
CORNING
VETERAN'S HALL

1620 SOLANO ST.
CORNING, CA

SHEET TITLE

TITLE 24

DRAWING STATUS

CONSTRUCTION DOCUMENTS

REVISIONS

Sym.	Description	Date

Drawn By	
Date Issued	2/13/2025
Scale	-
Project No.	21-6497

SHEET No.

E4.5

Login Name: USG_270366
Plot Date: February 13, 2025 - 9:55 am
File Name: P:\2021\B2305166.000 Corning Veterans Hall Remod\Drawings and Models\CAD\Electrical\E4-5.dwg
XREFS: x-CAL_Title Block

STATE OF CALIFORNIA
Outdoor Lighting
CALIFORNIA ENERGY COMMISSION

CERTIFICATE OF COMPLIANCE		NRCC-LTO-E
Project Name: Tehama County Corning Veteran's Hall	Report Page:	(Page 4 of 7)
	Date Prepared:	10/9/2024

H. OUTDOOR LIGHTING CONTROLS

This table demonstrates compliance with controls requirements for all new or altered luminaires installed as part of the permit application. For alteration projects, luminaires which are existing to remain (ie untouched) and luminaires which are removed and reinstalled (wiring only) do not need to be included in this table even if they are within the spaces covered by the permit application.
Outdoor lighting for nonresidential buildings, parking garages and common service areas in multifamily buildings must be documented separately from outdoor lighting attached to multifamily buildings and controlled from the inside of a dwelling unit

Mandatory Controls for Nonresidential Occupancies, Parking Garages & Common Areas in Multifamily Buildings

01	02	03	04	05	
Area Description	Shut-Off 130.2(c)1 / 160.5(c)	Auto-Schedule 130.2(c)2 / 160.5(c)	Motion Sensor 130.2(c)3 / 160.5(c)	Field Inspector	
				Pass	Fail

[1] *FOOTNOTE: Text has been abbreviated, please refer to Table 160.5-A to confirm compliance with the specific light source technologies listed.*
[2] *Authority having jurisdiction may ask for cutsheets or other documentation to confirm compliance of light source.*
[3] *Recessed luminaires marked for use in fire-rated installations, and recessed luminaires installed in non-insulated ceilings are excepted from ii and iii.*

STATE OF CALIFORNIA
Outdoor Lighting
CALIFORNIA ENERGY COMMISSION

CERTIFICATE OF COMPLIANCE		NRCC-LTO-E
Project Name: Tehama County Corning Veteran's Hall	Report Page:	(Page 2 of 7)
	Date Prepared:	10/9/2024

C. COMPLIANCE RESULTS

Results in this table are automatically calculated from data input and calculations in Tables F through N. Note: If any cell on this table says "COMPLIES with Exceptional Conditions" refer to Table D. Exceptional Conditions for guidance or see applicable Table referenced below.

Calculations of Total Allowed Lighting Power (Watts) 140.7 / 170.2(e)6 or 141.0(b)2L / 180.2(b)4Bv														Compliance Results		
01		02		03		04		05		06		07		08	09
General Hardscape Allowance 140.7(d)1 / 170.2(e)6 (See Table I)	+	Per Application 140.7(d)2 / 170.2(e)6 (See Table J)	+	Sales Frontage 140.7(d)2 (See Table K)	+	Ornamental 140.7(d)2 / 170.2(e)6 (See Table L)	+	Per Specific Area 140.7(d)2 / 170.2(e)6 (See Table M)	OR	Existing Power Allowance 141.0(b)2L / 180.2(b)4Bv (See Table N)	=	**Total Allowed** (Watts)	≥	**Total Actual** (Watts)	**07 must be >= 08**
706	+	---	+	---	+	---	+	---	OR	---	=	706	≥	654	COMPLIES
Shielding Compliance (See Table G for Details)															N/A
Controls Compliance (See Table H for Details)															Not applicable

D. EXCEPTIONAL CONDITIONS

This table is auto-filled with uneditable comments because of selections made or data entered in tables throughout the form.

E. ADDITIONAL REMARKS

This table includes remarks made by the permit applicant to the Authority Having Jurisdiction.

STATE OF CALIFORNIA
Indoor Lighting
CALIFORNIA ENERGY COMMISSION

CERTIFICATE OF COMPLIANCE		NRCC-LTI-E
Project Name: Tehama County Corning Veteran's Hall	Report Page:	(Page 8 of 8)
Project Address: 1620 Solano Street	Date Prepared:	10/9/2024

DOCUMENTATION AUTHOR'S DECLARATION STATEMENT

I certify that this Certificate of Compliance documentation is accurate and complete.

Documentation Author Name: Ray Swartz	Documentation Author Signature:
Company: WSP USA	Signature Date: 2024-10-09
Address: 15231 Laguna Canyon Road Suite 100	CEA/ HERS Certification Identification (if applicable): E15610
City/State/Zip: Irvine CA 92618	Phone: 949-751-5800

RESPONSIBLE PERSON'S DECLARATION STATEMENT

I certify the following under penalty of perjury, under the laws of the State of California:
1. The information provided on this Certificate of Compliance is true and correct.
2. I am eligible under Division 3 of the Business and Professions Code to accept responsibility for the building design or system design identified on this Certificate of Compliance (responsible designer)
3. The energy features and performance specifications, materials, components, and manufactured devices for the building design or system design identified on this Certificate of Compliance conform to the requirements of Title 24, Part 1 and Part 6 of the California Code of Regulations.
4. The building design features or system design features identified on this Certificate of Compliance are consistent with the information provided on other applicable compliance documents, worksheets, calculations, plans and specifications submitted to the enforcement agency for approval with this building permit application.
5. I will ensure that a completed signed copy of this Certificate of Compliance shall be made available with the building permit(s) issued for the building, and made available to the enforcement agency for all applicable inspections. I understand that a completed signed copy of this Certificate of Compliance is required to be included with the documentation the builder provides to the building owner at occupancy.

Responsible Designer Name: Ray Swartz	Responsible Designer Signature:
Company: WSP / tk1sc	Date Signed: 2024-10-09
Address: 15231 Laguna Canyon Road, Suite 100	License: E15610
City/State/Zip: Irvine CA 92618	Phone: 949-751-5800

STATE OF CALIFORNIA
Outdoor Lighting
CALIFORNIA ENERGY COMMISSION

CERTIFICATE OF COMPLIANCE		NRCC-LTO-E
Project Name: Tehama County Corning Veteran's Hall	Report Page:	(Page 5 of 7)
	Date Prepared:	10/9/2024

I. LIGHTING POWER ALLOWANCE (per 140.7 / 170.2(e))

This table includes areas using allowance calculations per 140.7 / 170.2(e). General Hardscape Allowance is per Table 140.7-A/Table 170.2-R while "Use it or lose it" Allowances are per Table 140.7-B /Table 170.2-S. Indicate which allowances are being used to expand sections for user input. Luminaires that qualify for one of the "Use it or lose it" allowances shall not qualify for another "Use it or lose it" allowance.
Outdoor lighting attached to multifamily buildings and controlled from the inside of a dwelling unit are included in Table H. and are not included here. All other multifamily outdoor lighting is included here.

	01				
		"Use it or lose it" Allowance (select all that apply) (select all that apply)			
	☒ General Hardscape Allowance Table I (below)	☐ Per Application Table J	☐ Sales Frontage Table K	☐ Ornamental Table L	☐ Per Specific Area Table M

Calculated General Hardscape Lighting Power Allowance per Table 140.7-A for Nonresidential & Hotel/Motel

02	03	04	05	06	07	08	09
Area Description	Area Wattage Allowance (AWA)			Linear Wattage Allowance (LWA)			Total General AWA + LWA (Watts)
	Illuminated Area (ft^2)	Allowed Density (W/ft^2)	Area Allowance (Watts)	Perimeter Length (lf)	Allowed Density (W/lf)	Linear Allowance (Watts)	
PARKING LOT	19724	0.019	374.8	635	0.2	95.2	470
ENTRY 117 WALKWAY	196	0.019	3.7	215	0.2	32.2	36
Initial Wattage Allowance for Entire Site (Watts):							200
Instances of Initial Wattage Allowance (LZ 0 only)[1]							
Total General Hardscape Allowance (Watts):							706

J. LIGHTING ALLOWANCE: PER APPLICATION

This section does not apply to this project.

K. LIGHTING ALLOWANCE: SALES FRONTAGE

This section does not apply to this project.

L. LIGHTING ALLOWANCE: ORNAMENTAL

This section does not apply to this project.

STATE OF CALIFORNIA
Outdoor Lighting
CALIFORNIA ENERGY COMMISSION

CERTIFICATE OF COMPLIANCE		NRCC-LTO-E
Project Name: Tehama County Corning Veteran's Hall	Report Page:	(Page 3 of 7)
	Date Prepared:	10/9/2024

F. OUTDOOR LIGHTING FIXTURE SCHEDULE

For new or altered lighting systems demonstrating compliance with 140.7 / 170.2(e)6 all new luminaires being installed and any existing luminaires remaining or being moved within the spaces covered by the permit application are included in the Table below. For altered lighting systems using the Existing Power method per 141.0(b)2L only new luminaires being installed and replacement luminaires being installed as part of the project scope are included (ie, existing luminaires remaining or existing luminaires being moved are not included). Outdoor lighting attached to multifamily buildings and controlled from the inside of a dwelling unit are included in Table H. and are not included here. All other multifamily outdoor lighting is included here.

Designed Wattage:

01	02		03	04	05	06	07	08	09	10	
Name or Item Tag	Complete Luminaire Description		Watts per luminaire[1, 2]	How is Wattage determined	Total Number Luminaires[2]	Luminaire Status[3]	Excluded per 140.7(a) / 170.2(e)6A	Design Watts	Cutoff Req. > 6,200 initial lumen output 130.2(b) / 160.5(c)[4]	Field Inspector	
										Pass	Fail
S1	S1 - SINGLE LUMINARE LED POLE MOUNTED	☐ Linear	105	Mfr. Spec	6	New	☐	630	NA: < 6200 lumens	☐	☐
S3	S3 -TWIN FLOODLIGHT LED	☐ Linear	23.6	Mfr. Spec	1	New	☐	23.6	NA: < 6200 lumens	☐	☐
							Total Design Watts:	654			

* NOTES: Selections with a * require a note in the space below explaining how compliance is achieved.
EX: Luminaire is lighting a statue; EXCEPTION 2 to 130.2(b)

[1] *FOOTNOTES: Authority Having Jurisdiction may ask for Luminaire cut sheets to confirm wattage used for compliance per 130.0(c) / 160.5(b)*
[2] *For linear luminaires, wattage should be indicated as W/lf instead of Watts/luminaire. Total linear feet should be indicated in column 05 instead of number of luminaires.*
[3] *Select "New" for new luminaires in a new outdoor lighting project, or for added luminaires in an alteration. Select "Altered" for replacement luminaires in an alteration. Select "Existing to Remain" for existing luminaires within the project scope that are not being altered and are remaining. Select "Existing Reinstalled" for existing luminaires which are being removed and reinstalled as part of the project scope.*
[4] *Compliance with mandatory shielding requirements is required for luminaires with initial lumen output >= 6,200 unless exempted by 130.2(b)/ 160.5(c)*

G. SHIELDING REQUIREMENTS (BUG)

This section does not apply to this project.

STATE OF CALIFORNIA
Outdoor Lighting
CALIFORNIA ENERGY COMMISSION

CERTIFICATE OF COMPLIANCE		NRCC-LTO-E
Project Name: Tehama County Corning Veteran's Hall	Report Page:	(Page 1 of 7)
Project Address: 1620 Solano Street	Date Prepared:	10/9/2024

This document is used to demonstrate compliance with requirements in 110.9, 130.0, 130.2, 140.7, and 141.0(b)2L for outdoor lighting scopes using the prescriptive path for nonresidential and hotel/motel occupancies. It is also used to document compliance with requirements in 160.5, 170.2(e)6, 180.1(a) and 180.2(b)4Bv for outdoor lighting scopes using the prescriptive path for multifamily and mixed-use occupancies. Multifamily includes dormitory and senior living facilities.

A. GENERAL INFORMATION

01	Project Location (city)	Corning	04 Total Illuminated Hardscape Area (ft^2)	19920
02	Climate Zone	11		
03	Outdoor Lighting Zone per Title 24 Part 1 10.114 or as designated by Authority Having Jurisdiction (AHJ):			
☐	LZ-0: Very Low - Undeveloped Parkland	☒ LZ-2: Moderate - Urban Clusters	☐ LZ-4: High - Must be reviewed by CA Energy Commission for Approval	
☐	LZ-1: Low - Rural Areas	☐ LZ-3: Moderately High - Urban Areas		
05	Occupancy Types within Project			
● Auditorium ● Office ● Support Areas ● All Other Occupancies				

B. PROJECT SCOPE

This table includes outdoor lighting systems that are within the scope of the permit application and are demonstrating compliance using the prescriptive path outlined in 140.7 / 170.2(e)6 or 141.0(b)2L / 180.2(b)4Bv for alterations.

My Project Consists of:

01	02	
☒ New Lighting System	Must Comply with Allowances from 140.7 / 170.2(e)6	
☐ Altered Lighting System	Is your alteration increasing the connected lighting load (Watts)?	○ Yes ○ No
03	04	05
% of Existing Luminaires Being Altered[1]	Sum Total of Luminaires Being Added or Altered	Calculation Method
☐ < 10% ☐ >= 10% and < 50% ☐ >= 50%		

Please proceed to Table F. Outdoor Lighting Fixture Schedule to define the project's luminaires.

[1] *FOOTNOTES: % of Existing Luminaires Being Altered = (Sum Total of Luminaires Being Added or Altered / Existing Luminaires within the Scope of the Permit Application) x 100.*

STATE OF CALIFORNIA
Outdoor Lighting
CALIFORNIA ENERGY COMMISSION

CERTIFICATE OF COMPLIANCE		NRCC-LTO-E
Project Name: Tehama County Corning Veteran's Hall	Report Page:	(Page 6 of 7)
	Date Prepared:	10/9/2024

M. LIGHTING ALLOWANCE: PER SPECIFIC AREA

This section does not apply to this project.

N. EXISTING CONDITIONS POWER ALLOWANCE (alterations only)

This section does not apply to this project.

O. DECLARATION OF REQUIRED CERTIFICATES OF INSTALLATION

Selections have been made based on information provided in this document. If any selection has been changed by permit applicant, an explanation should be included in Table E. Additional Remarks. These documents must be provided to the building inspector during construction and can be found online

Form/Title
NRCI-LTO-E - Must be submitted for all buildings

P. DECLARATION OF REQUIRED CERTIFICATES OF ACCEPTANCE

There are no NRCA forms required for this project.

TITLE 24 PROCEDURES FOR TESTING AND ADJUSTING

CONTRACTOR SHALL BE RESPONSIBLE FOR ALL WORK ASSOCIATED WITH FINAL INSPECTION AND APPLICABLE ACCEPTANCE REQUIREMENT PROCEDURES. INCLUDE ALL COSTS IN THE BASE BID. THIS SHALL INCLUDE, BUT NOT BE LIMITED TO, CONSTRUCTION INSPECTION, MEASUREMENTS, MONITORING, FUNCTIONAL TESTING, CALIBRATING, ETC. CONTRACTOR SHALL ASSUME THE ROLE OF "FIELD TECHNICIAN" AND "RESPONSIBLE PERSON" AS DEFINED IN STATE OF CALIFORNIA 2022 BUILDING ENERGY EFFICIENCY STANDARDS NONRESIDENTIAL COMPLIANCE MANUAL SECTIONS 13.1.2.2 AND 13.1.2.3.

LIGHTING CONTROL ACCEPTANCE TESTING AND ADJUSTING PROCEDURES - REFER TO NRCA-LTI-02-A DOCUMENTS.

AUTOMATIC DAYLIGHT CONTROL ACCEPTANCE TESTING AND ADJUSTING PROCEDURES - REFER TO NRCA-LTI-03-A DOCUMENTS.

DEMAND RESPONSE LIGHTING CONTROL ACCEPTANCE TESTING AND ADJUSTING PROCEDURES - REFER TO NRCA-LTI-04-A DOCUMENTS.

INSTITUTIONAL TUNING PAF ACCEPTANCE TESTING AND ADJUSTING PROCEDURES - REFER TO NRCA-LTI-05-A DOCUMENTS.

OUTDOOR LIGHTING CONTROL ACCEPTANCE TESTING AND ADJUSTING PROCEDURES - REFER TO NRCA-LTO-02-A DOCUMENTS.

ALL LIGHTING CONTROLS TESTING AND ADJUSTING DOCUMENTS NOTED ABOVE ARE AVAILABLE FROM THE CALIFORNIA ENERGY COMMISSION WEB SITE AT:
https://www.energy.ca.gov/programs-and-topics/programs/building-energy-efficiency-standards/2022-building-energy-efficiency-5

TITLE 24 GENERAL NOTE

CONTRACTOR SHALL BE RESPONSIBLE FOR ALL WORK ASSOCIATED WITH FINAL INSPECTION AND APPLICABLE ACCEPTANCE REQUIREMENT PROCEDURES. INCLUDE ALL COSTS IN THE BASE BID. THIS SHALL INCLUDE, BUT NOT BE LIMITED TO, CONSTRUCTION INSPECTION, MEASUREMENTS, MONITORING, FUNCTIONAL TESTING, CALIBRATING, ETC. CONTRACTOR SHALL ASSUME THE ROLE OF "FIELD TECHNICIAN" AND "RESPONSIBLE PERSON" AS DEFINED IN STATE OF CALIFORNIA 2022 BUILDING ENERGY EFFICIENCY STANDARDS NONRESIDENTIAL COMPLIANCE MANUAL SECTION 14.1.2.

SEE STATE OF CALIFORNIA 2022 BUILDING ENERGY EFFICIENCY STANDARDS SECTIONS 10-103(a)3A AND 10-103(a)3B AND SECTION 130.4 FOR MORE INFORMATION.

SEE STATE OF CALIFORNIA 2022 BUILDING ENERGY EFFICIENCY STANDARDS NONRESIDENTIAL COMPLIANCE MANUAL CHAPTER 14 FOR MORE DETAILED REQUIREMENTS / INFORMATION.

SEE STATE OF CALIFORNIA 2022 BUILDING ENERGY EFFICIENCY STANDARDS RESIDENTIAL COMPLIANCE MANUAL CHAPTER 2 FOR MORE DETAILED REQUIREMENTS / INFORMATION.

PROVIDE COMPLETED INSTALLATION CERTIFICATE(S) AND CERTIFICATE(S) OF ACCEPTANCE AS REQUIRED TO THE SATISFACTION OF THE ENFORCEMENT AGENCY.

Copyright © 2025
All ideas, designs, arrangements and plans indicated or represented by this drawing are owned by, and the property of, NICHOLS, MELBURG and ROSSETTO and were created, evolved and developed for use on, and in conjunction with, the specified project. None of such ideas, designs, arrangements and plans shall be used, or disclosed to any person, firm or corporation for any purpose whatsoever without the written permission of NICHOLS, MELBURG and ROSSETTO.

NICHOLS MELBURG & ROSSETTO
ARCHITECTS + ENGINEERS
300 KNOLLCREST DRIVE
REDDING, CA 96002
(530) 222-3300 (530) 222-3538 FAX
http://www.nmrdesign.com

CONSULTANTS

tk1sc
Member of WSP
11870 Pierce Street, Suite 160
Riverside, California 92505
951.299.4160 www.tk1sc.com

Project Leader - Jerry Leonhardt
Electrical Lead - Jerry Leonhardt
WSP Job #: B2305166.000

LICENSE STAMPS

REGISTERED PROFESSIONAL ENGINEER
RAYMOND P. SWARTZ
No. E15610
Exp. 12/31/2025
ELECTRICAL
STATE OF CALIFORNIA

PROJECT NAME

TEHAMA COUNTY
CORNING
VETERAN'S HALL

1620 SOLANO ST.
CORNING, CA

SHEET TITLE

TITLE 24

DRAWING STATUS

CONSTRUCTION DOCUMENTS

REVISIONS

Sym.	Description	Date

Drawn By	
Date Issued	2/13/2025
Scale	-
Project No.	21-6497

SHEET No.

E4.6

Login Name: LEGL270396
Plot Date: February 13, 2025 9:36 am
File Name: P:\2021\B2305166\00 Corning Veterans Hall Remod\Drawings and Models\CAD\Electrical\E4-6.dwg
PAPER: 8 X 11 - LL - No Block

STATE OF CALIFORNIA

Outdoor Lighting

CALIFORNIA ENERGY COMMISSION

CERTIFICATE OF COMPLIANCE			NRCC-LTO-E
Project Name:	Tehama County Corning Veteran's Hall	**Report Page:**	**(Page 7 of 7)**
Project Address:	1620 Solano Street	**Date Prepared:**	10/9/2024

DOCUMENTATION AUTHOR'S DECLARATION STATEMENT	
I certify that this Certificate of Compliance documentation is accurate and complete.	
Documentation Author Name: Ray Swartz	Documentation Author Signature:
Company: WSP USA	Signature Date: 2024-10-09
Address: 15231 Laguna Canyon Road Suite 100	CEA/ HERS Certification Identification (if applicable): E15610
City/State/Zip: Irvine CA 92618	Phone: 949-751-5800

RESPONSIBLE PERSON'S DECLARATION STATEMENT

I certify the following under penalty of perjury, under the laws of the State of California:

1. The information provided on this Certificate of Compliance is true and correct.
2. I am eligible under Division 3 of the Business and Professions Code to accept responsibility for the building design or system design identified on this Certificate of Compliance (responsible designer)
3. The energy features and performance specifications, materials, components, and manufactured devices for the building design or system design identified on this Certificate of Compliance conform to the requirements of Title 24, Part 1 and Part 6 of the California Code of Regulations.
4. The building design features or system design features identified on this Certificate of Compliance are consistent with the information provided on other applicable compliance documents, worksheets, calculations, plans and specifications submitted to the enforcement agency for approval with this building permit application.
5. I will ensure that a completed signed copy of this Certificate of Compliance shall be made available with the building permit(s) issued for the building, and made available to the enforcement agency for all applicable inspections. I understand that a completed signed copy of this Certificate of Compliance is required to be included with the documentation the builder provides to the building owner at occupancy.

Responsible Designer Name: Ray Swartz	Responsible Designer Signature:
Company: WSP / tk1sc	Date Signed: 2024-10-09
Address: 15231 Laguna Canyon Road, Suite 100	License: E15610
City/State/Zip: Irvine CA 92618	Phone: 949-751-5800

Generated Date/Time:

Documentation Software: EnergyPro

CA Building Energy Efficiency Standards - 2022 Nonresidential Compliance

Report Version: 2022.0.000
Schema Version: rev 20220101

Compliance ID: EnergyPro-2945-1024-4362
Report Generated: 2024-10-09 13:42:47

TITLE 24 PROCEDURES FOR TESTING AND ADJUSTING

CONTRACTOR SHALL BE RESPONSIBLE FOR ALL WORK ASSOCIATED WITH FINAL INSPECTION AND APPLICABLE ACCEPTANCE REQUIREMENT PROCEDURES. INCLUDE ALL COSTS IN THE BASE BID. THIS SHALL INCLUDE, BUT NOT BE LIMITED TO, CONSTRUCTION INSPECTION, MEASUREMENTS, MONITORING, FUNCTIONAL TESTING, CALIBRATING, ETC. CONTRACTOR SHALL ASSUME THE ROLE OF "FIELD TECHNICIAN" AND "RESPONSIBLE PERSON" AS DEFINED IN STATE OF CALIFORNIA 2022 BUILDING ENERGY EFFICIENCY STANDARDS NONRESIDENTIAL COMPLIANCE MANUAL SECTIONS 13.1.2.2 AND 13.1.2.3.

LIGHTING CONTROL ACCEPTANCE TESTING AND ADJUSTING PROCEDURES - REFER TO NRCA-LTI-02-A DOCUMENTS.

AUTOMATIC DAYLIGHT CONTROL ACCEPTANCE TESTING AND ADJUSTING PROCEDURES - REFER TO NRCA-LTI-03-A DOCUMENTS.

DEMAND RESPONSE LIGHTING CONTROL ACCEPTANCE TESTING AND ADJUSTING PROCEDURES - REFER TO NRCA-LTI-04-A DOCUMENTS.

INSTITUTIONAL TUNING PAF ACCEPTANCE TESTING AND ADJUSTING PROCEDURES - REFER TO NRCA-LTI-05-A DOCUMENTS.

OUTDOOR LIGHTING CONTROL ACCEPTANCE TESTING AND ADJUSTING PROCEDURES - REFER TO NRCA-LTO-02-A DOCUMENTS.

ALL LIGHTING CONTROLS TESTING AND ADJUSTING DOCUMENTS NOTED ABOVE ARE AVAILABLE FROM THE CALIFORNIA ENERGY COMMISSION WEB SITE AT:
https://www.energy.ca.gov/programs-and-topics/programs/building-energy-efficiency-standards/2022-building-energy-efficiency-5

TITLE 24 GENERAL NOTE

CONTRACTOR SHALL BE RESPONSIBLE FOR ALL WORK ASSOCIATED WITH FINAL INSPECTION AND APPLICABLE ACCEPTANCE REQUIREMENT PROCEDURES. INCLUDE ALL COSTS IN THE BASE BID. THIS SHALL INCLUDE, BUT NOT BE LIMITED TO, CONSTRUCTION INSPECTION, MEASUREMENTS, MONITORING, FUNCTIONAL TESTING, CALIBRATING, ETC. CONTRACTOR SHALL ASSUME THE ROLE OF "FIELD TECHNICIAN" AND "RESPONSIBLE PERSON" AS DEFINED IN STATE OF CALIFORNIA 2022 BUILDING ENERGY EFFICIENCY STANDARDS NONRESIDENTIAL COMPLIANCE MANUAL SECTION 14.1.2.

SEE STATE OF CALIFORNIA 2022 BUILDING ENERGY EFFICIENCY STANDARDS SECTIONS 10-103(a)3A AND 10-103(a)3B AND SECTION 130.4 FOR MORE INFORMATION.

SEE STATE OF CALIFORNIA 2022 BUILDING ENERGY EFFICIENCY STANDARDS NONRESIDENTIAL COMPLIANCE MANUAL CHAPTER 14 FOR MORE DETAILED REQUIREMENTS / INFORMATION.

SEE STATE OF CALIFORNIA 2022 BUILDING ENERGY EFFICIENCY STANDARDS RESIDENTIAL COMPLIANCE MANUAL CHAPTER 2 FOR MORE DETAILED REQUIREMENTS / INFORMATION.

PROVIDE COMPLETED INSTALLATION CERTIFICATE(S) AND CERTIFICATE(S) OF ACCEPTANCE AS REQUIRED TO THE SATISFACTION OF THE ENFORCEMENT AGENCY.

Copyright © 2025

All ideas, designs, arrangements and plans indicated or represented by this drawing are owned by, and the property of, NICHOLS, MELBURG and ROSSETTO and were created, evolved and developed for use on, and in conjunction with, the specified project. None of such ideas, designs, arrangements and plans shall be used by or disclosed to any person, firm or corporation for any purpose whatsoever without the written permission of NICHOLS, MELBURG and ROSSETTO.

NICHOLS MELBURG & ROSSETTO
ARCHITECTS + ENGINEERS

300 KNOLLCREST DRIVE
REDDING, CA. 96002
(530) 222-3300 (530) 222-3538 FAX
http://www.nmrdesign.com

CONSULTANTS

tk1sc
Member of WSP

11870 Pierce Street, Suite 160
Riverside, California 92505
951.299.4160 www.tk1sc.com

Project Leader - Jerry Leonhardt
Project Manager - Ray Swartz
WSP Job #: B2305166.000

LICENSE STAMPS

REGISTERED PROFESSIONAL ENGINEER
RAYMOND W. SWARTZ
No. E15610
12/31/2025
ELECTRICAL
STATE OF CALIFORNIA

PROJECT NAME

TEHAMA COUNTY
CORNING
VETERAN'S HALL

1620 SOLANO ST.
CORNING, CA

SHEET TITLE

TITLE 24

DRAWING STATUS

CONSTRUCTION DOCUMENTS

REVISIONS

Sym.	Description	Date

Drawn By	
Date Issued	2/13/2025
Scale	-
Project No.	21-6497

SHEET No.

E4.7

Login Name: USGL770296
Plot Date: February 13, 2025 - 9:56 am
File Name: P:\2021\B2305166\000 Corning Veterans Hall Remod\Drawings and Models\CAD\Electrical\E4-7.dwg
Plotted By: Kohl, Rita Black

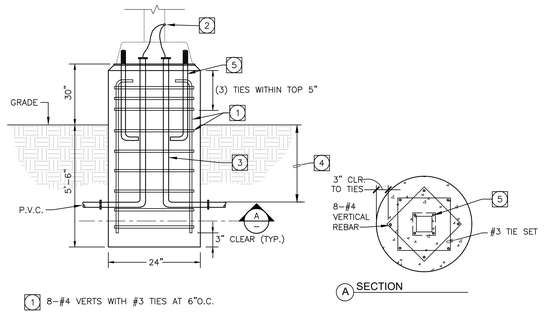

1. 8-#4 VERTS WITH #3 TIES AT 6"O.C.
2. BOND EQUIPMENT GROUND TO POLE.
3. BRANCH CIRCUIT CONDUIT PER SITE PLAN.
4. PROVIDE MINIMUM COVER OF 24" FROM FINISH GRADE.
5. 3/4" x 25" POLE ANCHOR BOLTS, SPACING TO MATCH MANUFACTURER'S BASE PLATE.

RAISED POLE BASE DETAIL (5)

SCALE: N.T.S.

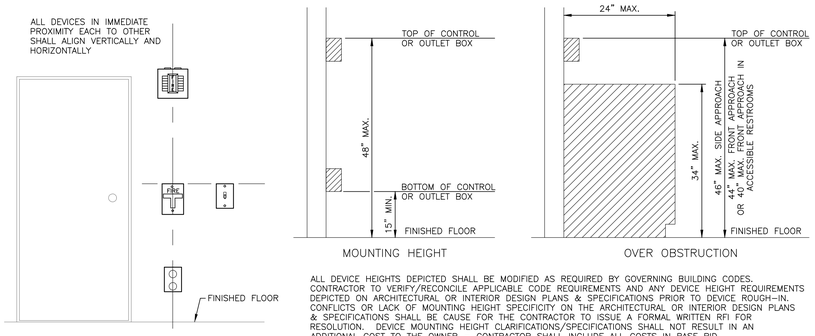

ALL DEVICE HEIGHTS DEPICTED SHALL BE MODIFIED AS REQUIRED BY GOVERNING BUILDING CODES. CONTRACTOR TO VERIFY/RECONCILE APPLICABLE CODE REQUIREMENTS AND ANY DEVICE HEIGHT REQUIREMENTS DEPICTED ON ARCHITECTURAL OR INTERIOR DESIGN PLANS & SPECIFICATIONS PRIOR TO DEVICE ROUGH-IN. CONFLICTS OR LACK OF MOUNTING HEIGHT SPECIFICITY ON THE ARCHITECTURAL OR INTERIOR DESIGN PLANS & SPECIFICATIONS SHALL BE CAUSE FOR THE CONTRACTOR TO ISSUE A FORMAL WRITTEN RFI FOR RESOLUTION. DEVICE MOUNTING HEIGHT CLARIFICATIONS/SPECIFICATIONS SHALL NOT RESULT IN AN ADDITIONAL COST TO THE OWNER – CONTRACTOR SHALL INCLUDE ALL COSTS IN BASE BID.

DEVICE ALIGNMENT & MOUNTING HEIGHT DETAILS (1)

SCALE: N.T.S.

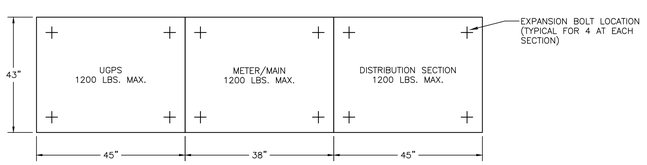

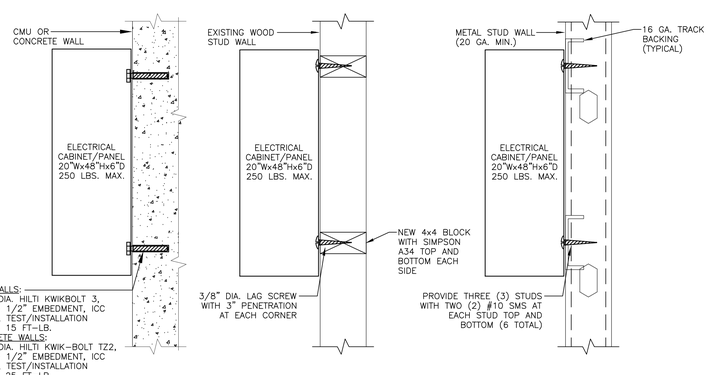

SURFACE PANEL MOUNTING (2)

SCALE: N.T.S.

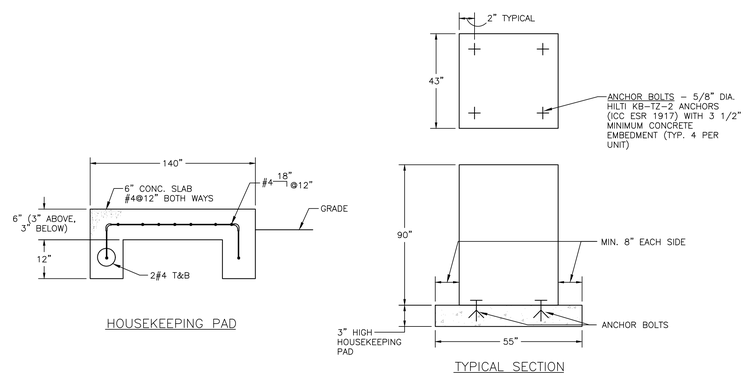

SWITCHBOARD / INVERTER ANCHORAGE DETAIL (6)

SCALE: N.T.S.

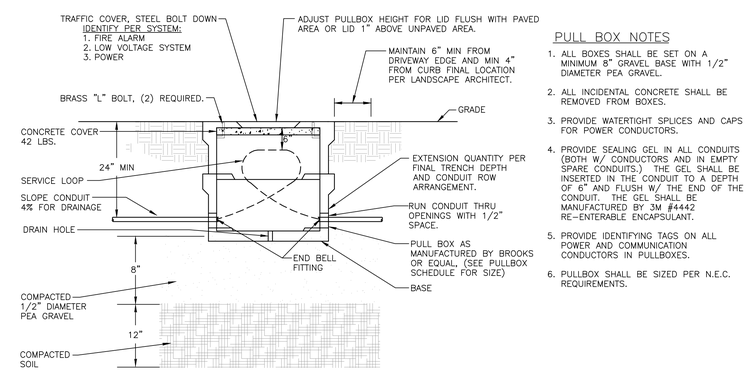

PULL BOX NOTES

1. ALL BOXES SHALL BE SET ON A MINIMUM 8" GRAVEL BASE WITH 1/2" DIAMETER PEA GRAVEL.
2. ALL INCIDENTAL CONCRETE SHALL BE REMOVED FROM BOXES.
3. PROVIDE WATERTIGHT SPLICES AND CAPS FOR POWER CONDUCTORS.
4. PROVIDE SEALING GEL IN ALL CONDUITS (BOTH W/ CONDUCTORS AND IN EMPTY SPARE CONDUITS.) THE GEL SHALL BE INSERTED IN THE CONDUIT TO A DEPTH OF 6" AND FLUSH W/ THE END OF THE CONDUIT. THE GEL SHALL BE MANUFACTURED BY 3M #4442 RE-ENTERABLE ENCAPSULANT.
5. PROVIDE IDENTIFYING TAGS ON ALL POWER AND COMMUNICATION CONDUCTORS IN PULLBOXES.
6. PULLBOX SHALL BE SIZED PER N.E.C. REQUIREMENTS.

PULL BOX DETAIL (3)

SCALE: N.T.S.

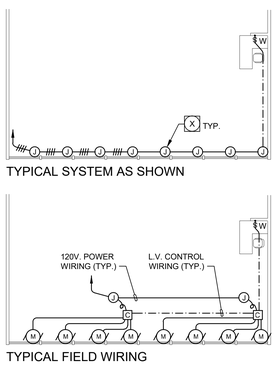

TYPICAL SYSTEM AS SHOWN

TYPICAL FIELD WIRING

PLAN NOTES:

X. CONNECT TO MOTORIZED SHADES AS REQUIRED. PROVIDE ALL J-BOXES, LOW VOLTAGE AND LINE VOLTAGE CONTROLS, CONDUIT, CONDUCTORS, SIZED AND INSTALLED PER MOTORIZED SHADE MANUFACTURER'S REQUIREMENTS FOR A COMPLETE AND OPERABLE MOTORIZED SHADE SYSTEM. COORDINATE INSTALLATION REQUIREMENTS WITH SHADE INSTALLER PRIOR TO ROUGH-IN. INCLUDE ALL COSTS IN BASE BID.

WINDOW SHADE DIAGRAM (L.V.) (7)

SCALE: N.T.S.

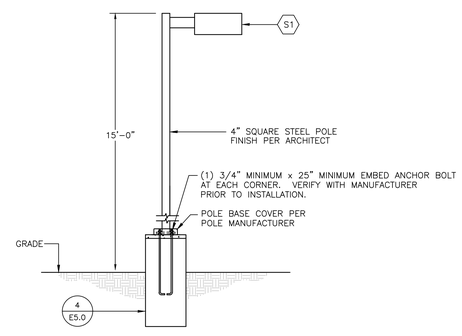

POLE MOUNTED FIXTURE DETAIL (4)

SCALE: N.T.S.

Copyright © 2025
All ideas, designs, arrangements and plans indicated or represented by this drawing are owned by, and the property of, NICHOLS, MELBURG and ROSSETTO and were created, evolved and developed for use on, and in conjunction with, the specified project. None of such ideas, designs, arrangements and plans shall be used by or disclosed to any person, firm or corporation for any purpose whatsoever without the written permission of NICHOLS, MELBURG and ROSSETTO.

NICHOLS MELBURG & ROSSETTO
ARCHITECTS + ENGINEERS
300 KNOLLCREST DRIVE
REDDING, CA 96002
(530) 222-3300 (530) 222-3538 FAX
http://www.nmrdesign.com

CONSULTANTS

tk1sc
Member of WSP
11870 Pierce Street, Suite 160
Riverside, California 92505
951.299.4160 www.tk1sc.com
Project Leader - Jerry Leonhardt
Electrical Lead - Jerry Leonhardt
WSP Job #: B2305166.000

LICENSE STAMPS

REGISTERED PROFESSIONAL ENGINEER RICHARD W. SWARTZ No. E15610 12/31/2025 STATE OF CALIFORNIA

PROJECT NAME

TEHAMA COUNTY
CORNING
VETERAN'S HALL

1820 SOLANO ST.
CORNING, CA

SHEET TITLE

MISCELLANEOUS DETAILS

DRAWING STATUS

CONSTRUCTION DOCUMENTS

REVISIONS

Sym.	Description	Date

Drawn By	
Date Issued	2/13/2025
Scale	-
Project No.	21-6497

SHEET No.

E5.0

Logo Name: LRG_770396
Plot Date: February 13, 2025 - 9:27 am
File Name: P:\2021\B2305166.000 Corning Veterans Hall Remod\Drawings and Models\CAD\Electrical\E5-0.dwg
PSPB S: HOVLL file 36x24

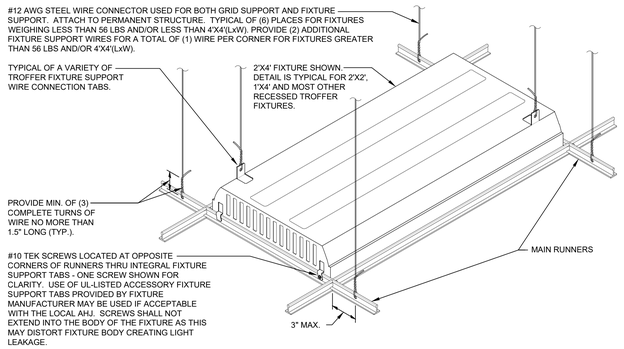

2 FIXTURE SUPPORT DETAIL

SCALE: NTS

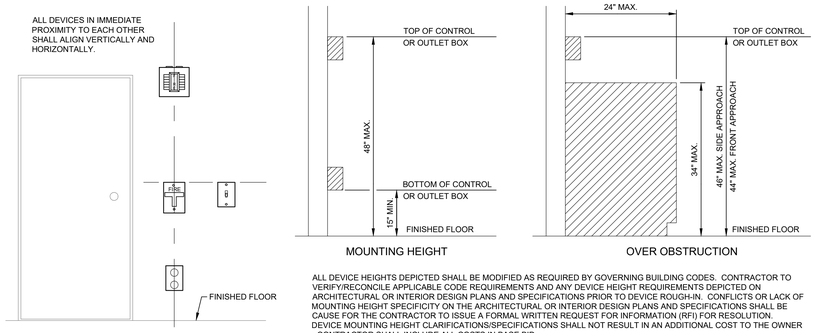

ALL DEVICE HEIGHTS DEPICTED SHALL BE MODIFIED AS REQUIRED BY GOVERNING BUILDING CODES. CONTRACTOR TO VERIFY/RECONCILE APPLICABLE CODE REQUIREMENTS AND ANY DEVICE HEIGHT REQUIREMENTS DEPICTED ON ARCHITECTURAL OR INTERIOR DESIGN PLANS AND SPECIFICATIONS PRIOR TO DEVICE ROUGH-IN. CONFLICTS OR LACK OF MOUNTING HEIGHT SPECIFICITY ON THE ARCHITECTURAL OR INTERIOR DESIGN PLANS AND SPECIFICATIONS SHALL BE CAUSE FOR THE CONTRACTOR TO ISSUE A FORMAL WRITTEN REQUEST FOR INFORMATION (RFI) FOR RESOLUTION. DEVICE MOUNTING HEIGHT CLARIFICATIONS/SPECIFICATIONS SHALL NOT RESULT IN AN ADDITIONAL COST TO THE OWNER - CONTRACTOR SHALL INCLUDE ALL COSTS IN BASE BID.

1 DEVICE ALIGNMENT & MOUNTING HEIGHT DETAILS

SCALE: NTS

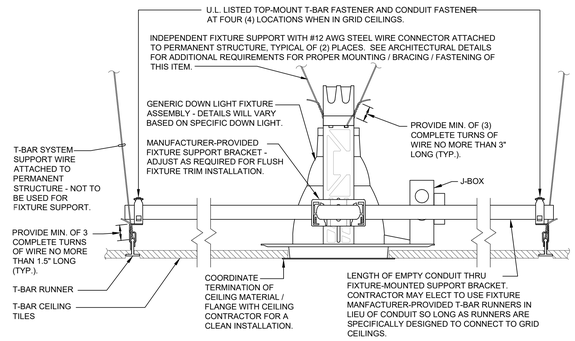

4 DOWN LIGHT FIXTURE SUPPORT DETAIL (T-BAR)

SCALE: NTS

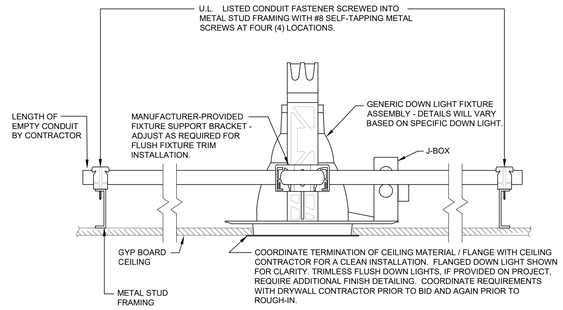

3 DOWN LIGHT FIXTURE SUPPORT DETAIL (HARD LID)

SCALE: NTS

Copyright © 2025

All ideas, designs, arrangements and plans indicated or represented by this drawing are owned by, and the property of, NICHOLS, MELBURG and ROSSETTO and were created, evolved and developed for use on, and in conjunction with, the specified project. None of such ideas, designs, arrangements and plans shall be used by or disclosed to any person, firm or corporation for any purpose whatsoever without the written permission of NICHOLS, MELBURG and ROSSETTO.

NICHOLS MELBURG & ROSSETTO
ARCHITECTS + ENGINEERS

300 KNOLLCREST DRIVE
REDDING, CA. 96002
(530) 222-3300 (530) 222-3538 FAX
http://www.nmrdesign.com

CONSULTANTS

tk1sc
Member of WSP
11870 Pierce Street, Suite 160
Riverside, California 92505
951.299.4160 www.tk1sc.com

Project Leader - Jerry Leonhardt
Electrical Lead - Jerry Leonhardt
WSP Job #: B2305166.000

LICENSE STAMPS

REGISTERED PROFESSIONAL ENGINEER
RICHMOND W. SHAFFER
No. E15610
12/31/2025
ELECTRICAL
STATE OF CALIFORNIA

PROJECT NAME

TEHAMA COUNTY CORNING VETERAN'S HALL

1620 SOLANO ST.
CORNING, CA

SHEET TITLE

MISCELLANEOUS DETAILS

DRAWING STATUS

CONSTRUCTION DOCUMENTS

REVISIONS

Sym.	Description	Date

Drawn By	
Date Issued	2/13/2025
Scale	-
Project No.	21-6497

SHEET No.

E5.1

Login Name: USGL\70096
Plot Date: February 13, 2025 - 9:37 am
File Name: P:\2023\B2305166\000 Corning Veterans Hall Remod\Drawings and Models\CAD\Electrical\E5-1.dwg
XREFS: x-PVL; Title Block

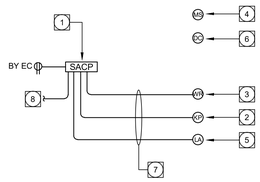

SECURITY ALARM SYSTEM KEY NOTES:

1. SECURITY ALARM TERMINAL CABINET PER SPECIFICAITONS COMPLETE WITH LOCK KIT, TERMINAL STRIPS, MODULES, POWER SUPPLY(S), POPITS, BATTERIES, RJ31X JACK FOR ANALOG DIAL TONE CONNECTION, AND ALL OTHER COMPONENTS REQUIRED FOR A COMPLETE AND FULLY FUNCTIONAL SYSTEM.
2. SECURITY ALARM KEYPAD COMPLETE, PER SPECIFICATIONS. QUANTITY AND LOCATIONS PER PLAN DRAWINGS.
3. WALL-MOUNTED COMMERCIAL WIRELESS RECEIVER PER SPECIFICATIONS. QUANTITY AND LOCATIONS PER PLAN DRAWINGS.
4. WIRELESS WALL-MOUNTED PIR MOTION SENSOR PER SPECIFICATIONS. QUANTITY AND LOCATIONS PER PLAN DRAWINGS.
5. SURFACE-MOUNTED LOCAL ALARM HORN PER SPECIFICATIONS. QUANTITY AND LOCATIONS PER PLAN DRAWINGS.
6. WIRELESS SURFACE-MOUNTED DOOR CONTACTS (POSITION SENSOR) AND TRANSMITTER, PER SPECIFICATIONS. QUANTITY AND LOCATIONS PER PLAN DRAWINGS.
7. CONCEALED DEVICE CABLING PER MANUFACTURER'S RECOMMENDATIONS AND SPECIFICATIONS. PROVIDE NON-METALLIC SURFACE MOUNTED WIREMOLD-TYPE RACEWAY IN OPEN CEILING AND HARD LID AREAS.
8. PROVIDE NEW 4-PAIR UTP CAT-6 CABLE AND EXTEND EXISTING ANALOG TELEPHONE LINE TO PANEL. CONNECT TO DIALER'S RJ31X MODULE. COORDINATE CONNECTIVITY WITH OWNER IN THE FIELD. INCLUDE ALL COSTS IN BASE BID.

SECURITY ALARM SYSTEM GENERAL NOTES:

1. CONTRACTOR'S WORK INCLUDES TO PROVIDE ALL COMPONENTS, SOFTWARE, PROGRAMMING, CONFIGURATIONS, CONTROL PANEL, ZONE EXPANDERS, MODULES, TERMINAL CABINETS, BATTERIES, POWER SUPPLIES, DEVICES, MATERIAL, WIRING, CONDUIT / SLEEVE FIRE STOPPING, LABOR, EQUIPMENT, SUPPLIES, LABELS, TESTING ACCESSORIES AND TRAINING REQUIRED FOR A COMPLETE AND FULLY FUNCTIONING SECURITY DETECTION ALARM SYSTEM.
2. ALL CABLING SHALL BE BY MANUFACTURERS REQUIREMENTS UNLESS OTHERWISE NOTED IN DISTRICT SPECIFICATIONS.
3. ALL EXTERIOR / UNDERGROUND CABLE TO BE WET LOCATION RATED. ALL CABLING SHALL BE RATED FOR THE ENVIRONMENT FOR WHICH IT IS INSTALLED, PER CALIFORNIA ELECTRICAL CODE AND TIA-568-C.
4. PROVIDE ZONE EXPANDERS AS REQUIRED FOR MOST EFFICIENT AND ECONOMICAL DISTRIBUTION AND EXPANSION (ONE POINT / ZONE PER MOTION DETECTOR AND DOOR CONTACT).
5. ALL DEVICES ARE TO BE WIRED INDEPENDENTLY, NO LOOPS FOR DATA, DEVICE OR POWER.
6. MOTION DETECTORS SHALL BE WIRELESS AND INCLUDE ALL TRANSMITTERS, MOUNTS, BATTERIES, ETCETERA, AND BE AIMED FOR BEST COVERAGE AS INDICATED ON THE PLAN DRAWINGS.
7. SURFACE MOUNTED DOOR CONTACTS SHALL BE WIRELESS AND INCLUDE ALL TRANSMITTERS, MOUNTS, BATTERIES, ETCETERA.
8. COORDINATE SYSTEM CONTROL PANEL LOCATION IN FIELD WITH OWNER AND ELECTRICAL CONTRACTOR PRIOR TO ROUGH-IN.
9. LABEL ALL CABLES WITH ROOM NAME / LOCATION ON PLASTIC COATED CABLE MARKERS WRAPPED AROUND CABLE AT EACH END AND IN EACH TERMINAL CABINET.
10. CONTRACTOR SHALL PROGRAM ALL ZONES ACCORDING TO OWNER'S DIRECTIONS. SEE OWNER'S PROJECT MANAGER FOR IDENTIFICATION OF ALL ZONE AREAS.
11. PROVIDE CONDUIT OR SURFACE MOUNTED NON-METALLIC RACEWAY IN ALL HARD-LID, OPEN-CEILING, AND NON-ACCESSIBLE CEILING LOCATIONS.
12. REFERENCE SPECIFICATIONS FOR ADDITIONAL INFORMATION AND REQUIREMENTS.
13. REFERENCE NEC ARTICLE 725 FOR ADDITIONAL INFORMATION FOR UNLISTED (OSP) CABLING ENTERING A BUILDING. RELATED NEC ARTICLES 770, 800, AND 820.

SECURITY ALARM SYSTEM DIAGRAM (1)

SCALE: N.T.S.

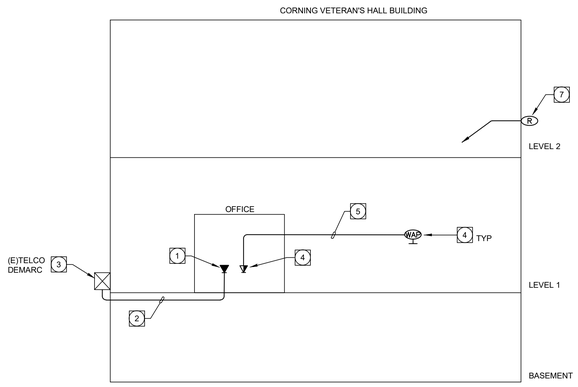

LAN-PHONE SYSTEM BLOCK DIAGRAM KEY NOTES:

1. TELEPHONE OUTLET. MOUNT +18" AFF. QUANTITY AND LOCATIONS PER PLAN DRAWINGS. SEE FACEPLATE DETAILS FOR MORE INFORMATION. TERMINATE TWO EXISTING DIAL TONE LINES INTO ONE RJ12C JACK. CONFIRM TELEPHONE'S PIN OUT REQUIREMENTS WITH OWNER PRIOR TO TERMINATING CABLE INTO JACK.
2. CATEGORY-6 UTP 4-PAIR PHONE CABLE(S). TERMINATE AT TELEPHONE OUTLET, AND ON THE EXISTING TELEPHONE COMPANY'S DEMARCATION (PROTECTOR) LOCATED ON THE BUILDING EXTERIOR.
3. EXISTING TELEPHONE COMPANY'S DEMARCATION (PROTECTOR) LOCATED ON THE BUILDING EXTERIOR. EXTEND THE TWO EXISTING DIAL TONE LINES TO THE NEW PHONE JACK IN THE OFFICE.
4. SURFACE WALL MOUNTED WIRELESS ACCESS POINT OUTLET. QUANTITY, LOCATIONS, AND MOUNTING HEIGHT PER PLAN DRAWINGS. PROVIDE OUTLET ABOVE ACCESSIBLE CEILING WHERE INDICATED ON PLANS. REFER TO FACEPLATE DETAILS FOR MORE INFORMATION. RESERVED FOR FUTURE WIRELESS ACCESS POINT EQUIPMENT BY OWNER.
5. CONDUIT AND CABLE(S). REFER TO FACEPLATE DETAIL FOR CABLE REQUIREMENTS. TERMINATE CABLES AT WAP OUTLET AND AT WAP CONSOLIDATION OUTLET.
6. WAP CONSOLIDATION OUTLET. MOUNT +18" AFF. LOCATION PER PLAN DRAWINGS. SEE FACEPLATE DETAILS FOR MORE INFORMATION.
7. EXISTING WIRELESS RECEIVER DEVICE. REINSTALL AND RECONNECT AFTER DEMOLITION PHASE. REROUTE EXISTING CABLE AND RECONNECT, OR PROVIDE NEW CABLE IF EXISTING CABLE IS TOO SHORT. CONFIRM LOCATION OF EXISTING RECEIVER AND FINAL TERMINATION POINT IN FIELD PRIOR TO COMMENCING WORK.

TELEPHONE SYSTEM GENERAL INSTALLATION NOTES:

1. DRAWINGS AND LAYOUTS ARE PRIMARILY DIAGRAMMATIC IN NATURE. CONTRACTOR IS RESPONSIBLE FOR FINAL FOOTAGES AND EXACT LOCATIONS.
2. REFERENCE SPECIFICATIONS AND ALL DRAWINGS FOR ADDITIONAL INFORMATION AND REQUIREMENTS.
3. CONTRACTOR SHALL PROVIDE WALL MOUNT DATA CABINET, PATCH PANELS, CONNECTORS, OUTLETS, PATCH CORDS, GROUNDING CONNECTIONS, AND ALL OTHER COMPONENTS NECESSARY FOR A COMPLETE AND OPERABLE STRUCTURED CABLING SYSTEM.
4. ALL COMPUTER AND TELEPHONE SYSTEM ACTIVE ELECTRONICS INCLUDING BUT NOT LIMITED TO COMPUTERS, TELEPHONE SETS, WIRELESS ACCESS POINTS, ROUTERS, AND UPS SHALL BE OWNER-FURNISHED OWNER-INSTALLED UNLESS OTHERWISE NOTED ON THE PLAN DRAWINGS AND SPECIFICATIONS.
5. EXTEND TWO EXISTING DIAL TONE LINES FROM TELCO SERVICE PROVIDER DEMARCATION EQUIPMENT TO TELEPHONE OUTLET(S), AND AS NOTED ON THE PLAN DRAWINGS. CONTRACTOR SHALL COORDINATE WITH TELCO COMPANY TECHNICIAN AND OWNER IN FIELD. INCLUDE ALL COSTS IN BASE BID.
6. REMOVE DURING DEMO PHASE, AND THEN RECONNECT EXISTING WIRELESS RECEIVER LOCATED AT 2ND FLOOR EXTERIOR WINDOW. CONTRACTOR SHALL PROVIDE ANY ADDITIONAL CABLING OR COMPONENTS/EQUIPMENT REQUIRED TO RECONNECT THIS EXISTING DEVICE WITH THE OWNER'S COMPUTER. CONTRACTOR SHALL EXAMINE THE EXISTING EQUIPMENT IN THE FIELD PRIOR TO START OF DEMOLITION PHASE AND CONFIRM ALL REQUIREMENTS. INCLUDE ALL COSTS IN BASE BID.
7. VERIFY ALL QUANTITIES AND LOCATIONS WITH PLAN DRAWINGS AND SPECIFICATIONS.
8. CONTRACTOR SHALL COORDINATE ALL DEMOLITION WORK WITH OTHER TRADES PRIOR TO COMMENCING WORK.
9. ALL CABLING SHALL BE INSTALLED CONCEALED ABOVE ACCESSIBLE CEILINGS, AND INSIDE WALLS, UNLESS OTHERWISE NOTED.
10. ALL CABLES SHALL BE RATED FOR THE ENVIRONMENT IN WHICH THEY ARE INSTALLED, PER NEC CODE.
11. CABLES ROUTED IN CRAWL SPACES SHALL BE SECURED TO STRUCTURE AT 5 FEET MAXIMUM INTERVALS.

TELEPHONE SYSTEM DIAGRAM (2)

SCALE: N.T.S.

Copyright © 2025

All ideas, designs, arrangements and plans indicated or represented by this drawing are owned by, and the property of, NICHOLS, MELBURG and ROSSETTO and were created, evolved and developed for use on, and in conjunction with, the specified project. None of such ideas, designs, arrangements and plans shall be used by or disclosed to any person, firm or corporation for any purpose whatsoever without the written permission of NICHOLS, MELBURG and ROSSETTO.

NICHOLS MELBURG & ROSSETTO
ARCHITECTS + ENGINEERS

300 KNOLLCREST DRIVE
REDDING, CA. 96002
(530) 222-3300 (530) 222-3538 FAX
http://www.nmrdesign.com

CONSULTANTS

tk1sc
Member of WSP
11870 Pierce Street, Suite 160
Riverside, California 92505
951.299.4160 www.tk1sc.com

Project Leader - Jerry Leonhardt
Technology Lead - Joe Marotta
WSP Job #: B2305166.000

LICENSE STAMPS

REGISTERED PROFESSIONAL ENGINEER
RAYMOND W. GRAFF
No. E15610
12/31/2025
ELECTRICAL
STATE OF CALIFORNIA

PROJECT NAME

TEHAMA COUNTY CORNING VETERAN'S HALL

1620 SOLANO ST.
CORNING, CA

SHEET TITLE

TECHNOLOGY DIAGRAMS

DRAWING STATUS

CONSTRUCTION DOCUMENTS

REVISIONS

Sym.	Description	Date

Drawn By	
Date Issued	2/13/2025
Scale	-
Project No.	21-6497

SHEET No.

E5.2

Logo Name: USGLTR0996
Plot Date: February 13, 2025 - 9:08 am
File Name: P:\2021\B2305166\000 Corning Veterans Hall Remod\Drawings and Models\CAD\Electrical\E5-2.dwg
NMR/B - 4-PH-L-Title Block

FACEPLATE DETAIL KEY NOTES:

1. PROVIDE (1) CAT-6, 4 PAIR UTP CABLE(S). TERMINATE STATION END(S) IN STATION CONNECTOR(S) PER DETAILS.
2. PROVIDE DATA CAT-6, 8P8C STATION CONNECTOR. COLOR OF CONNECTOR SHALL BE RED FOR WAP CONNECTIONS, AND BLUE FOR TELCO LINE CONNECTIONS.
3. PROVIDE FACEPLATE. FACEPLATE MATERIAL AND FINISH SHALL MATCH ADJACENT/NEARBY POWER FACEPLATES.
4. PROVIDE FACEPLATE LABELING PER SPECIFICATIONS. SEE SPECIFICATIONS FOR ALL OTHER LABELING REQUIREMENTS.
5. BLANK INSERT. ALL UNUSED OPENINGS SHALL BE COVERED WITH A BLANK INSERT MATCHING THE COLOR OF THE FACEPLATE.
6. PROVIDE SURFACE-MOUNT, PLENUM-RATED TWO-PORT HOUSING (LEVITON 41089-2WP OR EQUAL). MOUNT TO CONTRACTOR-PROVIDED IN-CEILING BRACKET WITH MULTI-FUNCTION CLIP FOR ROD OR HANGER WIRE MOUNTING (LEVITON 49223-CBC OR EQUAL). PROVIDE 10FT SLACK LOOP ON J-HOOK MOUNTED ABOVE HOUSINGS. MOUNT HOUSING 8-12 INCHES ABOVE ACCESSIBLE CEILING TILE.
7. INSTALL DEDICATED SUSPENDED CEILING WIRE / HANGAR OR SUPPORT ROD / ROD HANGAR DIRECTLY TO STRUCTURAL CEILING ABOVE TO SUPPORT WAP SURFACE MOUNT HOUSING.
8. PROVIDE J-HOOK ABOVE ACCESSIBLE CEILING PER SPECIFICATIONS. J-HOOKS SHALL BE SPACED AT A MAXIMUM OF 5 FEET APART.
9. PROVIDE (1) CAT-6, 4 PAIR UTP CABLE(S) TO EXTERIOR TELCO DEMARCATION POINT OR PROTECTOR. TERMINATE 2 PAIRS PER JACK (JACK #1: WHITE/BLUE AND WHITE/ORANGE, JACK #2: WHITE/GREEN AND WHITE/BROWN), UNLESS OTHERWISE DIRECTED BY TELCO INSTALLER OR OWNER. COORDINATE FINAL JACK WIRING REQUIREMENTS WITH OWNER IN FIELD.

WHERE THE FOLLOWING SYMBOLS ARE INDICATED ON THE ELECTRICAL DRAWINGS, ARCHITECTURAL DRAWINGS AND/OR STRUCTURED CABLING SYSTEM DRAWINGS:

THE FOLLOWING SHALL BE PROVIDED, AS DEPICTED IN THE FOLLOWING DIAGRAMMATIC CONNECTIVITY DETAIL.

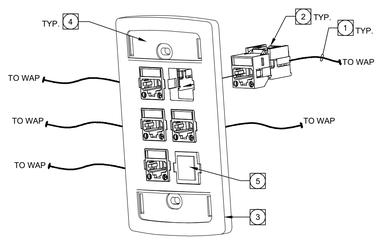

DATA/WAP CONSOLITATION OUTLET (4)
N.T.S.

WHERE THE FOLLOWING SYMBOLS ARE INDICATED ON THE ELECTRICAL DRAWINGS, ARCHITECTURAL DRAWINGS AND/OR STRUCTURED CABLING SYSTEM DRAWINGS:

TEL

THE FOLLOWING SHALL BE PROVIDED, AS DEPICTED IN THE FOLLOWING DIAGRAMMATIC CONNECTIVITY DETAIL.

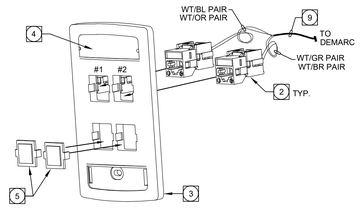

TELEPHONE DIALTONE LINE OUTLET (1)
N.T.S.

WHERE THE FOLLOWING SYMBOLS ARE INDICATED ON THE ELECTRICAL DRAWINGS, ARCHITECTURAL DRAWINGS AND/OR STRUCTURED CABLING SYSTEM DRAWINGS:

WAP

THE FOLLOWING SHALL BE PROVIDED, AS DEPICTED IN THE FOLLOWING DIAGRAMMATIC CONNECTIVITY DETAIL.

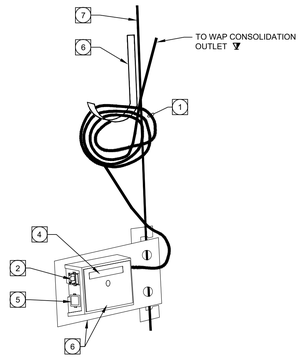

WAP DATA OUTLET ABOVE CEILING (2)
N.T.S.

WHERE THE FOLLOWING SYMBOLS ARE INDICATED ON THE ELECTRICAL DRAWINGS, ARCHITECTURAL DRAWINGS AND/OR STRUCTURED CABLING SYSTEM DRAWINGS:

WAP

THE FOLLOWING SHALL BE PROVIDED, AS DEPICTED IN THE FOLLOWING DIAGRAMMATIC CONNECTIVITY DETAIL.

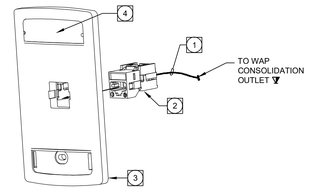

WALL DATA DEVICE FOR WAP (3)
N.T.S.

Copyright © 2025
All ideas, designs, arrangements and plans indicated or represented by this drawing are owned by, and the property of, NICHOLS, MELBURG and ROSSETTO and were created, evolved and developed for use on, and in conjunction with, the specified project. None of such ideas, designs, arrangements and plans shall be used by or disclosed to any person, firm or corporation for any purpose whatsoever without the written permission of NICHOLS, MELBURG and ROSSETTO.

NICHOLS MELBURG & ROSSETTO
ARCHITECTS + ENGINEERS
300 KNOLLCREST DRIVE
REDDING, CA. 96002
(530) 222-3300 (530) 222-3538 FAX
http://www.nmrdesign.com

CONSULTANTS

tk1sc
Member of WSP
11870 Pierce Street, Suite 160
Riverside, California 92505
951.299.4160 www.tk1sc.com
Project Leader - Jerry Leonhardt
Electrical Lead - Jerry Leonhardt
WSP Job #: B2305166.000

LICENSE STAMPS

REGISTERED PROFESSIONAL ENGINEER
RAYMOND W. GRAFF
No. E15610
12/31/2025
ELECTRICAL
STATE OF CALIFORNIA

PROJECT NAME

TEHAMA COUNTY
CORNING
VETERAN'S HALL

1820 SOLANO ST.
CORNING, CA

SHEET TITLE

TECHNOLOGY DETAILS

DRAWING STATUS

CONSTRUCTION DOCUMENTS

REVISIONS

Sym.	Description	Date

Drawn By	
Date Issued	2/13/2025
Scale	-
Project No.	21-6497

SHEET No.

E5.3

Login Name: LRGJ.770396
Plot Date: February 13, 2025 9:28 am
File Name: P:\2021\B2305166.000 Corning Veterans Hall Remod\Drawings and Models\CAD\Electrical\E5-3.dwg
PSTB: ANSI-D-CTB.pc3

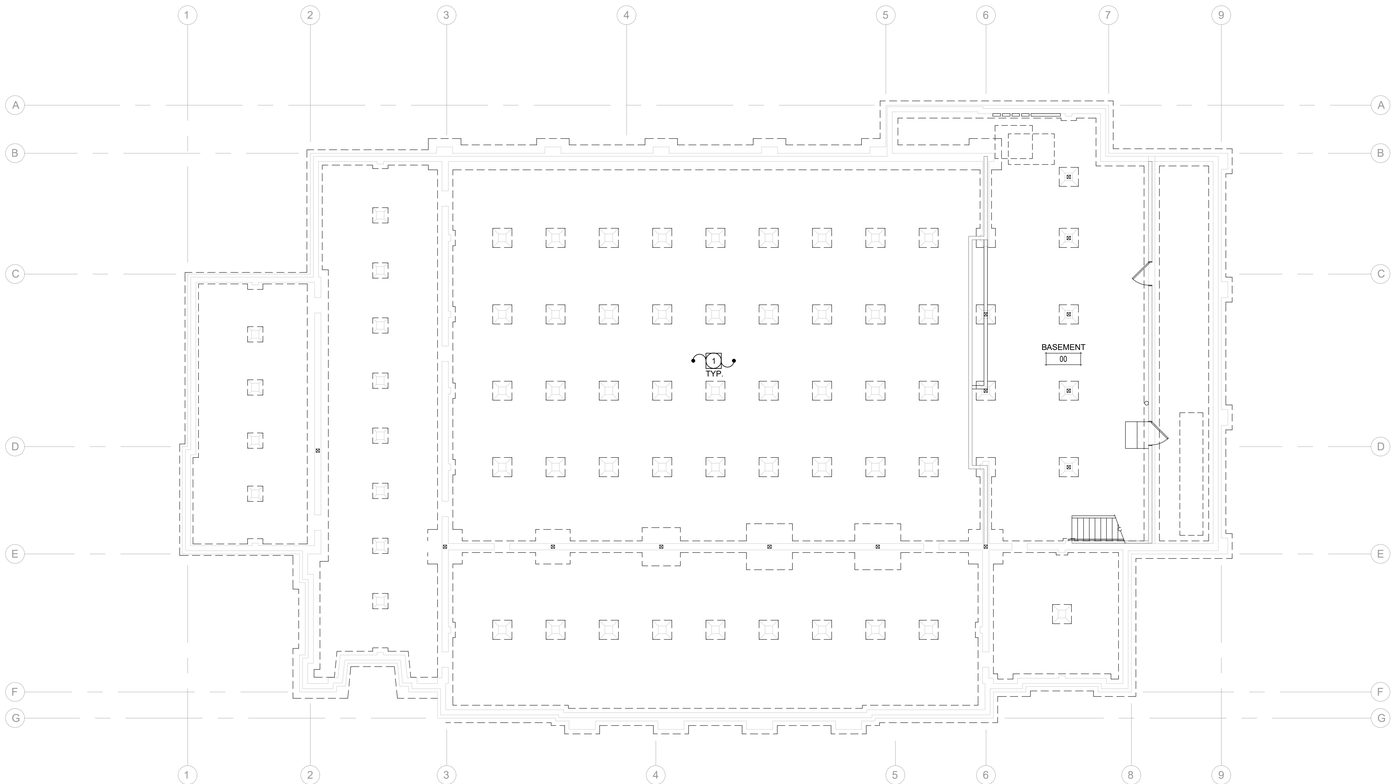

ELECTRICAL DEMOLITION PLAN - BASEMENT

SCALE: 1/8" = 1'-0"

PLAN NOTES:

1. REFER TO GENERAL DEMOLITION NOTE 14, AND ARCHITECTURAL SHEETS FOR DEMOLITION SCOPE. TYPICAL THROUGHOUT BUILDING, UNLESS OTHERWISE NOTED.

GENERAL DEMOLITION NOTES:

1. THE ELECTRICAL DRAWINGS ARE DIAGRAMMATIC ONLY. DO NOT SCALE THE ELECTRICAL DRAWINGS TO DETERMINE THE LOCATION OF EQUIPMENT OR OUTLETS. SEE ARCHITECTURAL PLANS, WHERE PROVIDED ON PROJECT, FOR EXTENT OF DEMOLITION.
2. THE EXISTING CONDITIONS SHOWN ARE FROM AVAILABLE RECORD DRAWINGS AND SHOWN FOR REFERENCE ONLY. CONTRACTOR SHALL VERIFY ACTUAL EXISTING CONDITIONS AT SITE PRIOR TO SUBMITTING BID. ALL DEMOLITION, ALTERATION, EXTENSION, RELOCATION, REHABILITATION WORK SHALL BE INCLUDED IN CONTRACT. NO ADDITIONAL ALLOWANCE OR CHANGE ORDERS WILL BE ACCEPTED.
3. CONTRACTOR IS RESPONSIBLE TO RELOCATE OR REMOVE FROM WALLS, CEILINGS, FLOOR SPACES, ETC. ANY EXISTING CONDUITS, WIRES, BOXES, FITTINGS, FIXTURES OR OTHER ELECTRICAL EQUIPMENT WHICH INTERFERES WITH PLANNED REMODEL WORK. PROVIDE CIRCUIT CONTINUATION REQUIRED FOR ALL EXISTING OUTLETS, FIXTURES, EQUIPMENT, ETC. SCHEDULED TO REMAIN.
4. NOTIFY THE ENGINEER IMMEDIATELY WHEREVER EXISTING EQUIPMENT IS ENCOUNTERED WHICH MUST BE RELOCATED DUE TO THE NEW CONSTRUCTION, OR NOT INDICATED ON "AS-BUILT" DRAWINGS OR WAS BURIED UNDERGROUND OR EMBEDDED IN STRUCTURE WALLS.
5. CAREFULLY PROTECT ALL WALLS, TRIM, FLOORS, EQUIPMENT, UTILITY LINES AND MATERIALS. WHEN WORKING ON FINISHED SURFACES, LIMIT DAMAGE TO THE SMALLER AREA IF POSSIBLE AND RESTORE TO THE ORIGINAL CONDITION ALL SURFACES WHICH ARE DAMAGED BECAUSE OF THE INSTALLATION OF THIS WORK.
6. EQUIPMENT, MATERIALS AND SUPPLIES TEMPORARILY REMOVED FOR PROTECTION SHALL BE REPLACED IN ORIGINAL LOCATIONS. ANY MATERIALS DAMAGED SHALL BE REPLACED WITH NEW MATERIALS OF LIKE KIND AND QUALITY.
7. DEMOLITION WORK SHALL BE DONE IN A MANNER WHICH WILL NOT CAUSE UNNECESSARY INCONVENIENCE OR DANGER TO USERS OF THE PREMISES AND ADJACENT SITE, AND NOT INTERFERE WITH ITS OPERATION. ANY DEMOLITION WORK TO BE PERFORMED MUST BE PLANNED IN ADVANCE.
8. DO ALL DRILLING, CUTTING, ETC. REQUIRED TO DEMOLISH ELECTRICAL WORK AS INDICATED OR PROVIDE BLANK COVER PLATE ON ALL OUTLETS EXPOSED BY REMOVAL OF FIXTURE OR DEVICES.
9. RESEAL ALL PENETRATIONS OR OPENING THROUGH WALLS, CEILING, FLOORS, ETC., TO MAINTAIN THE RATING OF STRUCTURE.
10. ALL REMOVED MATERIALS AND EQUIPMENT WHICH IS SALVAGED MATERIALS SHALL REMAIN IN THE PROPERTY OF THE OWNER. DELIVER SUCH SALVAGED MATERIALS AND EQUIPMENT ON THE PREMISES AS DIRECTED BY OWNER AND NEATLY PILE OR STORE THEM AND PROTECT FROM DAMAGED. DISPOSE OF ALL HAZARDOUS MATERIAL PER GUIDELINE OF THE STATE OF CALIFORNIA, DEPARTMENT OF HEALTH SERVICES AND OTHER AGENCIES HAVING JURISDICTION.
11. CONTRACTOR SHALL FIELD VERIFY EXISTING CONDUIT/WIRING RUNS, REUSE AS REQUIRE AND REMOVED ALL UNUSED CONDUIT/WIRING. UNUSED CONDUIT IN INACCESSIBLE LOCATIONS (WALLS TO REMAIN) CAN BE ABANDONED IN PLACE. REMOVE UNUSED WIRING.
12. CONTRACTOR TO VERIFY CIRCUIT NUMBER AND LOADS FOR ALL EXISTING EQUIPMENT PRIOR TO INSTALLATION OF NEW OR RELOCATED ELECTRICAL EQUIPMENT. REASSIGN CIRCUITS AND LOADS ACCORDINGLY. PROVIDE COMPLETE "AS BUILT" DRAWINGS AND TYPEWRITTEN DIRECTORIES FOR PANELS.
13. WHERE NECESSARY TO SHUT OFF UTILITY SERVICES OR CAUSE INTERRUPTION TO POWER OR SIGNAL SYSTEMS WHILE A BUILDING IS OCCUPIED OR THAT EFFECT ADJACENT BUILDINGS, SCHEDULE OUTAGES OR INTERRUPTIONS WITH THE OWNER, BUILDING OCCUPANTS AND/OR ADJACENT BUILDING OWNER(S) AND OCCUPANTS PRIOR TO CONDUCTING OUTAGE(S) OR INTERRUPTIONS.
14. REFER TO ARCHITECTURAL DEMOLITION DRAWING FOR DEMOLITION AREAS. THE SCOPE OF THE DEMOLITION SHALL INCLUDE ALL LABOR, EXISTING ELECTRICAL EQUIPMENT. VERIFY EXACT SCOPE PRIOR TO COMMENCING WORK. REFER TO DEMO PLAN FOR SPECIFIC AREAS NOT IN SCOPE THE SCOPE INCLUDES, BUT IS NOT LIMITED TO THE FOLLOWING:
    A. LIGHTING: CONTRACTOR TO DEMOLISH ALL EXISTING LIGHTING FIXTURES AND ASSOCIATED CONTROLS, U.O.N.
    B. POWER: CONTRACTOR TO DEMOLISH ALL EXISTING POWER, U.O.N.
    C. CONTRACTOR TO DEMOLISH ALL EXISTING ELECTRICAL SWITCHGEAR, PANELBOARDS, PULLBOXES, ETC., U.O.N.
    D. SIGNAL: CONTRACTOR TO DEMOLISH ALL EXISTING SIGNAL SYSTEMS (CLOCKS, DATA OUTLETS, TELEPHONE OUTLETS, TELEVISION OUTLETS, SPEAKERS, ETC.)
    E. FIRE ALARM: CONTRACTOR TO DEMOLISH ALL EXISTING FIRE ALARM DEVICES, U.O.N.
    F. EXTERIOR LIGHTING: CONTRACTOR SHALL DEMOLISH ALL EXISTING EXTERIOR LIGHTING FIXTURES AND ASSOCIATED CONTROLS, U.O.N.
    G. EXTERIOR POWER, SIGNAL AND FIRE ALARM: CONTRACTOR SHALL DEMOLISH ALL EXISTING EXTERIOR POWER, SIGNAL AND FIRE ALARM DEVICES, U.O.N.
15. WHERE NEW PARTITIONS OR OTHER CONSTRUCTION WILL COVER EXISTING, REMAINING OUTLETS MAKING THEM INACCESSIBLE, RELOCATE THESE OUTLETS AS REQUIRED, OR MAKE OTHER PROVISIONS SO THAT THE OUTLETS WILL REMAIN ACCESSIBLE AND OPERATIONAL.
16. WHERE EXISTING WALLS AND CEILINGS ARE TO REMAIN, PROVIDE BLANK COVER PLATES FOR OUTLETS WHERE EQUIPMENT OR DEVICES ARE REMOVED UNDER THIS CONTRACT. PRIME BLANK PLATES AND PAINT TO MATCH SURROUNDING AREA.
17. WHERE FIXTURES, EQUIPMENT, DEVICES, ETC. ARE SPECIFIED BY THE CONTRACT DOCUMENTS FOR REMOVAL, THE CONTRACTOR SHALL REMOVE ALL CIRCUIT CONDUCTORS/CABLING BACK TO THE NEAREST REMAINING JUNCTION BOX AND/OR POINT OF TERMINATION.
18. RELOCATE EXISTING CONDUITS AND/OR CONDUCTORS/CABLING ROUTING THROUGH AREAS WHERE NEW/REMOVED WALLS ARE SPECIFIED.
19. RELOCATION AND/OR REMOVAL OF EXISTING EQUIPMENT, DEVICES, OUTLETS BOXES, CONDUIT, WIRING, ETC. MAY AFFECT THE OPERATION OF EXISTING, REMAINING ELECTRICAL EQUIPMENT/DEVICES, THE CONTRACTOR SHALL PROVIDE ADDITIONAL MATERIALS AS REQUIRED TO MAINTAIN AND/OR RESTORE CONTINUITY OF SERVICES TO EXISTING REMAINING ELECTRICAL/DEVICES.
20. DISCONNECT ABANDONED CIRCUITS AT EXISTING PANEL BOARDS AND REMOVE WIRE TO LAST REMAINING DEVICES. LABEL ALL ABANDONED CIRCUIT BREAKERS "SPARE".

Copyright © 2025
All ideas, designs, arrangements and plans indicated or represented by this drawing are owned by, and the property of, NICHOLS, MELBURG and ROSSETTO and were created, evolved and developed for use on, and in conjunction with, the specified project. None of such ideas, designs, arrangements and plans shall be used by or disclosed to any person, firm or corporation for any purpose whatsoever without the written permission of NICHOLS, MELBURG and ROSSETTO.

NICHOLS MELBURG & ROSSETTO
ARCHITECTS + ENGINEERS
300 KNOLLCREST DRIVE
REDDING, CA. 96002
(530) 222-3300 (530) 222-3538 FAX
http://www.nmrdesign.com

CONSULTANTS

tk1sc
Member of WSP
11870 Pierce Street, Suite 160
Riverside, California 92505
951.299.4160 www.tk1sc.com
Project Leader - Jerry Leonhardt
Electrical Lead - Jerry Leonhardt
WSP Job #: B2305166.000

LICENSE STAMPS

REGISTERED PROFESSIONAL ENGINEER
RAYMOND W. GRAFF
No. E15610
12/31/2025
ELECTRICAL
STATE OF CALIFORNIA

PROJECT NAME

TEHAMA COUNTY
CORNING
VETERAN'S HALL

1620 SOLANO ST.
CORNING, CA

SHEET TITLE
ELECTRICAL DEMOLITION PLAN - BASEMENT

DRAWING STATUS
CONSTRUCTION DOCUMENTS

REVISIONS

Sym.	Description	Date

Drawn By	
Date Issued	2/13/2025
Scale	1/8" = 1'-0"
Project No.	21-6497

SHEET No.
ED2.1

Login Name: LEGI_70366
Plot Date: February 13, 2025 - 9:59 am
File Name: P:\2021\B2305166\000 Corning Veterans Hall Remod\Drawings and Models\CAD\Electrical\ED2-1.dwg
XREFS: X-CVH_TB BMH X-CVH-FD X-CVH-GRID

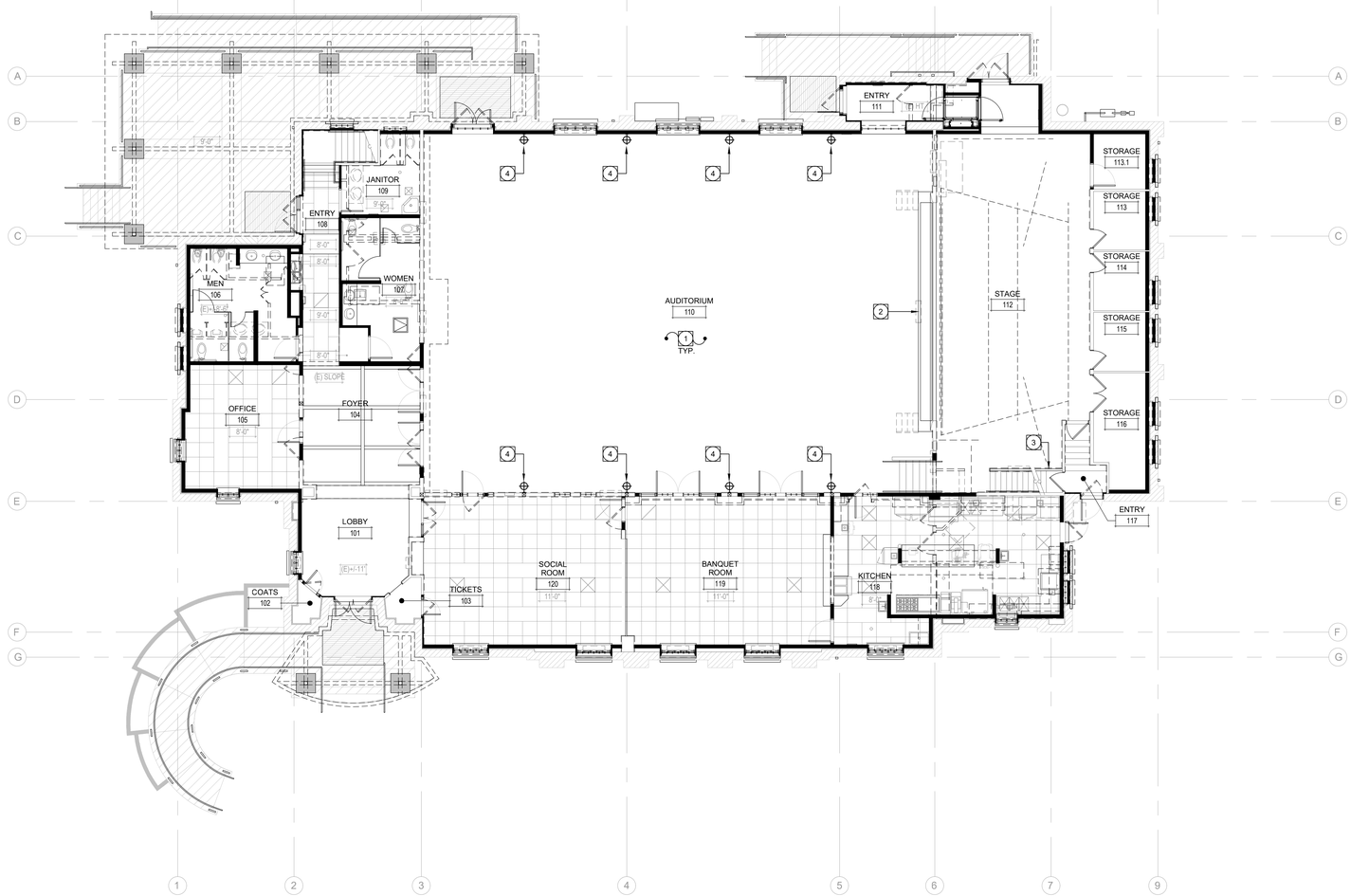

ELECTRICAL DEMOLITION PLAN - LEVEL 1

SCALE: 1/8" = 1'-0"

PLAN NOTES:

1. REFER TO GENERAL DEMOLITION NOTE 14, AND ARCHITECTURAL SHEETS FOR DEMOLITION SCOPE. TYPICAL THROUGHOUT BUILDING, UNLESS OTHERWISE NOTED
2. EXISTING STAGE LIGHTING AT EDGE OF STAGE TO REMAIN. DISCONNECT FROM EXISTING PANEL AND PROTECT EXISTING CONDUIT, WIRING, AND CONTROLS IN PLACE FOR RECONNECTION TO NEW PANEL.
3. EXISTING ELECTRIC WATER HEATER TO REMAIN. DISCONNECT FROM EXISTING PANEL AND PROTECT EXISTING CONDUIT, WIRING, AND CONTROLS IN PLACE FOR RECONNECTION TO NEW PANEL.
4. EXISTING DECORATIVE WALL SCONCE TO BE DISCONNECTED AND SET ASIDE FOR REINSTALLATION AT ORIGINAL LOCATION.

GENERAL DEMOLITION NOTES:

1. THE ELECTRICAL DRAWINGS ARE DIAGRAMMATIC ONLY. DO NOT SCALE THE ELECTRICAL DRAWINGS TO DETERMINE THE LOCATION OF EQUIPMENT OR OUTLETS. SEE ARCHITECTURAL PLANS, WHERE PROVIDED ON PROJECT, FOR EXTENT OF DEMOLITION.
2. THE EXISTING CONDITIONS SHOWN ARE FROM AVAILABLE RECORD DRAWINGS AND SHOWN FOR REFERENCE ONLY. CONTRACTOR SHALL VERIFY ACTUAL EXISTING CONDITIONS AT SITE PRIOR TO SUBMITTING BID. ALL DEMOLITION, ALTERATION, EXTENSION, RELOCATION, REHABILITATION WORK SHALL BE INCLUDED IN CONTRACT. NO ADDITIONAL ALLOWANCE OR CHANGE ORDERS WILL BE ACCEPTED.
3. CONTRACTOR IS RESPONSIBLE TO RELOCATE OR REMOVE FROM WALLS, CEILINGS, FLOOR SPACES, ETC. ANY EXISTING CONDUITS, WIRES, BOXES, FITTINGS, FIXTURES OR OTHER ELECTRICAL EQUIPMENT WHICH INTERFERES WITH PLANNED REMODEL WORK. PROVIDE CIRCUIT CONTINUATION REQUIRED FOR ALL EXISTING OUTLETS, FIXTURES, EQUIPMENT, ETC. SCHEDULED TO REMAIN.
4. NOTIFY THE ENGINEER IMMEDIATELY WHEREVER EXISTING EQUIPMENT IS ENCOUNTERED WHICH MUST BE RELOCATED DUE TO THE NEW CONSTRUCTION, OR NOT INDICATED ON "AS-BUILT" DRAWINGS OR WAS BURIED UNDERGROUND OR EMBEDDED IN STRUCTURE WALLS.
5. CAREFULLY PROTECT ALL WALLS, TRIM, FLOORS, EQUIPMENT, UTILITY LINES AND OTHER PROPERTY ADJACENT TO PERFORMING WORK. LIMIT DAMAGE TO THE SMALLER AREA IF POSSIBLE AND RESTORE TO THE ORIGINAL CONDITION ALL SURFACES WHICH ARE DAMAGED BECAUSE OF THE INSTALLATION OF THIS WORK.
6. EQUIPMENT, MATERIALS AND SUPPLIES TEMPORARILY REMOVED FOR PROTECTION SHALL BE REPLACED IN ORIGINAL LOCATIONS. ANY MATERIALS DAMAGED SHALL BE REPLACED WITH NEW MATERIALS OF LIKE KIND AND QUALITY.
7. DEMOLITION WORK SHALL BE DONE IN A MANNER WHICH WILL NOT CAUSE UNNECESSARY INCONVENIENCE OR DANGER TO USERS OF THE PREMISES AND ADJACENT SITE, AND NOT INTERFERE WITH ITS OPERATION. ANY DEMOLITION WORK TO BE PERFORMED MUST BE PLANNED IN ADVANCE.
8. DO ALL DRILLING, CUTTING, ETC. REQUIRED TO DEMOLISH ELECTRICAL WORK AS INDICATED OR PROVIDE BLANK COVER PLATE ON ALL OUTLETS EXPOSED BY REMOVAL OF FIXTURE OR DEVICES.
9. RESEAL ALL PENETRATIONS OR OPENING THROUGH WALLS, CEILING, FLOORS, ETC., TO MAINTAIN THE RATING OF STRUCTURE.
10. ALL REMOVED MATERIALS AND EQUIPMENT WHICH IS SALVAGED MATERIALS SHALL REMAIN IN THE PROPERTY OF THE OWNER. DELIVER SUCH SALVAGED MATERIALS AND EQUIPMENT ON THE PREMISES AS DIRECTED BY OWNER AND NEATLY PILE OR STORE THEM AND PROTECT FROM DAMAGED. DISPOSE OF ALL HAZARDOUS MATERIAL PER GUIDELINE OF THE STATE OF CALIFORNIA, DEPARTMENT OF HEALTH SERVICES AND OTHER AGENCIES HAVING JURISDICTION.
11. CONTRACTOR SHALL FIELD VERIFY EXISTING CONDUIT/WIRING RUNS. REUSE AS REQUIRE AND REMOVED ALL UNUSED CONDUIT/WIRING. UNUSED CONDUIT IN INACCESSIBLE LOCATIONS (WALLS TO REMAIN) CAN BE ABANDONED IN PLACE. REMOVE UNUSED WIRING.
12. CONTRACTOR TO VERIFY CIRCUIT NUMBER AND LOADS FOR ALL EXISTING EQUIPMENT PRIOR TO INSTALLATION OF NEW OR RELOCATED ELECTRICAL EQUIPMENT. REASSIGN CIRCUITS AND LOADS ACCORDINGLY. PROVIDE COMPLETE "AS BUILT" DRAWINGS AND TYPEWRITTEN DIRECTORIES FOR PANELS.
13. WHERE NECESSARY TO SHUT OFF UTILITY SERVICES OR CAUSE INTERRIPTION TO POWER OR SIGNAL SYSTEMS WHILE A BUILDING IS OCCUPIED OR THAT EFFECT ADJACENT BUILDINGS, SCHEDULE OUTAGES OR INTERRUPTIONS WITH THE OWNER, BUILDING OCCUPANTS AND/OR ADJACENT BUILDING OWNER(S) AND OCCUPANTS PRIOR TO CONDUCTING OUTAGES(S) OR INTERRUPTIONS.
14. REFER TO ARCHITECTURAL DEMOLITION DRAWING FOR DEMOLITION AREAS. THE SCOPE OF THE DEMOLITION SHALL INCLUDE ALL LABOR, EXISTING ELECTRICAL EQUIPMENT. VERIFY EXACT SCOPE PRIOR TO COMMENCING WORK. REFER TO DEMO PLAN FOR SPECIFIC AREAS NOT IN SCOPE. THE SCOPE INCLUDES, BUT IS NOT LIMITED TO THE FOLLOWING:
    - A. LIGHTING: CONTRACTOR TO DEMOLISH ALL EXISTING LIGHTING FIXTURES AND ASSOCIATED CONTROLS, U.O.N.
    - B. POWER: CONTRACTOR TO DEMOLISH ALL EXISTING POWER, U.O.N.
    - C. CONTRACTOR TO DEMOLISH ALL EXISTING ELECTRICAL SWITCHGEAR, PANELBOARDS, PULLBOXES, ETC., U.O.N.
    - D. SIGNAL: CONTRACTOR TO DEMOLISH ALL EXISTING SIGNAL SYSTEMS (CLOCKS, DATA OUTLETS, TELEPHONE OUTLETS, TELEVISION OUTLETS, SPEAKERS, ETC.)
    - E. FIRE ALARM: CONTRACTOR TO DEMOLISH ALL EXISTING FIRE ALARM DEVICES, U.O.N.
    - F. EXTERIOR LIGHTING: CONTRACTOR SHALL DEMOLISH ALL EXISTING EXTERIOR LIGHTING FIXTURES AND ASSOCIATED CONTROLS, U.O.N.
    - G. EXTERIOR POWER, SIGNAL AND FIRE ALARM: CONTRACTOR SHALL DEMOLISH ALL EXISTING EXTERIOR POWER, SIGNAL AND FIRE ALARM DEVICES, U.O.N.
15. WHERE NEW PARTITIONS OR OTHER CONSTRUCTION WILL COVER EXISTING, REMAINING OUTLETS MAKING THEM INACCESSIBLE, RELOCATE THESE OUTLETS AS REQUIRED, OR MAKE OTHER PROVISIONS SO THAT THE OUTLETS WILL REMAIN ACCESSIBLE AND OPERATIONAL.
16. WHERE EXISTING WALLS AND CEILINGS ARE TO REMAIN, PROVIDE BLANK COVER PLATES FOR OUTLETS WHERE EQUIPMENT OR DEVICES ARE REMOVED UNDER THIS CONTRACT. PRIME BLANK PLATES AND PAINT TO MATCH SURROUNDING AREA.
17. WHERE FIXTURES, EQUIPMENT, DEVICES, ETC. ARE SPECIFIED BY THE CONTRACT DOCUMENTS FOR REMOVAL, THE CONTRACTOR SHALL REMOVE ALL CIRCUIT CONDUCTORS/CABLING BACK TO THE NEAREST REMAINING JUNCTION BOX AND/OR POINT OF TERMINATION.
18. RELOCATE EXISTING CONDUITS AND/OR CONDUCTORS/CABLING ROUTING THROUGH AREAS WHERE NEW/REMOVED WALLS ARE SPECIFIED.
19. RELOCATION AND/OR REMOVAL OF EXISTING EQUIPMENT, DEVICES, OUTLETS BOXES, CONDUIT, WIRING, ETC. MAY AFFECT THE OPERATION OF EXISTING, REMAINING ELECTRICAL EQUIPMENT/DEVICES. THE CONTRACTOR SHALL MAKE ALTERATIONS TO EXISTING, REMAINING ELECTRICAL EQUIPMENT/DEVICES TO RESTORE CONTINUITY OF SERVICES TO EXISTING REMAINING ELECTRICAL/DEVICES.
20. DISCONNECT ABANDONED CIRCUITS AT EXISTING PANEL BOARDS AND REMOVE WIRE TO LAST REMAINING DEVICES. LABEL ALL ABANDONED CIRCUIT BREAKERS "SPARE".

Copyright © 2025

All ideas, designs, arrangements and plans indicated or represented by this drawing are owned by, and the property of, NICHOLS, MELBURG and ROSSETTO and were created, evolved and developed for use on, and in conjunction with, the specified project. None of such ideas, designs, arrangements and plans shall be used by or disclosed to any person, firm or corporation for any purpose whatsoever without the written permission of NICHOLS, MELBURG and ROSSETTO.

NICHOLS MELBURG & ROSSETTO
ARCHITECTS + ENGINEERS
300 KNOLLCREST DRIVE
REDDING, CA 96002
(530) 222-3300 (530) 222-3538 FAX
http://www.nmrdesign.com

CONSULTANTS

tk1sc
Member of WSP
11870 Pierce Street, Suite 160
Riverside, California 92505
951.299.4160 www.tk1sc.com
Project Leader - Jerry Leonhardt
Electrical Lead - Jerry Leonhardt
WSP Job #: B2305166.000

LICENSE STAMPS

REGISTERED PROFESSIONAL ENGINEER
RAYMOND W. GRAFF
No. E15610
12/31/2025
ELECTRICAL
STATE OF CALIFORNIA

PROJECT NAME

TEHAMA COUNTY
CORNING
VETERAN'S HALL

1620 SOLANO ST.
CORNING, CA

SHEET TITLE

ELECTRICAL DEMOLITION PLAN - LEVEL 1

DRAWING STATUS

CONSTRUCTION DOCUMENTS

REVISIONS

Sym.	Description	Date

Drawn By	
Date Issued	2/13/2025
Scale	1/8" = 1'-0"
Project No.	21-6497

SHEET No.

ED2.2

Login Name: LRSJ.770366
Plot Date: February 13, 2025 - 9:40 am
File Name: P:\2021\21-6497\00 Corning Veterans Hall Remod\Drawings and Models\CAD\Electrical\ED2-2.dwg
PSNFS: X:\CAD_LIB\BLOCK LIBRARY\ANSI\ANSI-D\NMR-D.PS

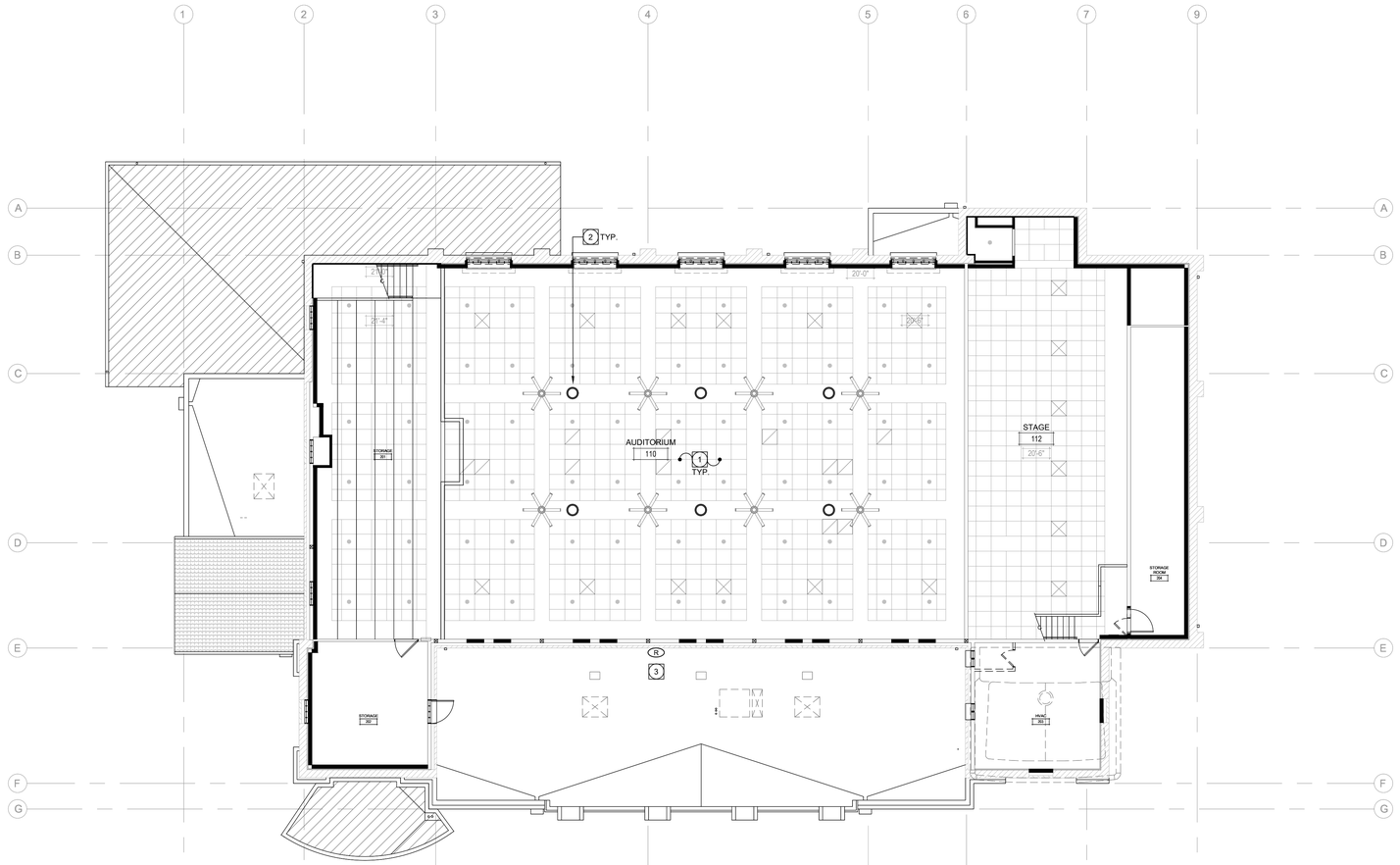

ELECTRICAL DEMOLITION PLAN - LEVEL 2

SCALE: 1/8" = 1'-0"

PLAN NOTES:

1. REFER TO GENERAL DEMOLITION NOTE 14, AND ARCHITECTURAL SHEETS FOR DEMOLITION SCOPE. TYPICAL THROUGHOUT BUILDING, UNLESS OTHERWISE NOTED.

2. EXISTING DECORATIVE CHAIN HUNG FIXTURE TO BE DISCONNECTED AND SET ASIDE FOR REINSTALLATION IN NEW CEILING.

3. EXISTING WIRELESS RECEIVER DISH TO REMAIN. REMOVE AS REQUIRED FOR DEMO WORK AND REINSTALL DISH AND ALL WIRING DURING NEW CONSTRUCTION. PROVIDE NEW WIRING AS REQUIRED. CONTRACTOR TO CONFIRM EXACT DISH LOCATION IN FIELD. REFER TO SHEET E2.6 FOR ADDITIONAL INFORMATION.

GENERAL DEMOLITION NOTES:

1. THE ELECTRICAL DRAWINGS ARE DIAGRAMMATIC ONLY. DO NOT SCALE THE ELECTRICAL DRAWINGS TO DETERMINE THE LOCATION OF EQUIPMENT OR OUTLETS. SEE ARCHITECTURAL PLANS, WHERE PROVIDED ON PROJECT, FOR EXTENT OF DEMOLITION.

2. THE EXISTING CONDITIONS SHOWN ARE FROM AVAILABLE RECORD DRAWINGS AND SHOWN FOR REFERENCE ONLY. CONTRACTOR SHALL VERIFY ACTUAL EXISTING CONDITIONS AT SITE PRIOR TO SUBMITTING BID. ALL DEMOLITION, ALTERATION, EXTENSION, RELOCATION, REHABILITATION WORK SHALL BE INCLUDED IN CONTRACT. NO ADDITIONAL ALLOWANCE OR CHANGE ORDERS WILL BE ACCEPTED.

3. CONTRACTOR IS RESPONSIBLE TO RELOCATE OR REMOVE FROM WALLS, CEILINGS, FLOOR SPACES, ETC. ANY EXISTING CONDUITS, WIRES, BOXES, FITTINGS, FIXTURES OR OTHER ELECTRICAL EQUIPMENT WHICH INTERFERES WITH PLANNED REMODEL WORK. PROVIDE CIRCUIT CONTINUATION REQUIRED FOR ALL EXISTING OUTLETS, FIXTURES, EQUIPMENT, ETC. SCHEDULED TO REMAIN.

4. NOTIFY THE ENGINEER IMMEDIATELY WHEREVER EXISTING EQUIPMENT IS ENCOUNTERED WHICH MUST BE RELOCATED DUE TO THE NEW CONSTRUCTION, OR NOT INDICATED ON "AS-BUILT" DRAWINGS OR WAS BURIED UNDERGROUND OR EMBEDDED IN STRUCTURE WALLS.

5. CAREFULLY PROTECT ALL WALLS, TRIM, FLOORS, EQUIPMENT, UTILITY LINES AND MATERIALS. WHEN WORKING ON FINISHED SURFACES, LIMIT DAMAGE TO THE SMALLER AREA IF POSSIBLE AND RESTORE TO THE ORIGINAL CONDITION ALL SURFACES WHICH ARE DAMAGED BECAUSE OF THE INSTALLATION OF THIS WORK.

6. EQUIPMENT, MATERIALS AND SUPPLIES TEMPORARILY REMOVED FOR PROTECTION SHALL BE REPLACED IN ORIGINAL LOCATIONS. ANY MATERIALS DAMAGED SHALL BE REPLACED WITH NEW MATERIALS OF LIKE KIND AND QUALITY.

7. DEMOLITION WORK SHALL BE DONE IN A MANNER WHICH WILL NOT CAUSE UNNECESSARY INCONVENIENCE OR DANGER TO USERS OF THE PREMISES AND ADJACENT SITE, AND NOT INTERFERE WITH ITS OPERATION. ANY DEMOLITION WORK TO BE PERFORMED MUST BE PLANNED IN ADVANCE.

8. DO ALL DRILLING, CUTTING, ETC. REQUIRED TO DEMOLISH ELECTRICAL WORK AS INDICATED OR PROVIDE BLANK COVER PLATE ON ALL OUTLETS EXPOSED BY REMOVAL OF FIXTURE OR DEVICES.

9. RESEAL ALL PENETRATIONS OR OPENING THROUGH WALLS, CEILING, FLOORS, ETC., TO MAINTAIN THE RATING OF STRUCTURE.

10. ALL REMOVED MATERIALS AND EQUIPMENT WHICH IS SALVAGED MATERIALS SHALL REMAIN IN THE PROPERTY OF THE OWNER. DELIVER SUCH SALVAGED MATERIALS AND EQUIPMENT ON THE PREMISES AS DIRECTED BY OWNER AND NEATLY PILE OR STORE THEM AND PROTECT FROM DAMAGED. DISPOSE OF ALL HAZARDOUS MATERIAL PER GUIDELINE OF THE STATE OF CALIFORNIA, DEPARTMENT OF HEALTH SERVICES AND OTHER AGENCIES HAVING JURISDICTION.

11. CONTRACTOR SHALL FIELD VERIFY EXISTING CONDUIT/WIRING RUNS, REUSE AS REQUIRE AND REMOVED ALL UNUSED CONDUIT/WIRING. UNUSED CONDUIT IN INACCESSIBLE LOCATIONS (WALLS TO REMAIN) CAN BE ABANDONED IN PLACE. REMOVE UNUSED WIRING.

12. CONTRACTOR TO VERIFY CIRCUIT NUMBER AND LOADS FOR ALL EXISTING EQUIPMENT PRIOR TO INSTALLATION OF NEW OR RELOCATED ELECTRICAL EQUIPMENT. REASSIGN CIRCUITS AND LOADS ACCORDINGLY. PROVIDE COMPLETE "AS BUILT" DRAWINGS AND TYPEWRITTEN DIRECTORIES FOR PANELS.

13. WHERE NECESSARY TO SHUT OFF UTILITY SERVICES OR CAUSE INTERRUPTION TO POWER OR SIGNAL SYSTEMS WHILE A BUILDING IS OCCUPIED OR THAT EFFECT ADJACENT BUILDINGS, SCHEDULE OUTAGES OR INTERRUPTIONS WITH THE OWNER, BUILDING OCCUPANTS AND/OR ADJACENT BUILDING OWNER(S) AND OCCUPANTS PRIOR TO CONDUCTING OUTAGE(S) OR INTERRUPTIONS.

14. REFER TO ARCHITECTURAL DEMOLITION DRAWING FOR DEMOLITION AREAS. THE SCOPE OF THE DEMOLITION SHALL INCLUDE ALL LABOR, EXISTING ELECTRICAL EQUIPMENT. VERIFY EXACT SCOPE PRIOR TO COMMENCING WORK. REFER TO DEMO PLAN FOR SPECIFIC AREAS NOT IN SCOPE THE SCOPE INCLUDES, BUT IS NOT LIMITED TO THE FOLLOWING:

    A. LIGHTING: CONTRACTOR TO DEMOLISH ALL EXISTING LIGHTING FIXTURES AND ASSOCIATED CONTROLS, U.O.N.

    B. POWER: CONTRACTOR TO DEMOLISH ALL EXISTING POWER, U.O.N.

    C. CONTRACTOR TO DEMOLISH ALL EXISTING ELECTRICAL SWITCHGEAR, PANELBOARDS, PULLBOXES, ETC., U.O.N.

    D. SIGNAL: CONTRACTOR TO DEMOLISH ALL EXISTING SIGNAL SYSTEMS (DATA OUTLETS, TELEPHONE OUTLETS, TELEVISION OUTLETS, ETC.). AV AND SOUND SYSTEM EQUIPMENT AND SPEAKERS TO REMAIN PROTECT IN PLACE.

    E. FIRE ALARM: CONTRACTOR TO DEMOLISH ALL EXISTING FIRE ALARM DEVICES, U.O.N.

    F. EXTERIOR LIGHTING: CONTRACTOR SHALL DEMOLISH ALL EXISTING EXTERIOR LIGHTING FIXTURES AND ASSOCIATED CONTROLS, U.O.N.

    G. EXTERIOR POWER, SIGNAL AND FIRE ALARM: CONTRACTOR SHALL DEMOLISH ALL EXISTING EXTERIOR POWER, SIGNAL AND FIRE ALARM DEVICES, U.O.N.

15. WHERE NEW PARTITIONS OR OTHER CONSTRUCTION WILL COVER EXISTING, REMAINING OUTLETS MAKING THEM INACCESSIBLE, RELOCATE THESE OUTLETS AS REQUIRED, OR MAKE OTHER PROVISIONS SO THAT THE OUTLETS WILL REMAIN ACCESSIBLE AND OPERATIONAL.

16. WHERE EXISTING WALLS AND CEILINGS ARE TO REMAIN, PROVIDE BLANK COVER PLATES FOR OUTLETS WHERE EQUIPMENT OR DEVICES ARE REMOVED UNDER THIS CONTRACT. PRIME BLANK PLATES AND PAINT TO MATCH SURROUNDING AREA.

17. WHERE FIXTURES, EQUIPMENT, DEVICES, ETC. ARE SPECIFIED BY THE CONTRACT DOCUMENTS FOR REMOVAL, THE CONTRACTOR SHALL REMOVE ALL CIRCUIT CONDUCTORS/CABLING BACK TO THE NEAREST REMAINING JUNCTION BOX AND/OR POINT OF TERMINATION.

18. RELOCATE EXISTING CONDUITS AND/OR CONDUCTORS/CABLING ROUTING THROUGH AREAS WHERE NEW/REMOVED WALLS ARE SPECIFIED.

19. RELOCATION AND/OR REMOVAL OF EXISTING EQUIPMENT, DEVICES, OUTLETS BOXES, CONDUIT, WIRING, ETC. MAY AFFECT THE OPERATION OF EXISTING, REMAINING ELECTRICAL EQUIPMENT/DEVICES, THE CONTRACTOR SHALL PROVIDE ADDITIONAL MATERIALS AS REQUIRED TO MAINTAIN AND/OR RESTORE CONTINUITY OF SERVICES TO EXISTING REMAINING ELECTRICAL/DEVICES.

20. DISCONNECT ABANDONED CIRCUITS AT EXISTING PANEL BOARDS AND REMOVE WIRE TO LAST REMAINING DEVICES. LABEL ALL ABANDONED CIRCUIT BREAKERS "SPARE".

Copyright © 2025

All ideas, designs, arrangements and plans indicated or represented by this drawing are owned by, and the property of, NICHOLS, MELBURG and ROSSETTO and were created, evolved and developed for use on, and in conjunction with, the specified project. None of such ideas, designs, arrangements and plans shall be used by or disclosed to any person, firm or corporation for any purpose whatsoever without the written permission of NICHOLS, MELBURG and ROSSETTO.

NICHOLS MELBURG & ROSSETTO
ARCHITECTS + ENGINEERS

300 KNOLLCREST DRIVE
REDDING, CA. 96002
(530) 222-3300 (530) 222-3538 FAX
http://www.nmrdesign.com

CONSULTANTS

tk1sc
Member of WSP
11870 Pierce Street, Suite 160
Riverside, California 92505
951.299.4160 www.tk1sc.com

Project Leader - Jerry Leonhardt
Electrical Lead - Jerry Leonhardt
WSP Job #: B2305166.000

LICENSE STAMPS

REGISTERED PROFESSIONAL ENGINEER
RAYMOND W. GRAFF
No. E15610
Exp. 12/31/2025
ELECTRICAL
STATE OF CALIFORNIA

PROJECT NAME

TEHAMA COUNTY
CORNING
VETERAN'S HALL

1620 SOLANO ST.
CORNING, CA

SHEET TITLE

ELECTRICAL DEMOLITION PLAN - LEVEL 2

DRAWING STATUS

CONSTRUCTION DOCUMENTS

REVISIONS

Sym.	Description	Date

Drawn By	
Date Issued	2/13/2025
Scale	1/8" = 1'-0"
Project No.	21-6497

SHEET No.

ED2.3

Login Name: LRSA_270366
Plot Date: February 13, 2025 - 9:40 am
File Name: P:\2021\B2305166.000 Corning Veterans Hall Remod\Drawings and Models\CAD\Electrical\ED2-3.dwg
Plotted By: AcPublish.sha | Layout: ED2.3 | Xref: A-XCH-FOR | X-XCH-FOR2 | X-XCH-FOR3 | X-XCH-FOR2

CENTRAL MONITORING SYSTEM SPECIFICATIONS

PART 1 - GENERAL REQUIREMENTS

GENERAL: THE CONTRACTOR SHALL BE RESPONSIBLE FOR THE FURNISHING OF ALL FINAL DESIGN, AGENCY APPROVALS, PLAN CHECK FEES, LABOR, EQUIPMENT, MATERIALS, AND PERFORMANCE OF OPERATIONS IN CONNECTION WITH THE INSTALLATION OF A COMPLETE AND FULLY FUNCTIONING CODE APPROVED CENTRAL MONITORING SYSTEM.

THE COMPLETE INSTALLATION SHALL CONFORM TO APPLICABLE SECTIONS OF NFPA-72 2016 EDITION OR LATEST ADOPTED VERSION, LOCAL CODE REQUIREMENTS AND NATIONAL ELECTRICAL CODE.

IT IS THE INTENT OF THE CONTRACT DOCUMENTS, WHICH ARE PRESENTED IN A DIAGRAMMATIC, "DESIGN-BUILD" FORMAT, FOR THE CONTRACTOR TO DESIGN, PROVIDE AND INSTALL A COMPLETE AND FULLY FUNCTIONING, CODE APPROVED CENTRAL MONITORING SYSTEM. IN THE EVENT THAT ADDITIONAL DETAILS OR SPECIAL CONSTRUCTION IS REQUIRED FOR WORK INDICATED OR SPECIFIED IN THIS SECTION OR WORK SPECIFIED IN OTHER SECTIONS, IT SHALL BE THE RESPONSIBILITY OF THE CONTRACTOR TO PROVIDE ALL MATERIAL AND EQUIPMENT WHICH IS USUALLY FURNISHED WITH SUCH SYSTEMS, IN ORDER TO PROVIDE A COMPLETE AND FULLY FUNCTIONING INSTALLATION, WHETHER MENTIONED HEREIN OR NOT.

DESIGN REQUIREMENTS: THE CENTRAL MONITORING SYSTEM SHALL BE RESPONSIBLE FOR CONTINUALLY SUPERVISING AND MONITORING BY ZONE THE FOLLOWING INITIATING, SIGNALING AND MONITORING CIRCUITS (AT A MINIMUM):

MANUAL FIRE PULL STATIONS.
SMOKE AND HEAT DETECTORS - INCLUDING THOSE REQUIRED UNDER OTHER SECTIONS.
(FOR HVAC, SHUTOFF, SMOKE FIRE DAMPER CONTROL, ETC.)
SPRINKLER FLOW / TAMPER SWITCHES - INCLUDING THOSE IN OTHER SECTIONS.
PIV / OS&Y DEVICES - INCLUDING THOSE INSTALLED IN OTHER SECTIONS.
ALARM SIGNALING CIRCUITS.
REMOTE ANNUNCIATOR.

SYSTEM CONTROLS SHALL BE U.L. LISTED FOR POWER LIMITED APPLICATIONS PER NEC (OR CEC WHERE ADOPTED) ART. 760.121. SYSTEM SHALL BE CAPABLE OF COMMUNICATING WITH AN OFFICE SITE CENTRAL MONITORING SYSTEM.

ALL WIRING SHALL BE INSTALLED IN CONCEALED CONDUIT. ROUTE FIRE ALARM SYSTEM WIRING IN SEPARATE CONDUITS FROM ALL OTHER WIRING. ADDITIONALLY:

1. WHEN CONDUIT CANNOT BE CONCEALED, CONTRACTOR SHALL OBTAIN WRITTEN APPROVAL FROM ARCHITECT/ENGINEER TO PROVIDE SURFACE RACEWAYS OR CONDUITS PRIOR TO ANY ROUGH-IN. SURFACE RACEWAYS AND CONDUITS SHALL BE PROPERLY PREPARED AND PAINTED- COLOR AS SELECTED BY ARCHITECT/ENGINEER.
2. WHEN EXPOSED CEILINGS OR OPEN GRID CONDITIONS OCCUR, CONDUITS SHALL BE ROUTED NEATLY AND IN PARALLEL TO STRUCTURES OR DUCT WORK.
3. VISUALLY OBJECTIONABLE CONDUITS SHALL BE REROUTED AT THE REQUEST OF THE ARCHITECT AT NO ADDITIONAL COST.

CONTROL PANEL SHALL EMPLOY AUTOMATIC DRIFT COMPENSATION OF SMOKE DETECTORS. CONTROL PANEL SHALL MEET THE REQUIREMENTS OF NFPA CHAPTER 7 FOR CALIBRATED TEST.

MANUAL STATIONS SHALL BE DUAL ACTION WITH A KEYED RESET. KEY SHALL MATCH THE CONTROL PANEL. STATIONS SHALL BE ADA 5 LB. PULL FORCE APPROVED.

ALL AUDIO VISUAL DEVICES SHALL BE MANUFACTURER'S STANDARD WHITE UNLESS OTHERWISE NOTED.

PROVIDE ALL NECESSARY CONDUIT(S) AND CONDUCTORS AS REQUIRED TO CONNECT DEVICES REQUIRED TO BE MONITORED BY THE LOCAL AUTHORITIES HAVING JURISDICTION. THESE INCLUDE, BUT ARE NOT LIMITED TO, PIV(S), BACKFLOW PREVENTER(S), DETECTOR CHECK VALVE(S), OS&Y VALVE(S), ETC. REFER TO CIVIL/PLUMBING DRAWINGS FOR EXACT LOCATIONS AND QUANTITIES OF THESE DEVICES.

CONTROL PANEL SHALL BE FIELD PROGRAMMABLE WITHOUT THE USE OF A LAP TOP COMPUTER OR OTHER SPECIAL INSTRUMENTS.

REQUIRED APPROVALS: THE CENTRAL MONITORING SYSTEM SHALL BE APPROVED BY THE LOCAL FIRE AUTHORITY IN ADDITION TO ANY OTHER REQUIRED APPROVALS. THIS APPROVAL SHALL BE OBTAINED PRIOR TO THE SUBMITTAL OF SHOP DRAWING DOCUMENTATION TO THE ARCHITECT/ENGINEER FOR REVIEW AND APPROVAL.

INSTALLATION OF THE CENTRAL MONITORING SYSTEM SHALL NOT BE STARTED UNTIL DRAWINGS, INCLUDING STATE FIRE MARSHAL LISTING NUMBERS OF FIRE ALARM COMPONENTS, ARE SUBMITTED TO AND APPROVED BY THE LOCAL FIRE MARSHAL. WRITTEN CERTIFICATION BY FIRE ALARM EQUIPMENT DISTRIBUTOR OR MANUFACTURER SHALL BE SUBMITTED TO THE ARCHITECT AND THE STATE FIRE MARSHAL STATING THAT THE NEW SYSTEM AND ITS COMPONENT PARTS ARE AS "APPROVED AND LISTED" BY THE STATE FIRE MARSHAL AND THAT INSTALLATION CONFORMS IN ALL RESPECTS TO REQUIREMENTS SET FORTH IN ARTICLE 72, TITLE 24, PART 2, CALIFORNIA CODE OF REGULATIONS. FIRE ALARM SYSTEM CONSTRUCTION SHALL NOT BE STARTED UNTIL FIRE ALARM DRAWINGS ARE APPROVED BY AHJ AND ENGINEER.

SYSTEM PERFORMANCE: FURNISH AND INSTALL A COMPLETE CENTRAL MONITORING SYSTEM AS DESCRIBED HEREIN AND AS INDICATED ON DRAWINGS TO BE WIRED, CONNECTED, AND LEFT IN FIRST CLASS OPERATING CONDITION. SYSTEM SHALL USE CLOSED LOOP INITIATING DEVICE CIRCUITS WITH INDIVIDUAL ZONE SUPERVISION, INDIVIDUAL INDICATING APPLIANCE CIRCUIT SUPERVISION, INCOMING AND STANDBY POWER SUPERVISION. INCLUDE A CONTROL PANEL, MANUAL PULL STATIONS, AUTOMATIC FIRE DETECTORS, HORNS, BELLS, FLASHING LIGHTS, ANNUNCIATOR, ALL WIRING, CONNECTIONS TO DEVICES, OUTLET BOXES, JUNCTION BOXES, AND ALL OTHER NECESSARY MATERIAL FOR A COMPLETE OPERATING SYSTEM.

SUBMITTALS: SUBMIT IN ACCORDANCE WITH PROJECT GENERAL REQUIREMENTS SPECIFICATIONS. SHOW EQUIPMENT LOCATIONS, WIRING SCHEMATICS, DETAILS, PANEL CONFIGURATION AND SIZES AND A POINT-TO-POINT SCHEMATICS OF CIRCUITS AND ZONE SCHEDULES. INCLUDE FRONT ELEVATIONS, CABINET DIMENSIONS, TYPE OF MOUNTING, DOORS, BARRIERS, CATALOG NUMBER OF LOCKS, AND FINISHES FOR ALL TERMINAL CABINETS. SHOW INTERFACES TO EQUIPMENT FURNISHED BY OTHERS, IDENTIFYING NUMBERS OF WIRES AND TERMINATION REQUIREMENTS. PROVIDE MANUFACTURER CUT SHEETS FOR ALL SYSTEM COMPONENTS INDICATING U.L. AND CSFM LISTINGS. GENERIC CUT SHEETS ARE UNACCEPTABLE - EACH CUT SHEET SHALL INDICATE/IDENTIFY SPECIFIC COMPONENTS ALONG WITH ANY REQUIRED COMPONENT OPTIONS/ACCESSORIES UTILIZED ON THE PROJECT. PROVIDE COMPLETE SEQUENCE OF OPERATIONS OF SYSTEM. PROVIDE COMPLETE SYSTEM WIRING DIAGRAMS FOR COMPONENTS CONNECTED TO SYSTEM AND INTERFACES TO EXISTING EQUIPMENT. PROVIDE A COPY OF ANY STATE OR LOCAL FIRE ALARM SYSTEM EQUIPMENT APPROVALS. PROVIDE ONE COPY OF ACCEPTANCE TEST PROCEDURES FOR REVIEW.

CERTIFICATION OF INSTALLATION COMPANY:

A. PROOF THAT THE FIRE ALARM CONTRACTOR IS UNDERWRITERS LABORATORIES, INC. (U.L.) LISTED UNDER THE CLASSIFICATION OF "PROTECTIVE SIGNALING SERVICES - LOCAL, AUXILIARY, REMOTE STATION AND PROPRIETARY (UUJS) AND CENTRAL STATION PROTECTIVE SIGNALING SERVICES (UUFX)."
B. COPY OF THE FOLLOWING (NICET) CERTIFICATES. PROOF THAT THE CERTIFICATE HOLDERS ARE A PART OF THE FIRE ALARM CONTRACTOR'S LOCAL FACILITY SERVICING THIS PROJECT AND WILL INSTALL THE FIRE ALARM SYSTEM. NON-NICET INSTALLERS MAY BE UTILIZED ON THE PROJECT TO ASSIST NICET-CERTIFIED INSTALLER ONLY IF DIRECTLY SUPERVISED BY NICET-CERTIFIED INSTALLER. THE RATIO OF NICET-TO-NON-NICET INSTALLERS SHALL NOT EXCEED 1:3.
   1. CERTIFIED NICET TECHNICIAN LEVEL 2 (INSTALLER).
   2. CERTIFIED NICET TECHNICIAN LEVEL 4 (SUPERVISOR).
C. QUALITY ASSURANCE: WORK SHALL BE PERFORMED BY A QUALIFIED SYSTEMS CONTRACTOR HOLDING A C-10 LICENSE.

WARRANTY: CONTRACTOR SHALL WARRANT COMPLETED CENTRAL MONITORING SYSTEM WIRING AND EQUIPMENT TO BE FREE FROM INHERENT MECHANICAL AND ELECTRICAL DEFECTS FOR A PERIOD OF ONE YEAR FROM DATE OF COMPLETION AND CERTIFIED TEST, OR FROM DATE OF FIRST BENEFICIAL USE. THE EQUIPMENT MANUFACTURER SHALL MAKE AVAILABLE TO THE OWNER A MAINTENANCE CONTRACT PROPOSAL TO PROVIDE A MINIMUM OF (2) INSPECTIONS AND TESTS PER YEAR IN COMPLIANCE WITH NFPA-72 GUIDELINES.

PART II - EXECUTION

ZONING: THE BUILDING SHALL BE DIVIDED INTO ZONES FOR ALARM ANNUNCIATION AND SYSTEM CONFIGURATION PER THE REQUIREMENTS OF THE LOCAL FIRE MARSHAL AND/OR AUTHORITY. A ZONE WILL BE ASSIGNED FOR EACH SPRINKLER FLOW SWITCH AND EACH TAMPER SWITCH. AIR-HANDLING SYSTEMS REQUIRING IN-DUCT DETECTION SHALL BE ZONED PER UNIT. UNIT SHALL BE SHUT DOWN DIRECTLY BY AUXILIARY RELAY CONTROLLED BY DUCT SMOKE DETECTOR.

ACCEPTANCE TESTING: FINAL ACCEPTANCE WILL BE GIVEN AFTER SUCCESSFUL ACCEPTANCE TESTING AND SUBMISSION OF APPROVED AS-BUILT DOCUMENTATION AND OPERATION AND MAINTENANCE MANUALS. ACCEPTANCE TESTING OF FIRE DETECTION SYSTEM SHALL BE AS REQUIRED BY THE STATE FIRE MARSHAL AND LOCAL AUTHORITY HAVING JURISDICTION. CONTRACTOR SHALL BE RESPONSIBLE FOR IDENTIFYING REQUIRED TESTING, COORDINATING SCHEDULING, AND CONDUCTING TEST NECESSARY TO ACHIEVE OCCUPANCY CERTIFICATION. TESTS SHALL INCLUDE THE FOLLOWING:

AN OPERATION OF EACH INITIATING DEVICE.
AN OPERATION OF EACH INDICATING DEVICE (ALARM, HORN, AND ALARM LAMP).
OPERATION OF ALL FEATURES OF SYSTEM UNDER NORMAL OPERATION.
OPERATION OF SUPERVISORY FEATURES OF SYSTEM.
OPERATION OF SYSTEM ON STANDBY POWER WITH PRIMARY POWER OFF.

UPON COMPLETION OF INSTALLATION OF CENTRAL MONITORING/FIRE ALARM EQUIPMENT, ELECTRICAL CONTRACTOR SHALL PROVIDE TO THE ENGINEER A SIGNED, WRITTEN STATEMENT CONFIRMING THAT THE FIRE ALARM EQUIPMENT WAS INSTALLED IN ACCORDANCE WITH SPECIFICATIONS, WIRING DIAGRAMS, INSTRUCTIONS AND DIRECTIONS PROVIDED BY MANUFACTURER. A COMPLETE DESCRIPTION OF NATURE AND SCOPE OF TRAINING PROGRAM FOR MAINTENANCE TECHNICIANS, OPERATORS, SYSTEM USERS, AND MANAGEMENT PERSONNEL SHALL BE PROVIDED. CONTRACTOR SHALL PROVIDE A COMPLETE TRAINING PROGRAM FOR SYSTEM USERS, AND A MINIMUM OF (4) COPIES OF OPERATING INSTRUCTIONS. IN ADDITION, CONTRACTOR SHALL PROVIDE A TRAINING PROGRAM FOR THE OWNER'S MAINTENANCE PERSONNEL. THIS TRAINING SHALL BE PROVIDED FOR A MINIMUM OF (3) PERSONS WITHIN ONE YEAR OF COMPLETION DATE. COSTS FOR INSTRUCTION SHALL BE PAID BY CONTRACTOR. TRAINING SHALL BE SCHEDULED AND COORDINATED BY THE OWNER.

NFPA 72, CHAPTER 7, INSPECTION TESTING AND MAINTENANCE COMPLETE THE INSPECTION AND TESTING FORM IN ITS ENTIRETY. SUBMIT A COPY TO THE OWNER, ARCHITECT AND FIRE AUTHORITY.

PART III - PRODUCTS (CMCP)

CENTRAL MONITORING EQUIPMENT SHALL BE U.L. LISTED AND C.S.F.M. LISTED. CATALOG AND MODEL NUMBERS LISTED ARE INTENDED TO ESTABLISH TYPE AND QUALITY OF EQUIPMENT AND SYSTEM DESIGN AS WELL AS OPERATING FEATURES REQUIRED. MANUFACTURER'S SPECIFICATION SHEETS OF EACH ITEM SO LISTED SHALL BE CONSIDERED TO BE A PART OF THESE SPECIFICATIONS AND BINDING HEREIN. ANY DEVIATION FROM INTENDED FUNCTIONS OF SYSTEM SPECIFIED MAY NOT BE APPROVED, AT OPTION OF THE OWNER/ENGINEER.

EQUIPMENT SUBSTITUTIONS MUST BE PRE-APPROVED BY THE ELECTRICAL ENGINEER (10) DAYS PRIOR TO THE BID DATE. CONTRACTOR MUST SHOW OPERATION OF EQUIPMENT AND COMPLIANCE WITH ALL FUNCTIONS AND FEATURES SPECIFIED. EQUIPMENT SUBSTITUTIONS NOT PRE-APPROVED PRIOR TO BID DATE WILL BE REJECTED.

CENTRAL MONITORING CONTROL PANEL (CMCP): WHERE INDICATED ON DRAWINGS, PROVIDE AND INSTALL A CENTRAL MONITORING CONTROL PANEL. CONSTRUCTION SHALL BE MODULAR WITH SOLID STATE, MICROPROCESSOR-BASED ELECTRONICS.

FIRE ALARM SYSTEM POWER SUPPLY (FAPS): THE FAPS IS A DEVICE DESIGNED FOR USE AS EITHER A REMOTE 24 VOLT POWER SUPPLY OR USED TO POWER NOTIFICATION APPLIANCES. THE FAPS SHALL OFFER UP TO 6.0 AMPS (4.0 AMPS CONTINUOUS) OF REGULATED 24 VOLT POWER. IT SHALL INCLUDE AN INTEGRAL CHARGER DESIGNED TO CHARGE 7.0 AMP HOUR BATTERIES AND TO SUPPORT 60 HOUR STANDBY. THE FAPS SHALL HAVE TWO INPUT TRIGGERS. THE INPUT TRIGGER SHALL BE A NOTIFICATION APPLIANCE CIRCUIT (FROM THE FIRE ALARM CONTROL PANEL) OR A RELAY. FOUR OUTPUTS (TWO STYLE Y OR Z AND TWO STYLE Y) SHALL BE AVAILABLE FOR CONNECTION TO THE NOTIFICATION DEVICES. THE FAPS SHALL INCLUDE THE ABILITY TO DELAY THE AC FAIL DELAY PER NFPA REQUIREMENTS.

ANNUNCIATOR/NETWORK SYSTEM ANNUNCIATOR: WHERE INDICATED ON DRAWINGS OR AS REQUIRED BY LOCAL AHJ, PROVIDE AND INSTALL A CHARACTER DISPLAY REMOTE ANNUNCIATOR. REMOTE ANNUNCIATOR SHALL BE ELECTRICALLY SUPERVISED FROM CONTROL PANEL. REMOTE ANNUNCIATOR SHALL BE INSTALLED IN A FLUSH OR SURFACE MOUNTED CABINET WITH HINGED DOOR AND LOCK. COORDINATE FINAL LOCATION OF ALL ANNUNCIATORS WITH THE ARCHITECT AND LOCAL AHJ PRIOR TO ROUGH-IN.

FATC: PROVIDE FIRE ALARM TERMINAL CABINET AS REQUIRED OR AS SHOWN ON DRAWINGS.

HORN/STROBE: HORN/STROBE DEVICES SHALL BE WALL OR CEILING MOUNTED PER THE DRAWINGS OR AS REQUIRED BY LOCAL AHJ. SOUNDER/STROBE SHALL OPERATE ON 24 VDC POLARIZED CIRCUIT AND SHALL BE PROVIDED WITH A SEMI-FLUSH MOUNTING PLATE. STROBE LIGHT SHALL BE WHITE LEXAN WITH "FIRE" ON 2 SIDES. HORN SHALL HAVE A MINIMUM SOUND OUTPUT OF 100 DB AT 10'-0". THE STROBE SHALL HAVE A CANDELA DISTRIBUTION/RATING TO MEET ADA REQUIREMENTS.

SPRINKLER BELL: PROVIDE WHERE INDICATED ON DRAWINGS OR AS REQUIRED BY LOCAL AHJ. INCLUDE ALL COSTS IN BASE BID TO PROVIDE AND INSTALL A FLUSH HORN OR BELL PER THE EXTERIOR FLUSH HORN DETAIL. AN EXPOSED EXTERIOR BELL OR HORN IS NOT ACCEPTABLE UNLESS ITS USE IS DIRECTED BY THE LOCAL FIRE MARSHAL. THE FIRE ALARM CONTRACTOR SHALL NOTIFY THE ARCHITECT OF THE USE OF SURFACE MOUNTED BELLS/HORNS PRIOR TO ROUGH-IN.

MANUAL STATIONS: FURNISH AND INSTALL WHERE INDICATED ON DRAWINGS OR AS REQUIRED BY LOCAL AHJ. DEVICE SHALL BE ADDRESSABLE UNLESS OTHERWISE NOTED. STATION SHALL BE KEYED ALIKE AS THE CONTROL PANEL.

SMOKE DETECTORS: FURNISH AND INSTALL WHERE INDICATED ON DRAWINGS OR AS REQUIRED BY LOCAL AHJ. SENSORS SHALL BE ANALOG ADDRESSABLE TYPE.

DUCT SMOKE DETECTORS: DUCT SMOKE DETECTORS SHALL BE PHOTOELECTRIC TYPE AND THE INSTALLATION MUST COMPLY WITH NFPA-90A. PROVIDE WHERE INDICATED ON DRAWINGS OR AS REQUIRED BY LOCAL AHJ.

HEAT DETECTORS: FURNISH AND INSTALL WHERE INDICATED ON DRAWINGS OR AS REQUIRED BY LOCAL AHJ. SENSORS SHALL BE ADDRESSABLE.

BEAM DETECTORS: BEAM DETECTORS SHALL BE REFLECTIVE TRANSMITTER/RECEIVER TYPE WITH INTEGRAL SENSITIVITY TRANSMITTING AN INFRARED SIGNAL TO A REFLECTIVE SURFACE OR RECEIVER. THE BEAM DETECTOR SHALL HAVE A KEYED REMOTE TEST AND ALARM INDICATOR MOUNTED WITHIN 100 FEET OF THE BEAM DETECTOR. FINAL LOCATION TO BE DETERMINED BY ARCHITECT. THE BEAM DETECTOR SHALL HAVE AN INTEGRAL OPTICS ALIGNMENT (TOOL) BUILT IN THE TRANSMITTER. AN ADDRESSABLE, 4 WIRE MONITORING MODULE SHALL COMMUNICATE THE ALARM AND TROUBLE INDICATIONS OF THE BEAM DETECTOR BACK TO THE FIRE ALARM CONTROL PANEL OR TRANSPONDER.

WATERFLOW SWITCHES: WATERFLOW SWITCHES SHALL BE PROVIDED WITH A TAPPED 1/2" CONDUIT CONNECTION. THE FLOW SWITCH SHALL BE U.L. LISTED FOR ITS INTENDED PURPOSE. DEVICE TO BE FURNISHED AND INSTALLED BY SPRINKLER CONTRACTOR. TAMPER SWITCHES: SPRINKLER VALVE TAMPER SWITCHES COVER REMOVAL SHALL BE SUPERVISED. SWITCH SHALL BE PROVIDED WITH EITHER ONE OR TWO SETS OF S.P.D.T. MICRO SWITCHES AS REQUIRED. TAMPER SWITCH SHALL BE UL LISTED FOR ITS INTENDED PURPOSE. DEVICE TO BE FURNISHED AND INSTALLED BY SPRINKLER CONTRACTOR.

MONITOR MODULE: MONITOR RELAYS FOR MONITORING SMOKE DOORS, GENERATORS, AUTOMATIC TRANSFER SWITCHES, FIRE SUPPRESSION SYSTEMS, ETC. AND WHERE INDICATED ON THE DRAWINGS OR AS REQUIRED BY LOCAL AHJ.

CONTROL MODULE: PROVIDE WHERE INDICATED ON DRAWINGS OR AS REQUIRED BY LOCAL AHJ.

MAGNETIC DOOR HOLDER: PROVIDE WHERE INDICATED ON DRAWINGS OR AS REQUIRED BY LOCAL AHJ.

RELAY MODULE: PROVIDE WHERE INDICATED ON DRAWINGS OR AS REQUIRED BY LOCAL AHJ. RELAY(S) SHALL BE RATED FOR CONTINUOUS MOTOR OR INDUCTIVE LOADS SUCH AS COMBINATION SMOKE FIRE DAMPERS (CSFDs), MAGNETIC HOLD OPENS, ETC. QUANTITY OF RELAYS SHALL BE BASED ON PROJECT-SPECIFIC CSFD LOADS WHICH SHALL NOT EXCEED 80% OF MOTOR LOAD RATING OF THE RELAY. INCLUDE ALL COSTS IN BASE BID TO ADD ADDITIONAL 120V CONDUCTORS AS REQUIRED TO PARTITION LOADS ON INDIVIDUAL RELAYS TO MEET THE 80% RELAY MOTOR LOAD LIMIT.

RELAY MODULE: PROVIDE WHERE INDICATED ON DRAWINGS OR AS REQUIRED BY LOCAL AHJ. RELAY(S) SHALL BE RATED FOR CONTINUOUS MOTOR OR INDUCTIVE LOADS SUCH AS COMBINATION SMOKE FIRE DAMPERS (CSFDs), MAGNETIC HOLD OPENS, ETC. QUANTITY OF RELAYS SHALL BE BASED ON PROJECT-SPECIFIC CSFD LOADS WHICH SHALL NOT EXCEED 80% OF MOTOR LOAD RATING OF THE RELAY. INCLUDE ALL COSTS IN BASE BID TO ADD ADDITIONAL 120V CONDUCTORS AS REQUIRED TO PARTITION LOADS ON INDIVIDUAL RELAYS TO MEET THE 80% RELAY MOTOR LOAD LIMIT.

REMOTE LED: PROVIDE REMOTE LED AND/OR REMOTE LED/TEST STATION WHERE SHOWN ON DRAWINGS OR AS REQUIRED BY LOCAL AHJ. DEVICE LOCATION SHALL BE COORDINATED WITH LOCAL AHJ AND ARCHITECT PRIOR TO ROUGH-IN.

UNIVERSAL DIGITAL ALARM COMMUNICATOR TRANSMITTER (UDACT): THE UDACT IS AN INTERFACE FOR COMMUNICATING DIGITAL INFORMATION BETWEEN A CENTRAL MONITORING CONTROL PANEL AND A U.L. LISTED CENTRAL STATION.

1. THE UDACT SHALL BE COMPACT IN SIZE, MOUNTING IN A STANDARD MODULE POSITION OF THE FIRE ALARM CONTROL CABINET. THE CONNECTION BETWEEN THE UDACT AND THE CONTROL PANEL SHALL BE COMPLETELY SUPERVISED.
2. THE UDACT SHALL INCLUDE CONNECTIONS FOR DUAL TELEPHONE LINES (WITH VOLTAGE DETECT), PER U.L./NFPA REQUIREMENTS. IT SHALL INCLUDE THE ABILITY FOR SPLIT REPORTING OF PANEL EVENTS.
3. THE UDACT SHALL BE COMPLETELY FIELD PROGRAMMABLE FROM A BUILT-IN KEYPAD AND FOUR-CHARACTER RED, SEVEN-SEGMENT DISPLAY.
4. THE UDACT SHALL BE CAPABLE OF TRANSMITTING EVENTS IN AT LEAST NINE DIFFERENT FORMATS. THIS ENSURES COMPATIBILITY WITH EXISTING AND FUTURE TRANSMISSION FORMATS. ACCEPTED FORMATS INCLUDE 3+1 STANDARD, 4+1 STANDARD, ADEMCO CONTACT ID OR 4+1 AND 4+2 ADEMCO.
5. COMMUNICATION SHALL INCLUDE VITAL SYSTEM STATUS SUCH AS:

   INDEPENDENT ZONE (ALARM, TROUBLE, NON-ALARM)
   INDEPENDENT ZONE SUPERVISORY SIGNAL
   AC (MAINS) POWER LOSS
   LOW BATTERY AND EARTH FAULT
   SYSTEM OFF NORMAL
   12 AND 24 HOUR TEST SIGNAL
   ABNORMAL TEST SIGNAL (PER UL REQUIREMENTS)
   EIA-485 COMMUNICATIONS FAILURE

6. THE UDACT SHALL INCLUDE INDEPENDENT ZONE/POINT REPORTING IN THE CONTACT ID FORMAT. IN THIS FORMAT THE UDACT SHALL SUPPORT TRANSMISSION OF UP TO 2,040 POINTS. THIS ENABLES THE CENTRAL STATION TO HAVE EXACT DETAILS CONCERNING THE ORIGIN OF THE FIRE OR RESPONSE EMERGENCY.
7. UDACT PROVISIONING SHALL BE INCLUDED IN THE BASE BID BASED ON THE FOLLOWING ASSUMPTIONS:

   ASSUME THE FOLLOWING INFORMATION WILL BE PROVIDED BY THE OWNER TO PROGRAM AN INSTALLED UDACT TO A THIRD-PARTY CENTRAL STATION:

   a. MONITORING ACCOUNT NUMBER
   b. PRIMARY RECEIVER PHONE NUMBER
   c. SECONDARY RECEIVER PHONE NUMBER
   d. RECEIVER TYPE
   e. TRANSMISSION FORMAT
   f. MONITORING COMPANY NAME
   g. MONITORING COMPANY MAIN PHONE
   h. CONTACT PERSON AT MONITORING COMPANY

   ASSUME THIRD-PARTY CENTRAL STATION PROVIDER SHALL PROVIDE 72 HOURS ADVANCE NOTICE FOR FIRE ALARM CONTRACTOR/INSTALLER TO BE PRESENT FOR UDACT PROGRAMMING, PRE-TESTING, TESTING, AND CONNECTION.

   ASSUME A REPRESENTATIVE FROM THE THIRD-PARTY CENTRAL STATION IS REQUIRED AT LOCATION AT TIME OF PROGRAMMING, PRETEST AND CONNECTION. ADDITIONALLY, THIRD-PARTY CENTRAL STATION PROVIDER SHALL PROVIDE ANY MONITORING REPORTS REQUIRED BY THE FIRE DEPARTMENT. A SEPARATE PERMIT WILL BE SUBMITTED AND PAID FOR BY THE THIRD-PARTY CENTRAL STATION PROVIDER.

   CONNECTED LIFE SAFETY SERVICES (CLSS): THE CLSS IS AN INTERFACE FOR COMMUNICATING SYSTEM EVENTS VIA OWNER LOCAL AREA NETWORK. CLSS SHALL BE CONFIGURED WITH A FIXED IP ADDRESS (FURNISHED BY OWNER-IMPLEMENTED BY CONTRACTOR) TO ALLOW AUTOMATIC EMAIL OR CELL PHONE TEXT MESSAGING IN RESPONSE TO ANY SYSTEM EVENT. ADDITIONAL CLSS UNITS SHALL ALLOW VIEWING OF SYSTEM STATUS, SYSTEM EVENT HISTORY AND DEVICE PROPERTIES BASED ON ACCESS PERMISSIONS DEFINED BY THE OWNER. CONTRACTOR SHALL INCLUDE (8) HOURS OF CLSS CONFIGURATION BASED ON OWNER INPUT COMBINED WITH CONFIGURATION TRAINING FOR THE OWNER'S REPRESENTATIVES IN BASE BID.

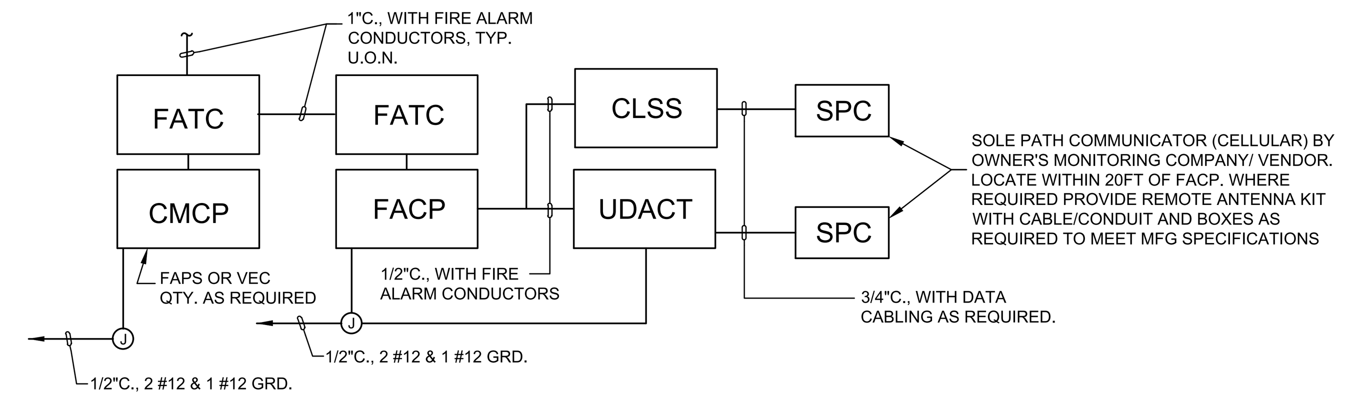

CENTRAL MONITORING SYSTEM SCHEMATIC

CENTRAL MONITORING SYSTEM PRODUCTS (NOTIFIER)

SYSTEM SHALL BE NOTIFIER. GENE KNUST-GRAICHEN, APPLE VALLEY COMMUNICATIONS, INC. (714) 878-4582, gene@avcsystems.com.

CMCP:	NOTIFIER #NFS-320 - FOR USE IN ONE THRU THREE STORY BUILDING WITH OR WITHOUT VEC REQUIREMENT. NOTIFIER #NFS2-640 - FOR USE IN ONE THRU FIVE STORY BUILDINGS WITH OR WITHOUT VEC REQUIREMENT. NOTIFIER #NFS2-3030 - FOR USE IN ONE THRU FIVE STORY BUILDINGS WITH ELEVATORS IN A CAMPUS ENVIRONMENT WITH OR WITHOUT VEC REQUIREMENT.
PACP:	NOTIFIER TYPE #RP 2001
ANNUNCIATOR:	NOTIFIER TYPE FDU-80 (FOR USE WITH NFS-320 AND NFS2-640) NOTIFIER TYPE LCD-160 (FOR USE WITH NFS2-3030) OR LDM-32 CUSTOM GRAPHICS PANEL (WHERE REQUIRED BY LOCAL AHJ OR INDICATED ON PLANS) NOTIFIER TYPE NCA-2 (FOR USE AS CAMPUS/NETWORK ANNUNCIATOR)
FATC:	18"x 18"x 4" METAL CABINET WITH SCREW COVER (FOR USE WITH NFS-320) 24"x 24"x 6" METAL CABINET WITH SCREW COVER (FOR USE WITH NFS2-640 & NFS2-3030)
POWER SUPPLY(FAPS):	NOTIFIER #PSE-10 NOTIFIER #ACPS-610
HORN / STROBE:	SYSTEM SENSOR #L-SERIES
STROBE:	SYSTEM SENSOR #L-SERIES
SPEAKER/ STROBE:	SYSTEM SENSOR #L-SERIES
SPEAKER:	SYSTEM SENSOR #L-SERIES
SPRINKLER BELL:	NOTIFIER #KMS-10-24. SEE EXTERIOR FLUSH HORN DETAIL. SYSTEM SENSOR #SSM SERIES
MANUAL STATION:	NOTIFIER #NBG-12LX.
PREACTION RELEASING STATION:	NOTIFIER #NBG-12LR W/FMM-101
SMOKE DETECTORS: (RETURN AIR, AREA, IN-DUCT AREA)	NOTIFIER #FSP-951 PHOTOELECTRIC
SMOKE / CO DETECTORS:	SYSTEM SENSOR #FCO-951
SOUNDER BASE (INTELLIGENT):	SYSTEM SENSOR #B200-S (WHERE COMBINATION CO/ SMOKE DETECTORS ARE REQUIRED) SYSTEM SENSOR #B200-SLF (LOW FREQUENCY SOUND FOR USE IN SLEEPING AREAS)
DUCT DETECTORS (SMOKE):	NOTIFIER #DNR W/FSP-951R SMOKE DETECTOR HEAD
HEAT DETECTORS:	NOTIFIER #FST-951
BEAM SMOKE DETECTORS:	NOTIFIER #FS-OSI-R1/RTS151KEY
WATERFLOW:	NOTIFIER #WFD SERIES.
TAMPER:	NOTIFIER #PIBV2 SERIES NOTIFIER #OSY2 SERIES.
MONITOR MODULE:	NOTIFIER #FMM-1, #FDM-1, OR FMM-101
CONTROL MODULE:	NOTIFIER #FCM-1
ADDRESSABLE CONTROL RELAY:	NOTIFIER #FRM-1 WITH SYSTEM SENSOR #PR-1 OR #R-10T AS REQUIRED
MAG DOOR HOLDER:	NOTIFIER #FM SERIES
REMOTE LED:	NOTIFIER #RA100Z or, if required, #RTS151 series
COMMUNICATOR:	NOTIFIER MODEL #UDACT2
SOLE PATH COMMUNICATOR (SFC):	NAPCO OR EQUAL (WITH CELLULAR SERVICE)
CONNECTED LIFE SAFETY SERVICES(CLSS):	NOTIFIER TYPE #CLSS
VOICE EVACUATION SYSTEM:	NOTIFIER #NFC-50/100
ALL OTHER MISCELLANEOUS ITEMS:	NOTIFIER / WHEELOCK / KIRKLAND / SYSTEM SENSOR

FIRE ALARM/CENTRAL MONITORING SYSTEM SYMBOLS

FACP	FIRE ALARM CONTROL PANEL - SEE SPECIFICATIONS.
CMCP	CENTRAL MONITOR CONTROL PANEL- SEE SPECIFICATIONS
FAAP	FIRE ALARM ANNUNCIATOR PANEL - SEE SPECIFICATIONS.
FATC	FIRE ALARM TERMINAL CABINET - SEE SPECIFICATIONS.
FAPS	FIRE ALARM SYSTEM POWER SUPPLY/TRANSPONDER PANEL - SEE SPECIFICATIONS.
PACP	FIRE ALARM PRE-ACTION CONTROL PANEL - SEE SPECIFICATIONS.
VEC	FIRE ALARM VOICE EVACUATION SYSTEM CONTROL PANEL - SEE SPECIFICATIONS.
H	FIRE ALARM HORN, WALL MOUNTED - SEE SPECIFICATIONS.
HF	FIRE ALARM HORN/FLASHING LIGHT (ADA APPROVED), WALL MOUNTED - SEE SPECIFICATIONS. CANDELA RATING AS REQUIRED TO MEET ADA COVERAGE REQUIREMENTS.
HF	FIRE ALARM HORN/FLASHING LIGHT (ADA APPROVED), CEILING DEVICE SEE SPECIFICATIONS. CANDELA RATING AS REQUIRED TO MEET ADA COVERAGE REQUIREMENTS.
F	FIRE ALARM FLASHING LIGHT (ADA APPROVED), WALL MOUNTED - SEE SPECIFICATIONS. CANDELA RATING AS REQUIRED TO MEET ADA COVERAGE REQUIREMENTS.
F	FIRE ALARM FLASHING LIGHT (ADA APPROVED), CEILING MOUNTED DEVICE - SEE SPECIFICATIONS. CANDELA RATING AS REQUIRED TO MEET ADA COVERAGE REQUIREMENTS.
F E / F E	SMOKE/CO ALARM STROBE LIGHT - 120V, WALL/CEILING MOUNTED. DEVICE TO BE USED IN CONJUNCTION WITH A 120V SMOKE/CO ALARM DEVICE. UNIT SHALL BE LISTED PER UL1971. BRK #SL177.
SF	FIRE ALARM SPEAKER/FLASHING LIGHT, WALL MOUNTED - SEE SPECIFICATIONS.
SF	FIRE ALARM SPEAKER/FLASHING LIGHT, CEILING MOUNTED DEVICE - SEE SPECIFICATIONS.
S	FIRE ALARM SPEAKER, CEILING MOUNTED - SEE SPECIFICATIONS.
S	FIRE ALARM SPEAKER, WALL MOUNTED - SEE SPECIFICATIONS.
B	FIRE ALARM BELL - SEE SPECIFICATIONS.
MS	FIRE ALARM MANUAL PULL STATION, WALL MOUNTED - SEE SPECIFICATIONS.
MS PA	FIRE ALARM DUAL ACTION/PREACTION RELEASING STATION, WALL MOUNTED - SEE SPECIFICATIONS.
SD	FIRE ALARM SMOKE DETECTOR, CEILING MOUNTED - SEE SPECIFICATIONS.
SD E	STAND ALONE SMOKE DETECTORS: AREA SMOKE DETECTORS FOR THE CONTROL OF COMBINATION SMOKE/FIRE DAMPERS (CSFD'S) SHALL BE GENTEX MODEL 8100PY (CSFM #7272-0569:102). THE DETECTORS SHALL BE 120VAC POWERED AND SHALL NOT CONNECT TO THE FIRE ALARM PANEL. THE DETECTORS SHALL PROVIDE AN AUDIBLE AND VISUAL INDICATION AND SHALL AUTOMATICALLY CAUSE THE RESPECTIVE CSFD'S TO CLOSE. THE DETECTORS SHALL INCORPORATE A SELF RESETTING FEATURE WHEN SMOKE HAS CLEARED. THE AREA SMOKE DETECTORS SHALL BE INSTALLED IN ACCORDANCE WITH NFPA 90A AND APPLICABLE SECTIONS OF NFPA 72 - AND ARE ONLY ALLOWED WHEN SPECIFICALLY SHOWN ON PLANS.
SC E	SMOKE/CO ALARM DEVICE - 120V. 120V SINGLE/MULTIPLE STATION SMOKE AND CARBON MONOXIDE SENSOR WITH MONITORED 9V BATTERY BACKUP. DEVICE TO HAVE DISTINCT SMOKE AND CO SENSORS AND SOUND PATTERNS. UNIT SHALL BE U.L. LISTED PER UL217 AND UL2034. BRK #SC9120B. IF THIS DEVICE IS TO BE SUPERVISED - CONNECT VIA A BRK #RM4 RELAY.
SC	SMOKE/CO ALARM DEVICE - ADDRESSABLE. SMOKE AND CARBON MONOXIDE SENSOR MOUNTED TO AN ADDRESSABLE SOUNDER BASE. UNIT SHALL BE U.L. LISTED PER UL268 AND UL2075.
SA E	SMOKE ALARM DEVICE - 120V. 120V SINGLE/MULTIPLE STATION SMOKE ALARM WITH MONITORED 9V BATTERY BACKUP. DEVICE TO HAVE DISTINCT SMOKE SENSOR AND SOUND PATTERNS. UNIT SHALL BE U.L. LISTED PER UL217 AND UL2034. BRK #SC9120. IF THIS DEVICE IS TO BE SUPERVISED - CONNECT VIA A BRK #RM4 RELAY.
SA	FIRE ALARM SMOKE DETECTOR, CEILING MOUNTED TO AN ADDRESSABLE SOUNDER BASE - SEE SPECIFICATIONS.
ID	FIRE ALARM SMOKE DETECTOR, IN-DUCT - SEE SPECIFICATIONS.
RA	FIRE ALARM SMOKE DETECTOR, RETURN AIR - SEE SPECIFICATIONS.
DD	FIRE ALARM DUCT DETECTOR PHOTOELECTRIC TYPE - SEE SPECIFICATIONS.
DD E	STAND ALONE DUCT DETECTORS: DUCT DETECTORS SHALL BE PROVIDED ON THE SUPPLY OF EACH AIR HANDLER EXCEEDING 2,000 CFM OR ALL AIR HANDLERS SERVING A COMMON AREA WHERE THEIR COMBINED SUPPLY EXCEEDS 2,000 CFM. THE DUCT DETECTORS SHALL BE SYSTEM SENSOR MODEL D4120, PHOTOELECTRIC TYPE (CSFM #3240-1653:207). THE DUCT SMOKE DETECTOR SHALL CAUSE THE RESPECTIVE AIR HANDLER UNIT TO AUTOMATICALLY SHUTDOWN. THE DUCT SMOKE DETECTOR SHALL BE PROVIDED WITH A REMOTE TEST/RESET INDICATOR, SYSTEM SENSOR MODEL #RTS2 (CSFM #7135-1653:196). THE TEST INDICATOR SHALL PROVIDE AUDIBLE AND VISUAL ALARM INDICATION AND SHALL PROVIDE MEANS TO RESET THE DUCT DETECTOR. THE DUCT SMOKE DETECTORS SHALL BE INSTALLED IN ACCORDANCE WITH NFPA 90A AND APPLICABLE SECTIONS AND OF NFPA 72 - AND ARE ONLY ALLOWED WHEN SPECIFICALLY SHOWN ON PLANS.
HD	FIRE ALARM HEAT DETECTOR, CEILING MOUNTED - SEE SPECIFICATIONS.
BT	FIRE ALARM BEAM DETECTOR - TRANSMITTER - MOUNTED AS INDICATED ON PLANS.
BR	FIRE ALARM BEAM DETECTOR - RECEIVER - MOUNTED AS INDICATED ON PLANS.
W	FIRE ALARM FLOW SWITCH - SEE SPECIFICATIONS.
T	FIRE ALARM TAMPER SWITCH - SEE SPECIFICATIONS.
PV	FIRE ALARM POST INDICATING VALVE/OS&Y/DOUBLE BACK CHECK VALVE - SEE SPECIFICATIONS.
M	FIRE ALARM SYSTEM MONITOR MODULE - SEE SPECIFICATIONS.
C	FIRE ALARM SYSTEM CONTROL MODULE - SEE SPECIFICATIONS.
CR	FIRE ALARM SYSTEM CONTROL RELAY MODULE - SEE SPECIFICATIONS.
R	CA FIRE MARSHAL-LISTED FIRE ALARM RELAY - SEE SPECIFICATIONS.
	FIRE ALARM MAGNETIC HOLD OPEN DEVICE - SEE SPECIFICATIONS.
I	FIRE ALARM REMOTE L.E.D. INDICATOR. IF REQUIRED BY AHJ, PROVIDE REMOTE LED WITH TEST STATION.
PH	FIRE ALARM SYSTEM FIREMANS PHONE JACK - SEE SPECIFICATIONS.
—— FA ——	FIRE ALARM BRANCH CIRCUIT PER FIRE ALARM WIRING DIAGRAMS & SPECIFICATIONS.
	FIRE ALARM END-OF-LINE RESISTOR - SEE SPECIFICATIONS.

Copyright © 2025

All ideas, designs, arrangements and plans indicated or represented by this drawing are owned by, and the property of, NICHOLS, MELBURG and ROSSETTO and were created, evolved and developed for use on, and in conjunction with, the specified project. None of such ideas, designs, arrangements or plans shall be used by, or disclosed to any person, firm or corporation for any purpose whatsoever without the written permission of NICHOLS, MELBURG and ROSSETTO.

NICHOLS MELBURG & ROSSETTO
ARCHITECTS + ENGINEERS
300 KNOLLCREST DRIVE
REDDING, CA. 96002
(530) 222-3300 (530) 222-3538 FAX
http://www.nmrdesign.com

CONSULTANTS

tk1sc
Member of WSP
11870 Pierce Street, Suite 160
Riverside, California 92505
951.299.4160 www.tk1sc.com
Project Leader - Jerry Leonhardt
Electrical Lead - Jerry Leonhardt
WSP Job #: B2305166.000

LICENSE STAMPS

REGISTERED PROFESSIONAL ENGINEER
RAYMOND W. SWARTZ
No. E15610
Exp. 12/31/2025
ELECTRICAL
STATE OF CALIFORNIA

PROJECT NAME

TEHAMA COUNTY
CORNING
VETERAN'S HALL

1620 SOLANO ST.
CORNING, CA

SHEET TITLE

CENTRAL MONITORING SYSTEM SPEC & SYMBOL LIST

DRAWING STATUS

CONSTRUCTION DOCUMENTS

REVISIONS

Sym.	Description	Date

Drawn By	
Date Issued	2/13/2025
Scale	-
Project No.	21-6497

SHEET No.

FA0.0

Login Name: USGL700366
Plot Date: February 13, 2025 - 9:41 am
File Name: P:\2023\B2305166.000 Corning Veterans Hall Remod\Drawings and Models\CAD\Electrical\FA0-0.dwg
XREFS: x-CVH_Title Block

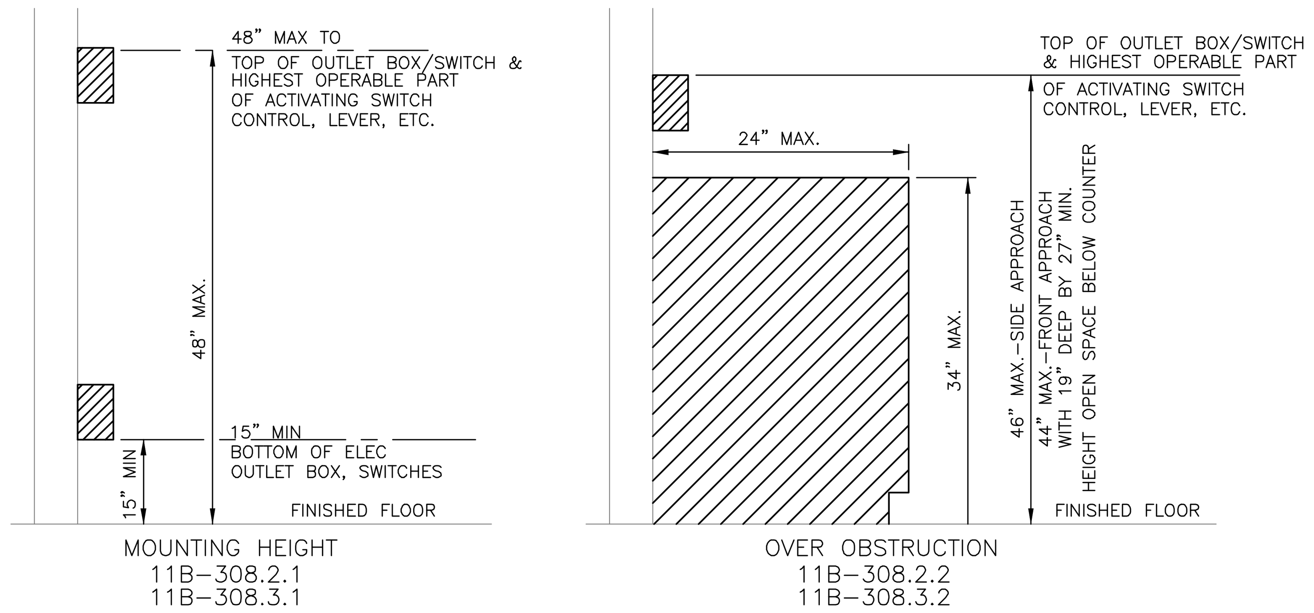

ALL DEVICE HEIGHTS DEPICTED SHALL BE MODIFIED AS REQUIRED BY GOVERNING BUILDING CODES. CONTRACTOR TO VERIFY/RECONCILE APPLICABLE CODE REQUIREMENTS AND ANY DEVICE HEIGHT REQUIREMENTS DEPICTED ON ARCHITECTURAL OR INTERIOR DESIGN PLANS & SPECIFICATIONS PRIOR TO DEVICE ROUGH-IN. CONFLICTS OR LACK OF MOUNTING HEIGHT SPECIFICITY ON THE ARCHITECTURAL OR INTERIOR DESIGN PLANS & SPECIFICATIONS SHALL BE CAUSE FOR THE CONTRACTOR TO ISSUE A FORMAL WRITTEN RFI FOR RESOLUTION. DEVICE MOUNTING HEIGHT CLARIFICATIONS/SPECIFICATIONS SHALL NOT RESULT IN AN ADDITIONAL COST TO THE OWNER – CONTRACTOR SHALL INCLUDE ALL COSTS IN BASE BID.

MOUNTING HEIGHT OVER OBSTRUCTION DETAIL (12)

SCALE: NTS

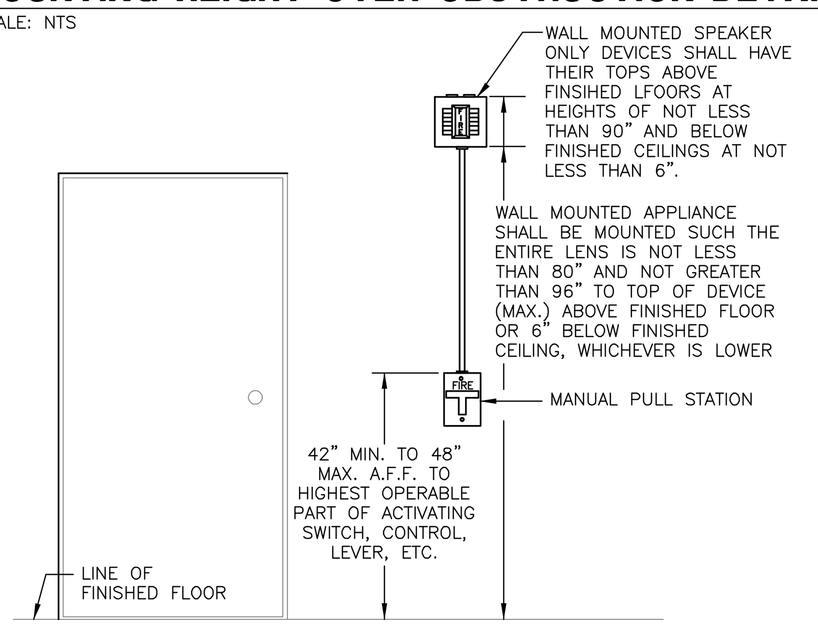

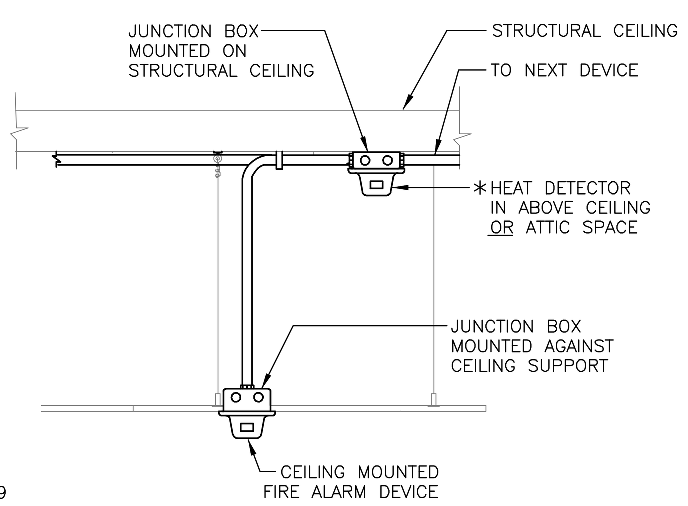

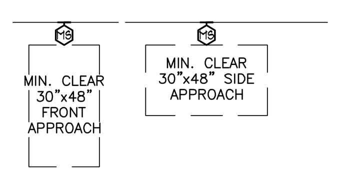

** NOTE: PER ADAAG, 4.27.4 & CBC, 11B-309 CONTROLS AND OPERATING MECHANISMS AT INITIATING DEVICE "SHALL BE OPERABLE WITH ONE HAND AND SHALL NOT REQUIRE TIGHT GRASPING, PINCHING OR TWISTING OF THE WRIST. THE FORCE REQUIRED TO ACTIVATE CONTROLS SHALL BE NO GREATER THAN 5lbf (22.2N)."

* – TEMPERATURE SETTING OF HEAT DETECTOR DEVICE TO BE SET AT MINIMUM OF 20°F. ABOVE THE MAXIMUM EXPECTED TEMPERATURE OF THE SPACE INSTALLED PER NFPA 72, 17.6.2.3.

DEVICE MOUNTING DETAILS (11)

SCALE: N.T.S.

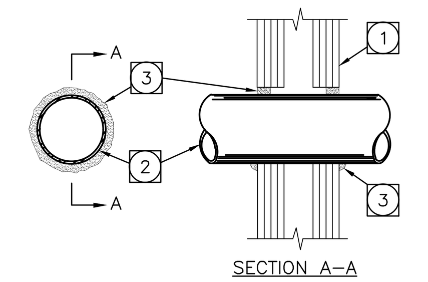

PENETRATION THRU GYPSUM BOARD WALL

NO SCALE

System No.W-L-1252
January 22, 2015
F Ratings – 1, 2, 3 and 4 Hr (See Items 1 and 3)
T Ratings – 0 Hr
L Rating At Ambient – less than 1 CFM/sq ft
L Rating At 400 F – less than 1 CFM/sq ft

1. Wall Assembly – The 1, 2, 3 or 4 hr fire-rated gypsum wallboard/stud wall assembly shall be constructed of the materials and in the manner described in the individual U400, V400 or W400 Series Wall or Partition Designs in the UL Fire Resistance Directory and shall include the following construction features:
   A. Studs – Wall framing may consist of steel channel studs. Steel studs to be min 3-1/2 in. (89 mm) wide by 1-3/8 in. (35 mm) deep channels spaced max 24 in. (610 mm) OC.
   B. Gypsum Board* – Nom 1/2 or 5/8 in. (13 or 16 mm) thick, 4 ft. (122 cm) wide with square or tapered edges. The gypsum wallboard type, thickness, number of layers, fastener type and sheet orientation shall be as specified in the individual U300 or U400 Series Design in the UL Fire Resistance Directory. Max diam of opening is 26 in. (660 mm).
   The hourly F and FH Ratings of the firestop system are equal to the hourly fire rating of the wall assembly in which it is installed.

2. Through Penetrant – One metallic pipe, conduit or tube to be installed either concentrically or eccentrically within the firestop system. The annular space between the pipe, conduit or tube and periphery of opening shall be min 0 in. (point contact) to max 7/8 in. (22 mm). Pipe, conduit or tube to be rigidly supported on both sides of wall assembly.
   A. Steel Pipe – Nom 4 in. (102 mm) diam (or smaller) Schedule 10 (or heavier) steel pipe.
   B. Iron Pipe – Nom 4 in. (102 mm) diam (or smaller) cast or ductile iron pipe.
   C. Conduit – Nom 4 in. (102 mm) diam (or smaller) rigid steel conduit.
   D. Conduit – Nom 4 in. (102 mm) diam (or smaller) steel electrical metallic conduit.
   E. Copper Tubing – Nom 4 in. (102 mm) diam (or smaller) Type L (or heavier) copper tubing.
   F. Copper Pipe – Nom 4 in. (102 mm) diam (or smaller) Regular (or heavier) copper pipe.

3. Fill, Void or Cavity Material* – Sealant – 1. Fill material applied within annulus , flush with both surfaces of wall. Type and thickness of sealant is dependent on F and FH Ratings as indicated in Table below. An additional 1/2 in. (13 mm) diameter bead of sealant applied at penetrant/gypsum board interface at point contact location on both surfaces of wall.
HILTI CONSTRUCTION CHEMICALS, DIV OF HILTI INC –– FS-ONE Sealant, FS-ONE MAX Intumescent Sealant or CP 606 Sealant

F, FH RATINGS (HR)	SEALANT TYPE	SEALANT THICKNESS, IN. (MM)
1,2	FS-ONE, FS-ONE MAX OR CP 606	5/8 (16)
3	FS-ONE, FS-ONE MAX OR CP 606	1 (25)
4	FS-ONE, FS-ONE MAX	1 (25)

*Bearing the UL Classification Marking

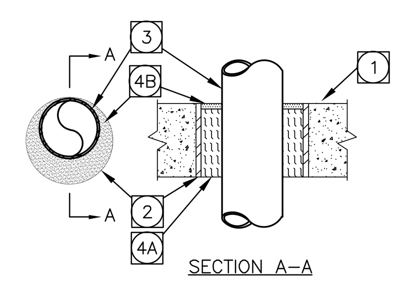

PENETRATION THRU CONCRETE WALL OR FLOOR

NO SCALE

System No. C-AJ-1630
DECEMBER 20, 2013
F Ratings – 2, 3, and 4 Hr (See Item 4)
T Rating – 0 Hr
L Rating At Ambient – less than 1 CFM/sq ft
L Rating At 400 F – less than 1 CFM/sq ft
W Rating – Class I (See Item 4)

1. Floor or Wall Assembly – 1. See Configuration A above. Reinforced lightweight or normal weight (100-150 pcf or 1600-2400 kg/cu meter) concrete as specified in the Table in Item 4 below. Wall may also be constructed of any UL Classified Concrete Blocks'. Max diam of sleeved opening is 32 in. (813 mm).
See Concrete Blocks (CAZT) category in the Fire Resistance Directory for names of manufacturers.

1A. Floor Assembly – See Configuration B above. Min 6 in. (152 mm) thick UL Classified hollow-core Precast Concrete Units'. Max diam of opening is 7 in. (178 mm).
See Precast Concrete Units (CFTV) category in the Fire Resistance Directory for names of manufacturers.

2. Steel Sleeve (Optional) – Nom 32 in. (813 mm) diam (or smaller) Schedule 10 (or heavier) steel pipe sleeve cast or grouted into floor or wall assembly, flush with both surfaces of floor or wall. As an option, sleeve may extend max 2 in. above top surface of floor or beyond one or both surfaces of wall. Steel sleeve may be used in 2 and 3 hr F Rated systems only.

3. Through Penetrants – One metallic pipe, conduit or tubing to be installed either concentrically or eccentrically within the firestop system. Pipe, conduit or tubing to be rigidly supported on both sides of floor or wall assembly. See Table in Item 4 for sizes of penetrants A, B, D and E that may be used. See Item 3C below for size of conduit that may be used. The annular space shall be as specified in Table in Item 4 below. The following types and sizes of metallic pipes, conduits or tubing may be used:
   A. Steel Pipe – –– Schedule 10 (or heavier) steel pipe.
   B. Iron Pipe – Cast or ductile iron pipe.
   C. Conduit – Nom 4 in. (102 mm) diam (or smaller) steel electrical metallic tubing or nom 6 in. (152 mm) diam (or smaller) steel conduit.
   D. Copper Tubing – Type L (or heavier) copper tubing.
   E. Copper Pipe – Regular (or heavier) copper pipe.

4. Firestop System – The F Rating of the system is dependent upon the type of concrete, thickness of concrete, annular space, fill and packing material thickness, packing material density and penetrant size as shown in the Table below. W Rating applies to annular spaces of min 0 in. (point contact) to max 1-7/8 in. and to Configuration A detail only.

F RATING HR	MIN THICK CONCRETE IN.	ANNULAR SPACE IN.	MIN THICK PACKING MTL IN.	MIN DENSITY PACKING MTL PCF KG/CU MTR	MIN THICK FILL MTL IN.	PENETRANT SIZE IN. DIAM (OR SMALLER) D,E COPPER	A,B STEEL IRON
2	5-1/2(140)	0 TO 1-7/8 (0 TO 48)	5 (127)	4 (64)	1/2 (13)	4 (102)	16 (406)
3	4-1/2(114)	0 TO 2-1/8 (0 TO 54)	4-1/4 (108)	4 (64)	1/4 (6)	6 (152)	30 (762)
4	5-1/2(140)	0 TO 1-7/8 (0 TO 48)	5 (127)	4 (64)	1/2 (13)	4 (102)	8 (203)

A. Packing Material –– Min 4-1/4 or 5 in. (108 or 127 mm) thickness of min 4.0 pcf (64 kg/cu meter) mineral wool batt insulation firmly packet into opening as a permanent form as specified in the Table above. Packing material to be recessed from top surface of floor or top end of sleeve, or from both surfaces of wall or ends of sleeve, as required to accommodate the required thickness of fill material. For hollow-core floor applications as shown in Configuration B, one half of the required thickness of mineral wool packing material shall be installed flush with the bottom surface of the floor and the remaining half of the mineral wool packing material installed at the top of the opening and recessed from the top surface of the floor to accommodate the required thickness of the fill material.

B. Fill, Void or Cavity Material' –– Caulk –– Min 1/4 or 1/2 in. (6 or 13 mm) thickness of fill material as specified in the Table above applied within the annulus, flush with top surface of floor or top end of sleeve, or with both surfaces of wall or ends of sleeve. At the point contact location beMeen pipe and concrete or sleeve, a min 1/2 in. (13 mm) diam bead of fill material shall be applied. As an option, for hollow-core floors, the packing material (Item 4A) on the bottom surface of the floor may be recessed to accommodate a 1/4 in. (6 mm) depth of fill material installed flush with bottom surface of floor.
HILTI CONSTRUCTION CHEMICALS, DIV OF HILTI INC –– CFS-S SIL GG (floors or walls) and CFS-S SIL SL (floors only)

'Bearing the UL Classification Mark

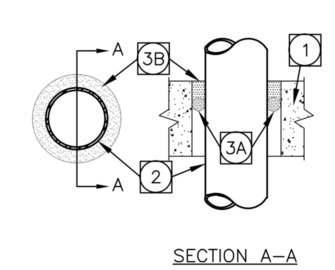

PENETRATION THRU CONCRETE FLOOR

NO SCALE

SYSTEM NO C-AJ-1276
April 20, 2012
F RATING-3 HR
T RATING-0 HR

Floor or Wall Assembly – 1. Floor or Wall Assembly –– Min 4-1/2 in. (114 mm) thick reinforced lightweight or normal weight (100-150 pcf or 1600-2400 kg/m3) concrete. Wall may also be constructed of any UL Classified Concrete Blocks*. Max diam of opening is 6 in. (152 mm).

See Concrete Blocks (CAZT) category in the Fire Resistance Directory for names of manufacturers.

2. Through Penetrants – One metallic pipe, conduit or tubing to be centered within the firestop system. A nom annular space of 3/4 in. (19 mm) is required within the firestop system. Pipe, conduit or tubing to be rigidly supported on both sides of floor or wall assembly. The following types and sizes of metallic pipes, conduits or tubing may be used:
   A. Steel Pipe – Nom 4 in. (102 mm) diam (or smaller) Schedule 10 (or heavier) steel pipe.
   B. Conduit – Nom 4 in. (102 mm) diam (or smaller) steel electrical metallic tubing or steel conduit.

3. Firestop System – The firestop system shall consist of the following:
A. Packing or Forming Materials –– Optional –– One of the following packing or forming materials may be used:

A1. Foam Backer Rod –– Foam backer rod tightly packed into the opening as a permanent form. Packing material to be recessed from the top surface of floor or both surfaces of wall as required to accommodate the required thickness of putty.

A2. Mineral Wool Batt Insulation –– Min 4 pcf (64 kg/m3), tightly packed into the opening as a permanent form. Packing material to be recessed from the top surface of floor or both surfaces of wall as required to accommodate the required thickness of putty.

A3. Forming Material* –– Forming material to be foamed into the opening as a permanent form. Forming material to be recessed from the top surface of floor or both surfaces of wall as required to accommodate the required thickness of putty.
HILTI CONSTRUCTION CHEMICALS, DIV OF HILTI INC –– CF812 or CF-AS CJP Foam Sealant

B. Fill, Void or Cavity Material* –– Putty –– Min 1 in. (25 mm) thickness of putty applied within the annulus, flush with top surface of floor or with both surfaces of wall.
HILTI CONSTRUCTION CHEMICALS, DIV OF HILTI INC –– CP 618 Firestop Putty Stick

*Bearing the UL Classification Mark

THROUGH RATED WALL OR FLOOR PENETRATIONS (U.L. LISTINGS) (10)

SCALE: N.T.S.

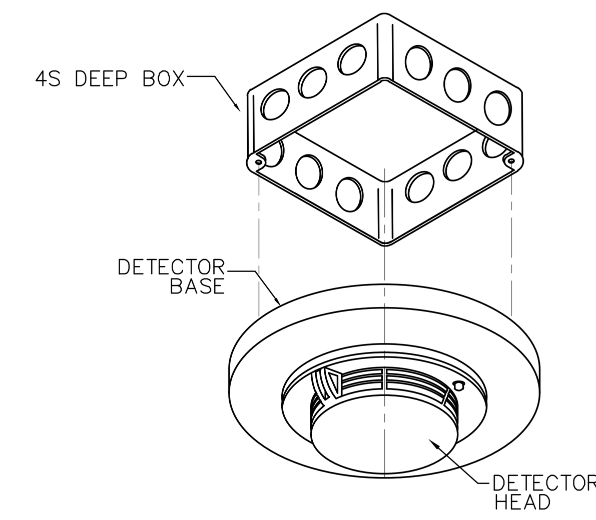

DETECTOR MOUNTING DETAIL (8)

SCALE: N.T.S.

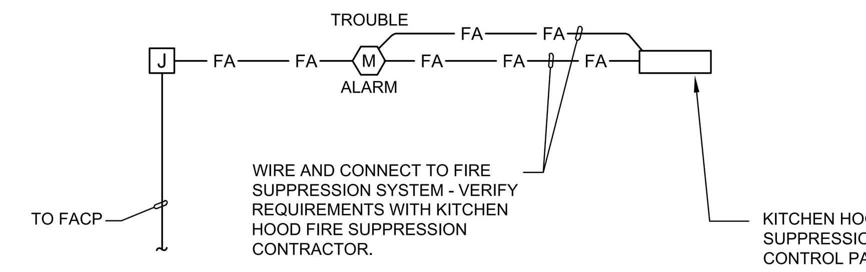

KITCHEN HOOD FIRE SUPPRESSION SYSTEM SCHEMATIC (7)

SCALE: N.T.S.

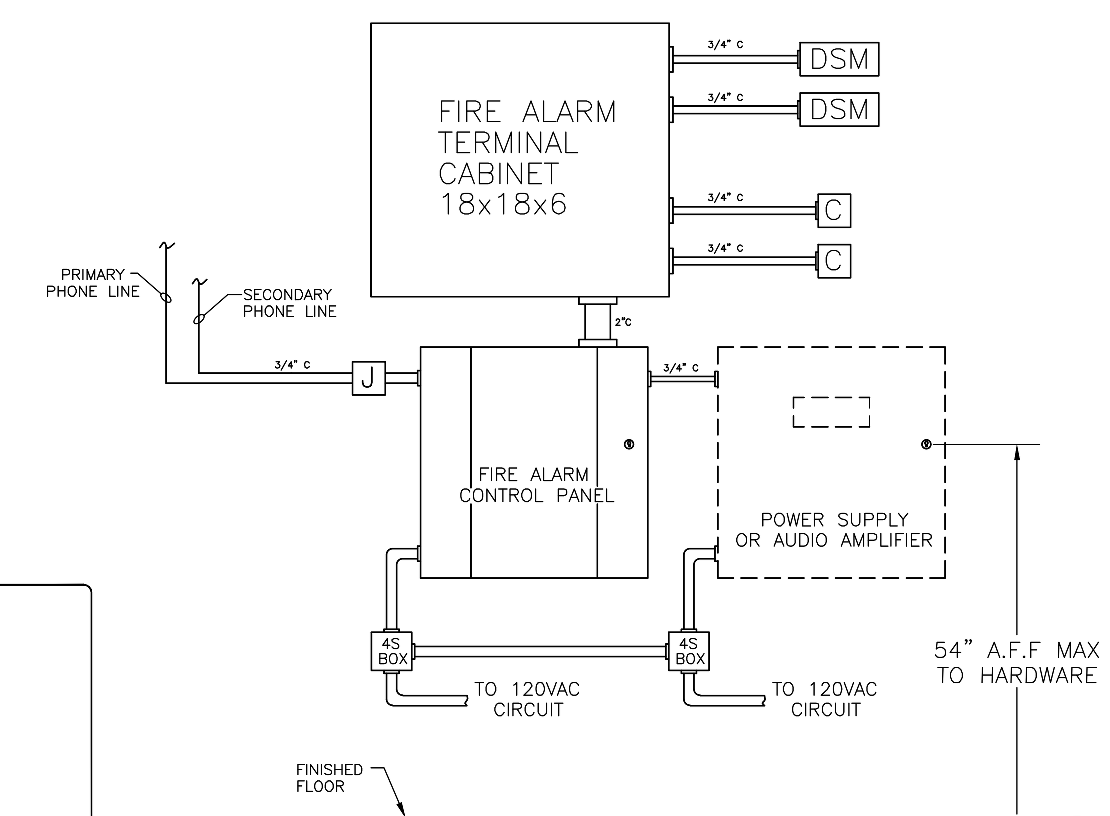

FIRE ALARM PANEL/POWER SUPPLY MOUNTING ELEVATION (6)

SCALE: N.T.S.

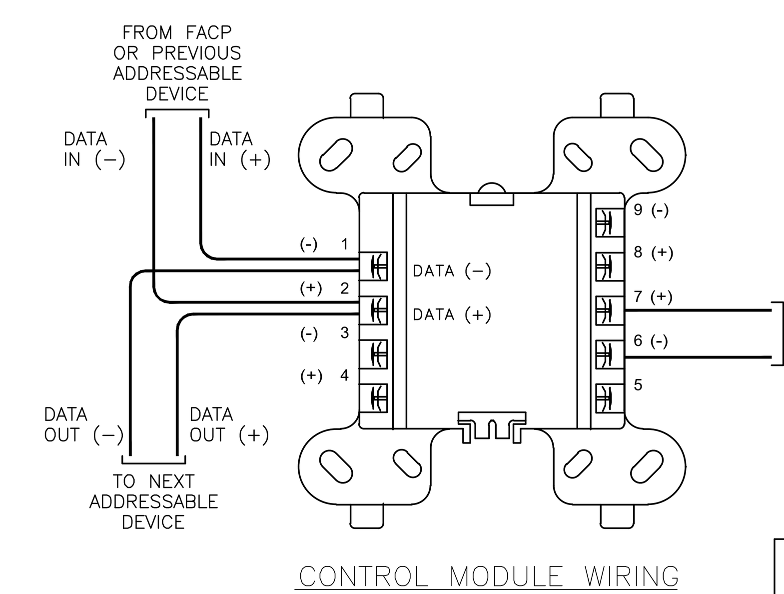

CONTROL MODULE WIRING

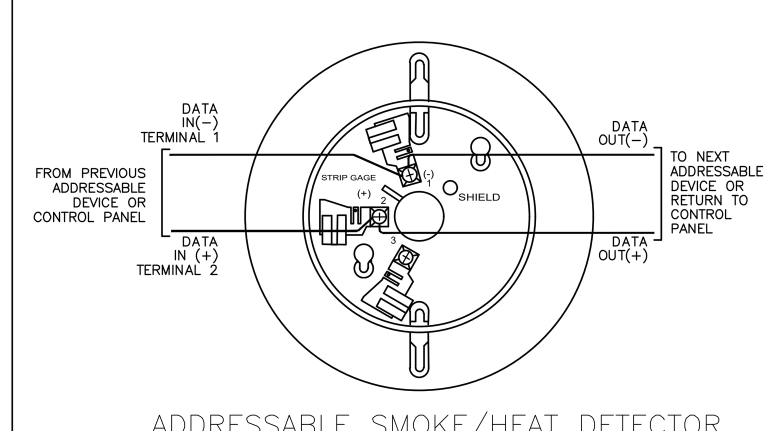

ADDRESSABLE SMOKE/HEAT DETECTOR

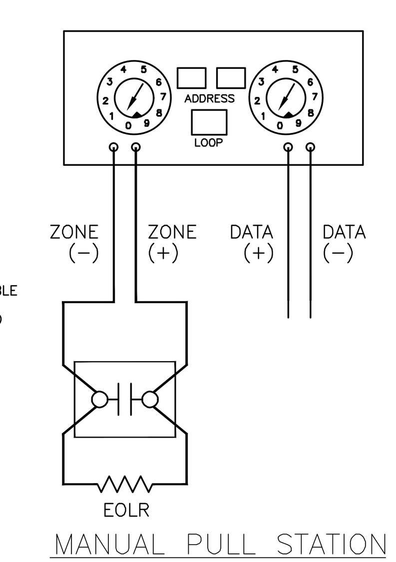

MANUAL PULL STATION

DEVICE WIRING DETAILS (5)

SCALE: N.T.S.

FIRE ALARM DEFERRED SUBMITTAL

MANUAL ADDRESSABLE FIRE ALARM SYSTEM

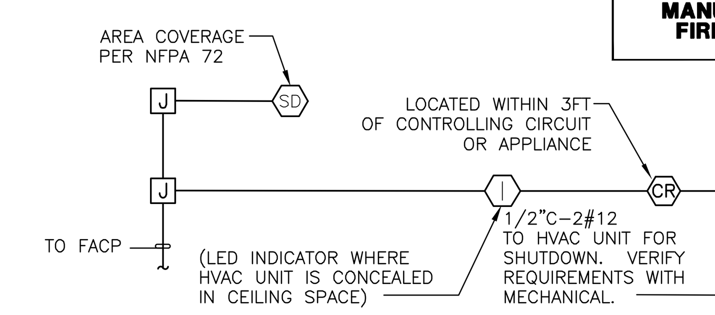

HVAC SHUT DOWN SCHEMATIC (AREA COVERAGE) (4)

SCALE: N.T.S.

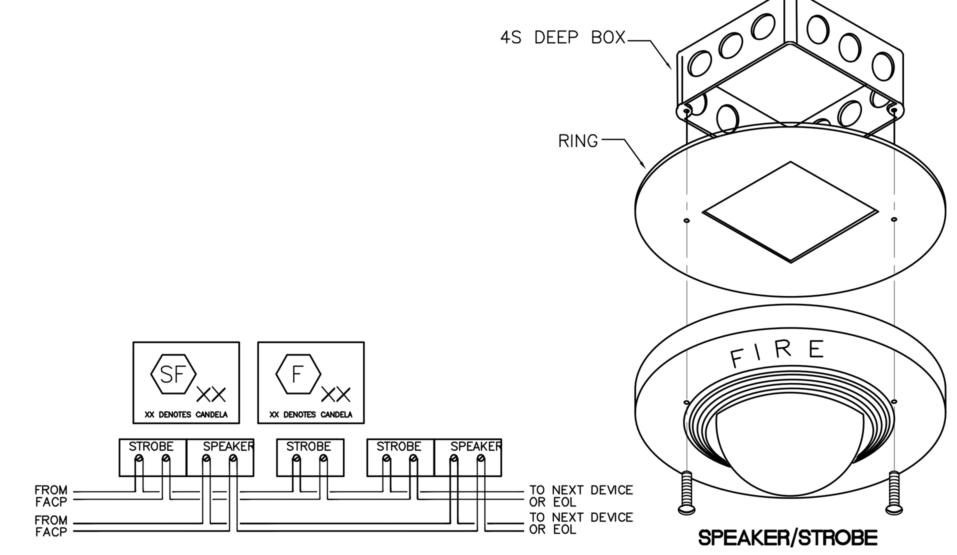

CEILING MTD. AUDIBLE/VISUAL (3)

SCALE: N.T.S.

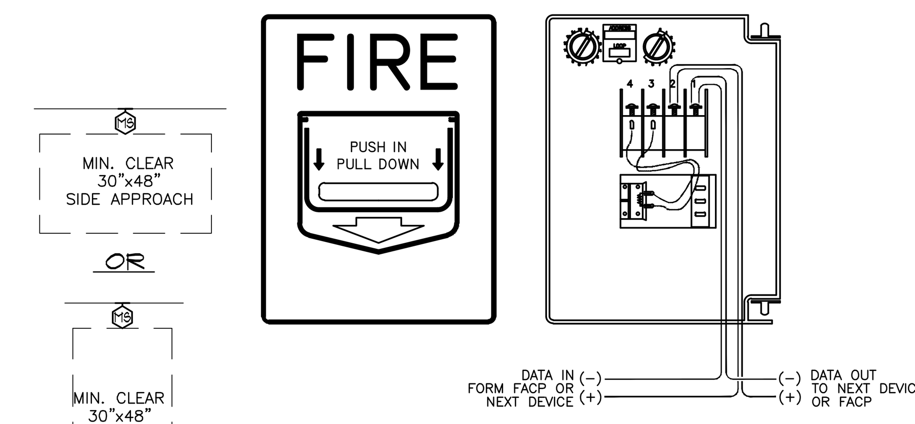

NOTE: PER ADAAG, 4.27.4 & CBC, 11B-309 & CFC, 907.4.2

CONTROLS AND OPERATING MECHANISMS AT INITIATING DEVICE "SHALL BE OPERABLE WITH ONE HAND AND SHALL NOT REQUIRE TIGHT GRASPING, PINCHING OR TWISTING OF THE WRIST. THE FORCE REQUIRED TO ACTIVATE CONTROLS SHALL BE NO GREATER THAN 5lbs (22.2N)."

PULL STATION DETAIL (2)

SCALE: N.T.S.

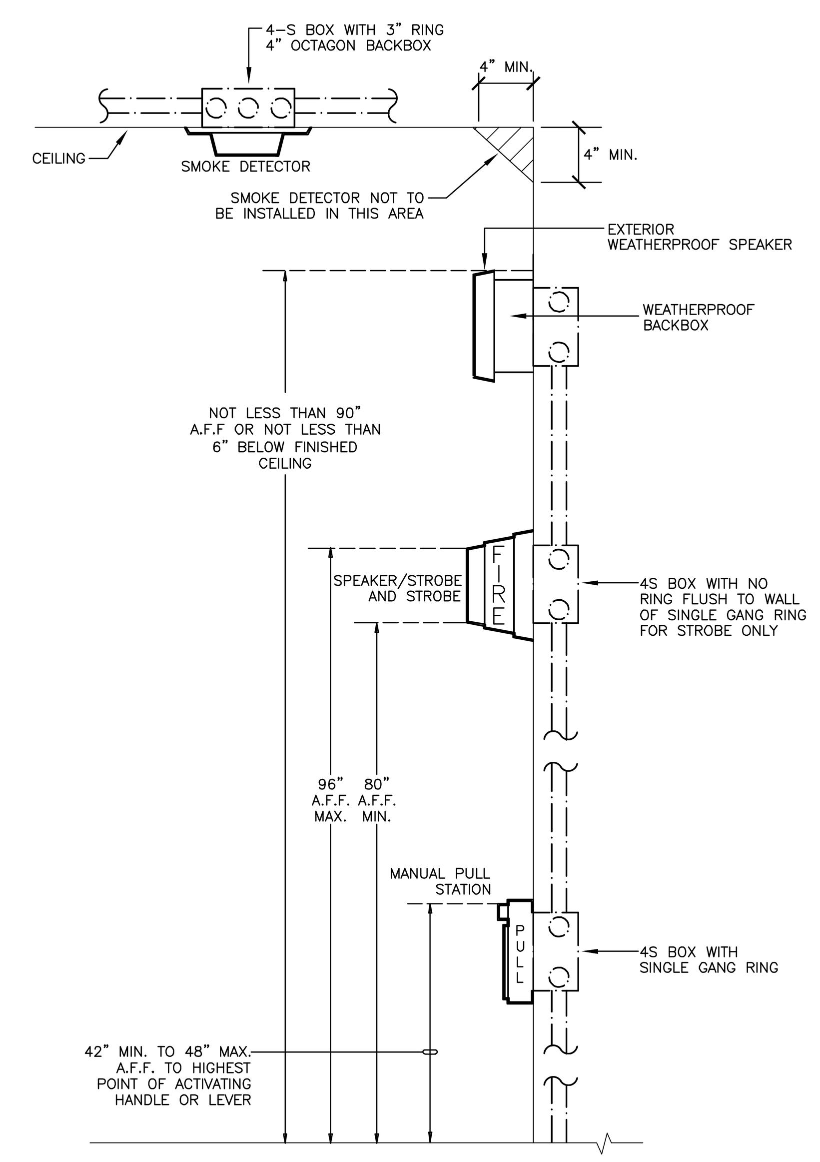

GENERAL NOTES:

1. THE ENTIRE LENS OF STROBE LIGHTS MUST BE BETWEEN 80" AND 96" ABOVE FLOOR FINISH. (NFPA 72, 18.5.5)
2. MANUAL FIRE ALARM BOXES SHALL BE INSTALLED IN ACCORDANCE WITH CFC, SECTIONS 907.4 THROUGH 907.5.
3. WHEN APPLICABLE, MANUAL FIRE ALARM BOXES SHALL BE LOCATED NOT MORE THAN 5 FEET FROM THE ENTRANCE TO EACH EXIT. ADDITIONAL MANUAL FIRE ALARM BOXES SHALL BE LOCATED SO THAT TRAVEL DISTANCE TO THE NEAREST BOX DOES NOT EXCEED 200 FEET. (CFC, 907.4.2.1)

MOUNTING HEIGHT DETAIL (1)

SCALE: N.T.S.

Copyright © 2025

All ideas, designs, arrangements and plans indicated or represented by this drawing are owned by, and the property of, NICHOLS, MELBURG and ROSSETTO and were created, evolved and developed for use on, and in conjunction with, the specified project. None of such ideas, designs, arrangements or plans shall be used by, or disclosed to any person, firm or corporation for any purpose whatsoever without the written permission of NICHOLS, MELBURG and ROSSETTO.

NICHOLS MELBURG & ROSSETTO
ARCHITECTS + ENGINEERS
300 KNOLLCREST DRIVE
REDDING, CA. 96002
(530) 222-3300 (530) 222-3538 FAX
http://www.nmrdesign.com

CONSULTANTS

tk1sc
Member of WSP
11870 Pierce Street, Suite 160
Riverside, California 92505
951.299.4160 www.tk1sc.com
Project Leader - Jerry Leonhardt
Electrical Lead - Jerry Leonhardt
WSP Job #: B2305166.000

LICENSE STAMPS

REGISTERED PROFESSIONAL ENGINEER RAYMOND W. SWARTZ No. E15610 Exp. 12/31/2025 ELECTRICAL STATE OF CALIFORNIA

PROJECT NAME

TEHAMA COUNTY CORNING VETERAN'S HALL

1620 SOLANO ST.
CORNING, CA

SHEET TITLE

FIRE ALARM DETAILS

DRAWING STATUS

CONSTRUCTION DOCUMENTS

REVISIONS

Sym.	Description	Date

Drawn By	
Date Issued	2/13/2025
Scale	-
Project No.	21-6497

SHEET No.

FA0.1

Login Name: USGL700366
Plot Date: February 13, 2025 - 9:41 am
File Name: P:\2023\B2305166.000 Corning Veterans Hall Remod\Drawings and Models\CAD\Electrical\FA0-1dwg
XREFS: x-CVH_Title Block

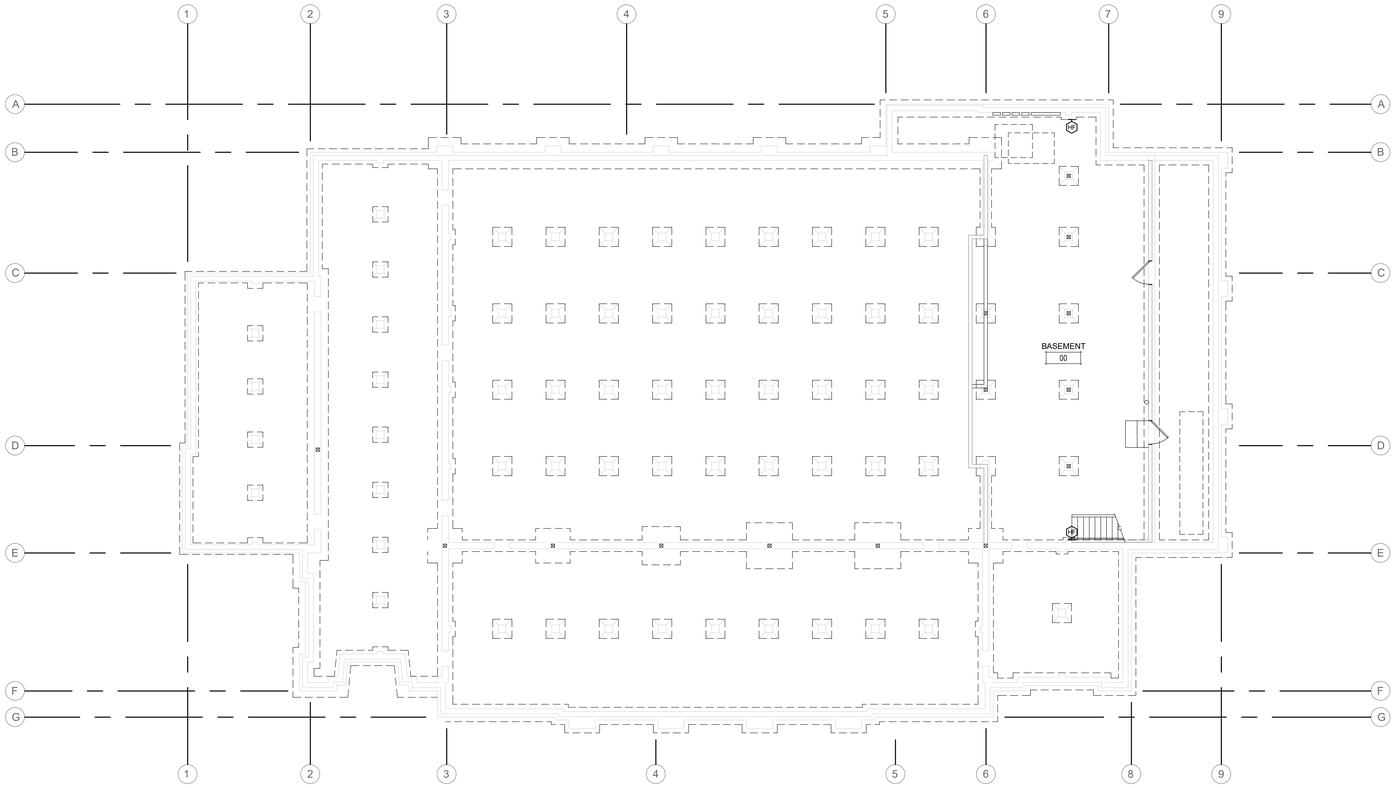

FIRE ALARM FLOOR PLAN - BASEMENT

SCALE: 1/8" = 1'-0"

PLAN NOTES:

1 -

FIRE ALARM PLAN GENERAL NOTES:

1. NOTIFICATION DEVICES IN ROOMS CONTAINING (2) OR MORE AUDIBLE AND/OR (2) OR MORE VISUAL DEVICES SHALL BE SYNCHRONIZED PER NFPA 72. THIS SHALL INCLUDE AUDIBLE AND VISUAL DEVICES LOCATED IN ADJACENT/ADJOINING SPACES.

2. DO NOT DEVIATE FROM CONDUIT RUNS AS SHOWN ON FLOOR PLANS WITHOUT PRIOR APPROVAL FROM SYSTEM SUPPLIER / ENGINEER. FACTORS SUCH AS EXCESSIVE VOLTAGE DROP, ADDITIONAL PARTS, ENGINEERING, ETC. THAT ARE A RESULT OF CONDUIT RUN DEVIATIONS SHALL BE THE SOLE RESPONSIBILITY OF THE CONTRACTOR.

3. DETECTORS SHALL NOT BE LOCATED IN A DIRECT AIR-FLOW, NOR CLOSER THAN 3 FEET (915 mm) FROM ANY AIR SUPPLY DIFFUSER.

4. THE AUDIBLE ALARM NOTIFICATION APPLIANCES SHALL PROVIDE A SOUND PRESSURE LEVEL OF 15 dBA ABOVE THE AVERAGE AMBIENT SOUND LEVEL OR 5 dBA ABOVE THE MAXIMUM SOUND LEVEL HAVING DURATION OF AT LEAST 60 SECONDS, WHICHEVER IS GREATER, IN EVERY OCCUPIED SPACE WITHIN THE BUILDING PER CFC SECTION 907.5.2.1.1. THE MINIMUM SOUND PRESSURE LEVEL SHALL BE 60 dBA PER NFPA 72, TABLE A.18.4.3.

5. REFER TO ARCHITECTURAL EXTERIOR ELEVATIONS FOR PRECISE OUTLET LOCATIONS.

6. REFER TO ARCHITECTURAL REFLECTED CEILING PLAN FOR EXACT LOCATION OF ALL CEILING MOUNTED DEVICES.

7. IF SHIELDED WIRE IS USED, THE FOLLOWING MUST BE OBSERVED.
   - A. METALLIC CONTINUITY OF THE SHIELD MUST BE MAINTAINED AND INSULATED THROUGHOUT THE ENTIRE LENGTH OF THE CABLE.
   - B. THE ENTIRE LENGTH OF THE CABLE MUST HAVE A RESISTANCE GREATER THAN 1 MEGOHM TO EARTH.

8. ALL PENETRATIONS THROUGH FIRE RATED WALLS SHALL BE PROTECTED FROM THE SPREAD OF FIRE WITH AN APPROVED FIRE STOP SYSTEM EQUAL TO OR GREATER THAN THE FIRE RATING OF THE STRUCTURE / SURFACE BEING PENETRATED AS IDENTIFIED IN CBC CHAPTER 7, UL OR OTHER LAB TESTING CRITERIA. APPROVED TYPES OF MATERIALS SHALL BE IDENTIFIED WITHIN THE FIRE ALARM SECTION OF THE PROJECT SPECIFICATIONS.

9. A SYSTEM GROUND MUST BE PROVIDED FOR EARTH DETECTION AND LIGHTNING PROTECTION DEVICES. THIS CONNECTION SHALL BE MADE TO AN APPROVED DEDICATED EARTH CONNECTION PER CEC, ARTICLE 250.

10. WIRING IN DUCTS, PLENUMS AND OTHER AIR HANDLING SPACES MUST BE INSTALLED IN ACCORDANCE WITH CEC.

11. UNDERGROUND WIRING MUST BE FREE OF ALL WATER.

12. ALL FIRE ALARM SYSTEM CONDUCTORS SHALL BE RUN IN A DEDICATED FIRE ALARM CONDUIT SYSTEM.

13. WHERE A DETECTOR IS INDICATED TO BE INSTALLED ABOVE THE CEILING AND NO ACCESS TO THE CEILING SPACE EXISTS, THE ELECTRICAL CONTRACTOR SHALL FURNISH ACCESS PANELS. THE DETECTOR SHALL BE EASILY ACCESSIBLE AND THE LOCATION OF THE DETECTOR SHALL BE CLEARLY MARKED.

14. FIRE ALARM SYSTEM UTILIZES A MANUAL SYSTEM. PROVIDE RELAY MODULE(S) AT FATC/FACP. LOCATIONS FOR CONTROL OF HVAC SHUT DOWN, SMOKE/FIRE DAMPER CLOSURE AND DOOR HOLD RELEASES.

15. WHERE NEW DEVICES (AND ASSOCIATED CONDUIT) CANNOT PHYSICALLY BE MOUNTED CONCEALED IN WALLS, RUN IN PANDUIT SURFACE RACEWAY/WIREWAY (AND DEVICES SHALL BE MOUNTED ON SURFACE OUTLET BOXES). REFER TO SPECIFICATIONS. PROVIDE SIZE OF RACEWAY TO ACCOMMODATE THE REQUIRED CONDUCTORS. WHERE CONDUIT IS INDICATED, PROVIDE SURFACE RACEWAY WITH AN EQUAL CROSS SECTION TO THE DIAMETER OF THE CONDUIT INDICATED.

16. DETECTOR SENSITIVITY SHALL BE TESTED USING MANUFACTURER'S CALIBRATED SENSITIVITY INSTRUMENT OR OTHER CALIBRATED TESTING METHOD. (CFC, SECTIONS 907.8.3 AND 907.8.4)

FIRE ALARM DEFERRED SUBMITTAL

MANUAL ADDRESSABLE FIRE ALARM SYSTEM

Copyright © 2025

All ideas, designs, arrangements and plans indicated or represented by this drawing are owned by, and the property of, NICHOLS, MELBURG and ROSSETTO and were created, evolved and developed for use on, and in conjunction with, the specified project. None of such ideas, designs, arrangements and plans shall be used by or disclosed to any person, firm or corporation for any purpose whatsoever without the written permission of NICHOLS, MELBURG and ROSSETTO.

NICHOLS MELBURG & ROSSETTO
ARCHITECTS + ENGINEERS

300 KNOLLCREST DRIVE
REDDING, CA. 96002
(530) 222-3300 (530) 222-3538 FAX
http://www.nmrdesign.com

CONSULTANTS

tk1sc
Member of WSP
11870 Pierce Street, Suite 160
Riverside, California 92505
951.299.4160 www.tk1sc.com

Project Leader - Jerry Leonhardt
Electrical Lead - Jerry Leonhardt
WSP Job #: B2305166.000

LICENSE STAMPS

REGISTERED PROFESSIONAL ENGINEER
RICHARD W. SHAFFER
No. E15610
12/31/2025
ELECTRICAL
STATE OF CALIFORNIA

PROJECT NAME

TEHAMA COUNTY
CORNING
VETERAN'S HALL

1620 SOLANO ST.
CORNING, CA

SHEET TITLE

FIRE ALARM
FLOOR PLAN -
BASEMENT

DRAWING STATUS

CONSTRUCTION
DOCUMENTS

REVISIONS

Sym.	Description	Date

Drawn By	
Date Issued	2/13/2025
Scale	1/8" = 1'-0"
Project No.	21-6497

SHEET No.

FA2.1

Login Name: LEGI_770366
Plot Date: February 13, 2025 - 9:42 am
File Name: P:\2021\B2305166\000 Corning Veterans Hall Remod\Drawings and Models\CAD\Electrical\FA2-1.dwg
XREFS: X-CVH_LB BMA X-CVH-FB X-CVH-ME X-CVH-PD

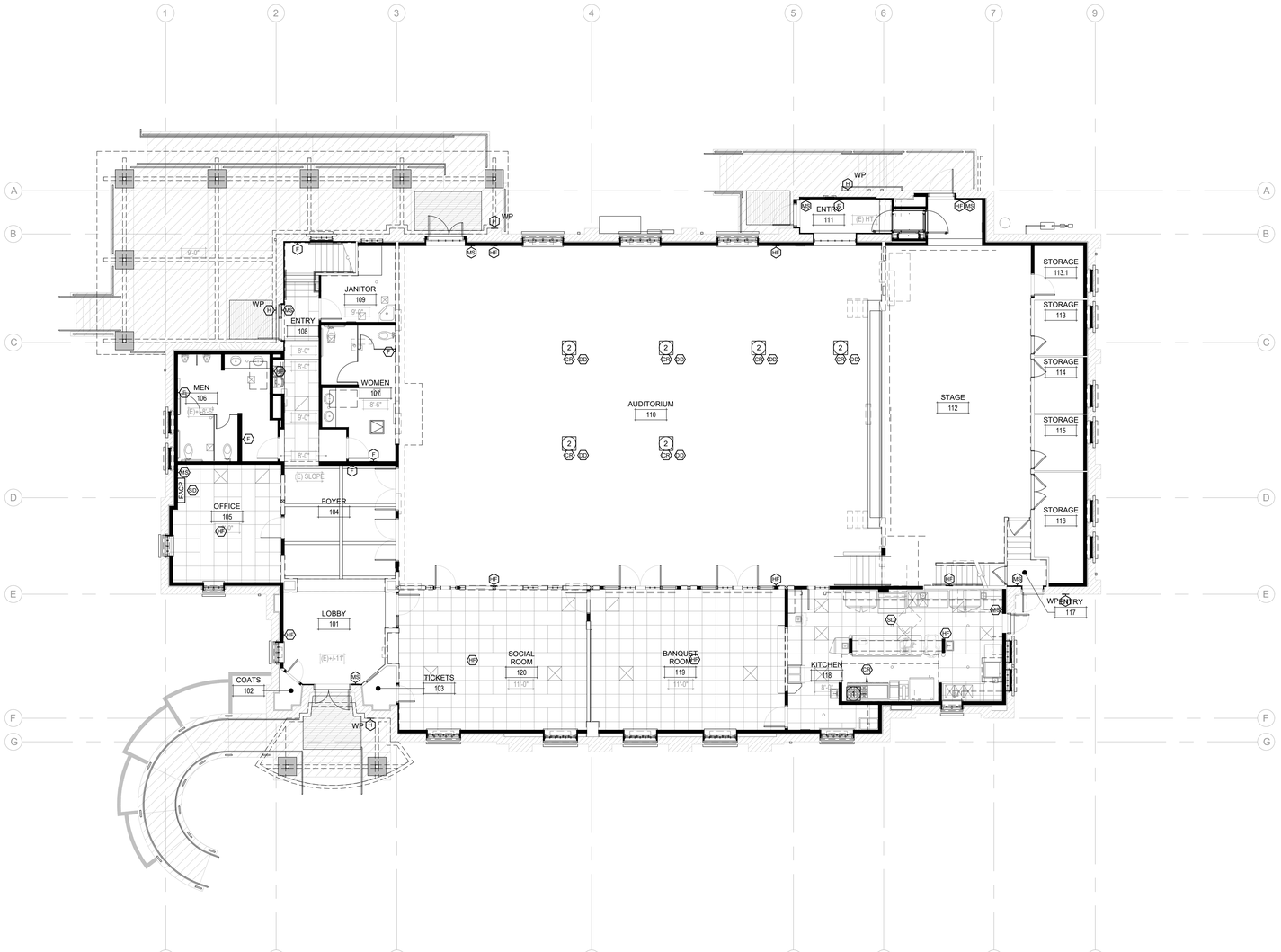

FIRE ALARM FLOOR PLAN - LEVEL 1

SCALE: 1/8" = 1'-0"

PLAN NOTES:

1. CONNECT CONTROL RELAY MODULE AS REQUIRED TO ANSUL SYSTEM. PROVIDE SOLENOID VALVE, ISIMET SERIES 300 (120V-45A) & CONTROL PANEL WITH 120V 15A CIRCUIT SUPPLY WITH INTERNAL 5A CIRCUIT BREAKER SWITCH PROTECTION AND CONNECT TO UL-300 COMPLIANT ANSUL SYSTEM. PROVIDE 3/4"C. - 2#12, 1#12 GRD. FROM NEAREST SPARE PANELBOARD. VERIFY CONNECTION REQUIREMENTS WITH HOOD MANUFACTURER.

2. CONNECT AS REQUIRED TO HVAC UNIT FOR UNIT SHUT-DOWN. REFER TO DETAIL 4, SHEET FA0.1 FOR ADDITIONAL REQUIREMENTS.

FIRE ALARM PLAN GENERAL NOTES:

1. NOTIFICATION DEVICES IN ROOMS CONTAINING (2) OR MORE AUDIBLE AND/OR (2) OR MORE VISUAL DEVICES SHALL BE SYNCHRONIZED PER NFPA 72. THIS SHALL INCLUDE AUDIBLE AND VISUAL DEVICES LOCATED IN ADJACENT/ADJOINING SPACES.

2. DO NOT DEVIATE FROM CONDUIT RUNS AS SHOWN ON FLOOR PLANS WITHOUT PRIOR APPROVAL FROM SYSTEM SUPPLIER / ENGINEER. FACTORS SUCH AS EXCESSIVE VOLTAGE DROP, ADDITIONAL PARTS, ENGINEERING, ETC. THAT ARE A RESULT OF CONDUIT RUN DEVIATIONS SHALL BE THE SOLE RESPONSIBILITY OF THE CONTRACTOR.

3. DETECTORS SHALL NOT BE LOCATED IN A DIRECT AIR-FLOW, NOR CLOSER THAN 3 FEET (915 mm) FROM ANY AIR SUPPLY DIFFUSER.

4. THE AUDIBLE ALARM NOTIFICATION APPLIANCES SHALL PROVIDE A SOUND PRESSURE LEVEL OF 15 dBA ABOVE THE AVERAGE AMBIENT SOUND LEVEL OR 5 dBA ABOVE THE MAXIMUM SOUND LEVEL HAVING DURATION OF AT LEAST 60 SECONDS, WHICHEVER IS GREATER, IN EVERY OCCUPIED SPACE WITHIN THE BUILDING PER CFC SECTION 907.5.2.1.1. THE MINIMUM SOUND PRESSURE LEVEL SHALL BE 60 dBA PER NFPA 72, TABLE A.18.4.3.

5. REFER TO ARCHITECTURAL EXTERIOR ELEVATIONS FOR PRECISE OUTLET LOCATIONS.

6. REFER TO ARCHITECTURAL REFLECTED CEILING PLAN FOR EXACT LOCATION OF ALL CEILING MOUNTED DEVICES.

7. IF SHIELDED WIRE IS USED, THE FOLLOWING MUST BE OBSERVED.
   A. METALLIC CONTINUITY OF THE SHIELD MUST BE MAINTAINED AND INSULATED THROUGHOUT THE ENTIRE LENGTH OF THE CABLE.
   B. THE ENTIRE LENGTH OF THE CABLE MUST HAVE A RESISTANCE GREATER THAN 1 MEGOHM TO EARTH.

8. ALL PENETRATIONS THROUGH FIRE RATED WALLS SHALL BE PROTECTED FROM THE SPREAD OF FIRE WITH AN APPROVED FIRE STOP SYSTEM EQUAL TO OR GREATER THAN THE FIRE RATING OF THE STRUCTURE / SURFACE BEING PENETRATED AS IDENTIFIED IN CBC CHAPTER 7. UL OR OTHER LAB TESTING CRITERIA. APPROVED TYPES OF MATERIALS SHALL BE IDENTIFIED WITHIN THE FIRE ALARM SECTION OF THE PROJECT SPECIFICATIONS.

9. A SYSTEM GROUND MUST BE PROVIDED FOR EARTH DETECTION AND LIGHTNING PROTECTION DEVICES. THIS CONNECTION SHALL BE MADE TO AN APPROVED DEDICATED EARTH CONNECTION PER CEC, ARTICLE 250.

10. WIRING IN DUCTS, PLENUMS AND OTHER AIR HANDLING SPACES MUST BE INSTALLED IN ACCORDANCE WITH CEC.

11. UNDERGROUND WIRING MUST BE FREE OF ALL WATER.

12. ALL FIRE ALARM SYSTEM CONDUCTORS SHALL BE RUN IN A DEDICATED FIRE ALARM CONDUIT SYSTEM.

13. WHERE A DETECTOR IS INDICATED TO BE INSTALLED ABOVE THE CEILING AND NO ACCESS TO THE CEILING SPACE EXISTS, THE ELECTRICAL CONTRACTOR SHALL FURNISH ACCESS PANELS. THE DETECTOR SHALL BE EASILY ACCESSIBLE AND THE LOCATION OF THE DETECTOR SHALL BE CLEARLY MARKED.

14. FIRE ALARM SYSTEM UTILIZES A MANUAL SYSTEM. PROVIDE RELAY MODULE(S) AT FATC/FACP LOCATIONS FOR CONTROL OF HVAC SHUT DOWN, SMOKE/FIRE DAMPER CLOSURE AND DOOR HOLD RELEASES.

15. WHERE NEW DEVICES (AND ASSOCIATED CONDUIT) CANNOT PHYSICALLY BE MOUNTED CONCEALED IN WALLS, RUN IN PANDUIT SURFACE RACEWAY/WIREWAY (AND DEVICES SHALL BE MOUNTED ON SURFACE OUTLET BOXES). REFER TO SPECIFICATIONS. PROVIDE SIZE OF RACEWAY TO ACCOMMODATE THE REQUIRED CONDUCTORS. WHERE CONDUIT IS INDICATED, PROVIDE SURFACE RACEWAY WITH AN EQUAL CROSS SECTION TO THE DIAMETER OF THE CONDUIT INDICATED.

16. DETECTOR SENSITIVITY SHALL BE TESTED USING MANUFACTURER'S CALIBRATED SENSITIVITY INSTRUMENT OR OTHER CALIBRATED TESTING METHOD. (CFC, SECTIONS 907.8.3 AND 907.8.4)

FIRE ALARM DEFERRED SUBMITTAL

MANUAL ADDRESSABLE FIRE ALARM SYSTEM

Copyright © 2025

All ideas, designs, arrangements and plans indicated or represented by this drawing are owned by, and the property of, NICHOLS, MELBURG and ROSSETTO and were created, evolved and developed for use on, and in conjunction with, the specified project. None of such ideas, designs, arrangements and plans shall be used by or disclosed to any person, firm or corporation for any purpose whatsoever without the written permission of NICHOLS, MELBURG and ROSSETTO.

NICHOLS MELBURG & ROSSETTO
ARCHITECTS + ENGINEERS

300 KNOLLCREST DRIVE
REDDING, CA. 96002
(530) 222-3300 (530) 222-3538 FAX
http://www.nmrdesign.com

CONSULTANTS

tk1sc
Member of WSP
11870 Pierce Street, Suite 160
Riverside, California 92505
951.299.4160 www.tk1sc.com

Project Leader - Jerry Leonhardt
Electrical Lead - Jerry Leonhardt
WSP Job #: B2305166.000

LICENSE STAMPS

REGISTERED PROFESSIONAL ENGINEER
RICHMOND W. SHAFFER
No. E15610
12/31/2025
ELECTRICAL
STATE OF CALIFORNIA

PROJECT NAME

TEHAMA COUNTY
CORNING
VETERAN'S HALL

1620 SOLANO ST.
CORNING, CA

SHEET TITLE

FIRE ALARM
FLOOR PLAN -
LEVEL 1

DRAWING STATUS

CONSTRUCTION
DOCUMENTS

REVISIONS

Sym.	Description	Date

Drawn By	
Date Issued	2/13/2025
Scale	1/8" = 1'-0"
Project No.	21-6497

SHEET No.

FA2.2

Login Name: LRSA.270366
Plot Date: February 13, 2025 - 9:43 am
File Name: P:\2021\B2305166.000 Corning Veterans Hall Remod\Drawings and Models\CAD\Electrical\FA2-2.dwg
Xrefs: a-CVH_LTB-Black | x-CVH-Hall | x-CVH-01 | x-CVH-GRID

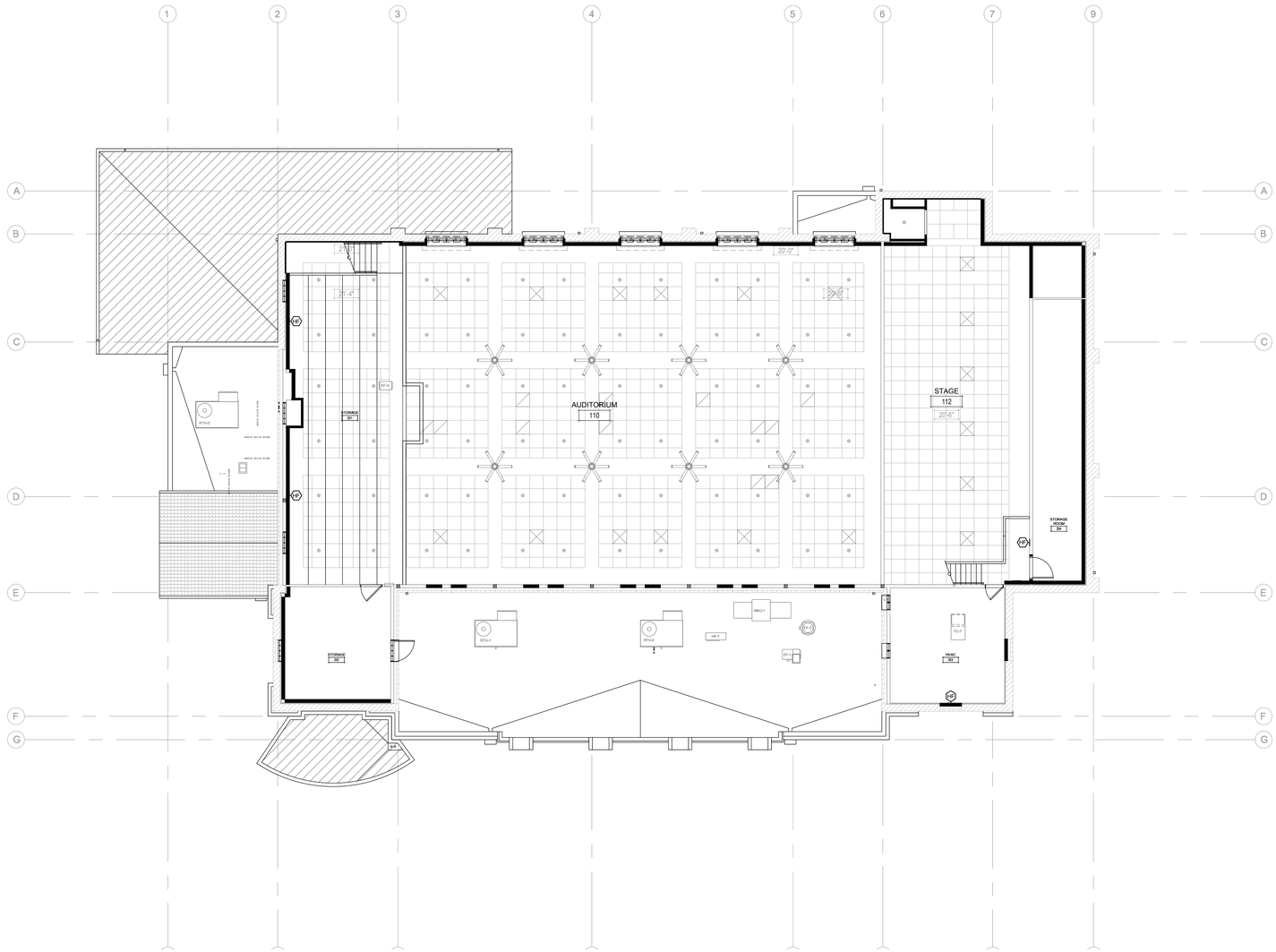

FIRE ALARM FLOOR PLAN - LEVEL 2

SCALE: 1/8" = 1'-0"

PLAN NOTES:

1 -

FIRE ALARM PLAN GENERAL NOTES:

1. NOTIFICATION DEVICES IN ROOMS CONTAINING (2) OR MORE AUDIBLE AND/OR (2) OR MORE VISUAL DEVICES SHALL BE SYNCHRONIZED PER NFPA 72. THIS SHALL INCLUDE AUDIBLE AND VISUAL DEVICES LOCATED IN ADJACENT/ADJOINING SPACES.

2. DO NOT DEVIATE FROM CONDUIT RUNS AS SHOWN ON FLOOR PLANS WITHOUT PRIOR APPROVAL FROM SYSTEM SUPPLIER / ENGINEER. FACTORS SUCH AS EXCESSIVE VOLTAGE DROP, ADDITIONAL PARTS, ENGINEERING, ETC. THAT ARE A RESULT OF CONDUIT RUN DEVIATIONS SHALL BE THE SOLE RESPONSIBILITY OF THE CONTRACTOR.

3. DETECTORS SHALL NOT BE LOCATED IN A DIRECT AIR-FLOW, NOR CLOSER THAN 3 FEET (915 mm) FROM ANY AIR SUPPLY DIFFUSER.

4. THE AUDIBLE ALARM NOTIFICATION APPLIANCES SHALL PROVIDE A SOUND PRESSURE LEVEL OF 15 dBA ABOVE THE AVERAGE AMBIENT SOUND LEVEL OR 5 dBA ABOVE THE MAXIMUM SOUND LEVEL HAVING DURATION OF AT LEAST 60 SECONDS, WHICHEVER IS GREATER, IN EVERY OCCUPIED SPACE WITHIN THE BUILDING PER CFC SECTION 907.5.2.1.1. THE MINIMUM SOUND PRESSURE LEVEL SHALL BE 60 dBA PER NFPA 72, TABLE A.18.4.3.

5. REFER TO ARCHITECTURAL EXTERIOR ELEVATIONS FOR PRECISE OUTLET LOCATIONS.

6. REFER TO ARCHITECTURAL REFLECTED CEILING PLAN FOR EXACT LOCATION OF ALL CEILING MOUNTED DEVICES.

7. IF SHIELDED WIRE IS USED, THE FOLLOWING MUST BE OBSERVED.

   A. METALLIC CONTINUITY OF THE SHIELD MUST BE MAINTAINED AND INSULATED THROUGHOUT THE ENTIRE LENGTH OF THE CABLE.

   B. THE ENTIRE LENGTH OF THE CABLE MUST HAVE A RESISTANCE GREATER THAN 1 MEGOHM TO EARTH.

8. ALL PENETRATIONS THROUGH FIRE RATED WALLS SHALL BE PROTECTED FROM THE SPREAD OF FIRE WITH AN APPROVED FIRE STOP SYSTEM EQUAL TO OR GREATER THAN THE FIRE RATING OF THE STRUCTURE / SURFACE BEING PENETRATED AS IDENTIFIED IN CBC CHAPTER 7, UL OR OTHER LAB TESTING CRITERIA. APPROVED TYPES OF MATERIALS SHALL BE IDENTIFIED WITHIN THE FIRE ALARM SECTION OF THE PROJECT SPECIFICATIONS.

9. A SYSTEM GROUND MUST BE PROVIDED FOR EARTH DETECTION AND LIGHTNING PROTECTION DEVICES. THIS CONNECTION SHALL BE MADE TO AN APPROVED DEDICATED EARTH CONNECTION PER CEC, ARTICLE 250.

10. WIRING IN DUCTS, PLENUMS AND OTHER AIR HANDLING SPACES MUST BE INSTALLED IN ACCORDANCE WITH CEC.

11. UNDERGROUND WIRING MUST BE FREE OF ALL WATER.

12. ALL FIRE ALARM SYSTEM CONDUCTORS SHALL BE RUN IN A DEDICATED FIRE ALARM CONDUIT SYSTEM.

13. WHERE A DETECTOR IS INDICATED TO BE INSTALLED ABOVE THE CEILING AND NO ACCESS TO THE CEILING SPACE EXISTS, THE ELECTRICAL CONTRACTOR SHALL FURNISH ACCESS PANELS. THE DETECTOR SHALL BE EASILY ACCESSIBLE AND THE LOCATION OF THE DETECTOR SHALL BE CLEARLY MARKED.

14. FIRE ALARM SYSTEM UTILIZES A MANUAL SYSTEM. PROVIDE RELAY MODULE(S) AT FATC/FACP LOCATIONS FOR CONTROL OF HVAC SHUT DOWN, SMOKE/FIRE DAMPER CLOSURE AND DOOR HOLD RELEASES.

15. WHERE NEW DEVICES (AND ASSOCIATED CONDUIT) CANNOT PHYSICALLY BE MOUNTED CONCEALED IN WALLS, RUN IN PANDUIT SURFACE RACEWAY/WIREWAY (AND DEVICES SHALL BE MOUNTED ON SURFACE OUTLET BOXES). REFER TO SPECIFICATIONS. PROVIDE SIZE OF RACEWAY TO ACCOMMODATE THE REQUIRED CONDUCTORS. WHERE CONDUIT IS INDICATED, PROVIDE SURFACE RACEWAY WITH AN EQUAL CROSS SECTION TO THE DIAMETER OF THE CONDUIT INDICATED.

16. DETECTOR SENSITIVITY SHALL BE TESTED USING MANUFACTURER'S CALIBRATED SENSITIVITY INSTRUMENT OR OTHER CALIBRATED TESTING METHOD. (CFC, SECTIONS 907.8.3 AND 907.8.4)

FIRE ALARM DEFERRED SUBMITTAL

MANUAL ADDRESSABLE FIRE ALARM SYSTEM

Copyright © 2025

All ideas, designs, arrangements and plans indicated or represented by this drawing are owned by, and the property of, NICHOLS, MELBURG and ROSSETTO and were created, evolved and developed for use on, and in conjunction with, the specified project. None of such ideas, designs, arrangements and plans shall be used by or disclosed to any person, firm or corporation for any purpose whatsoever without the written permission of NICHOLS, MELBURG and ROSSETTO.

NICHOLS MELBURG & ROSSETTO
ARCHITECTS + ENGINEERS

300 KNOLLCREST DRIVE
REDDING, CA. 96002
(530) 222-3300 (530) 222-3538 FAX
http://www.nmrdesign.com

CONSULTANTS

tk1sc
Member of WSP
11870 Pierce Street, Suite 160
Riverside, California 92505
951.299.4160 www.tk1sc.com

Project Leader - Jerry Leonhardt
Electrical Lead - Jerry Leonhardt
WSP Job #: B2305166.000

LICENSE STAMPS

REGISTERED PROFESSIONAL ENGINEER
RAYMOND W. GRAFF
No. E15610
12/31/2025
ELECTRICAL
STATE OF CALIFORNIA

PROJECT NAME

TEHAMA COUNTY
CORNING
VETERAN'S HALL

1620 SOLANO ST.
CORNING, CA

SHEET TITLE

FIRE ALARM
FLOOR PLAN -
LEVEL 2

DRAWING STATUS

CONSTRUCTION
DOCUMENTS

REVISIONS

Sym.	Description	Date

Drawn By	
Date Issued	2/13/2025
Scale	1/8" = 1'-0"
Project No.	21-6497

SHEET No.

FA2.3

Login Name: LISGJ.370356
Plot Date: February 13, 2025 - 9:43 am
File Name: P:\2021\B2305166.000 Corning Veterans Hall Remod\Drawings and Models\CAD\Electrical\FA2-3.dwg
XREFS: X-CVH_Title Block, X-CVH-FB2, X-CVH-GRID, X-CVH-FB2

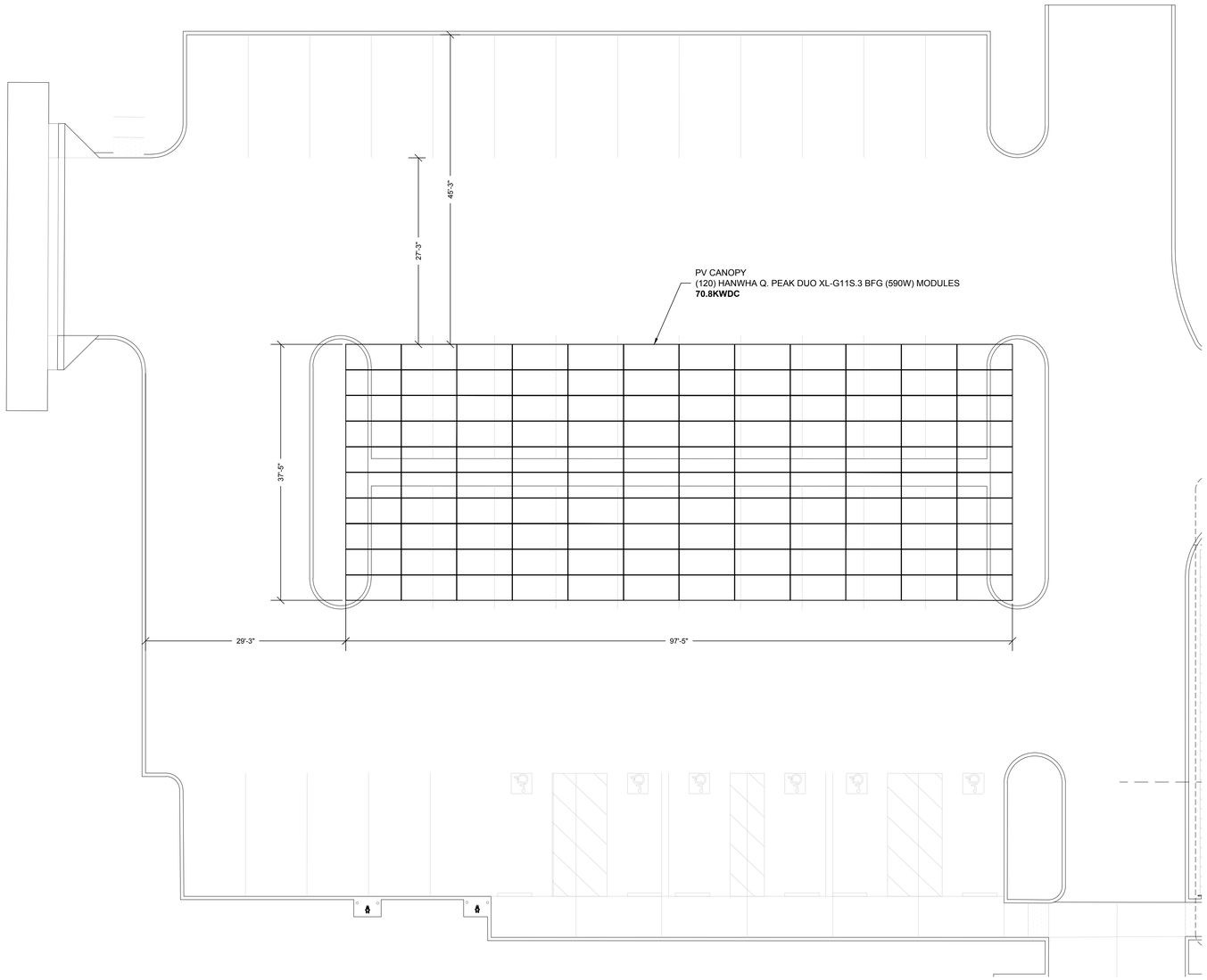

ENLARGED PARKING AREA 1/8" = 1'-0" 01

SCOPE OF WORK

1. PV SHEETS ARE INTENDED TO SUPPORT A DESIGN-BUILD APPROACH.
2. FULL PV DESIGN IS INTENDED FOR FUTURE SCOPE. THE PERMIT FOR THE PV CANOPY SHALL BE BY OTHERS.
3. THE EQUIPMENT SPECIFIED IS A BASIS OF DESIGN. EQUIVALENT EQUIPMENT CONFORMING TO THE PROJECT SPECIFICATIONS (**26 31 00)** IS ACCEPTABLE.

SHEET NOTES

1. THE PV LAYOUT IS FOR REFERENCE ONLY.
2. STEEL CANOPY DESIGN AND PV MODULE ATTACHMENT DETAIL IS BY OTHERS.

PV SYSTEM DETAILS

DC SIZE	70.8 KWDC
MODULE (590W)	(120) HANWHA Q.PEAK DUO XL-G11S.3/BFG
AC SIZE	175 KWAC
INVERTER	(3) CPS SCA25KTL-DO-US-208
AZIMUTH/TILT	180° / 7°
RACKING	PV PARKING CANOPY

Copyright © 2025

All ideas, designs, arrangements and plans indicated or represented by this drawing are owned by, and the property of, NICHOLS, MELBURG and ROSSETTO and were created, evolved and developed for use on, and in conjunction with, the specified project. None of such ideas, designs, arrangements and plans shall be used by or disclosed to any person, firm or corporation for any purpose whatsoever without the written permission of NICHOLS, MELBURG and ROSSETTO.

NICHOLS MELBURG & ROSSETTO
ARCHITECTS + ENGINEERS

300 KNOLLCREST DRIVE
REDDING, CA. 96002
(530) 222-3300 (530) 222-3538 FAX
http://www.nmrdesign.com

CONSULTANTS

tk1sc
Member of WSP
11870 Pierce Street, Suite 160
Riverside, California 92505
951.299.4160 www.tk1sc.com

Project Leader - Jerry Leonhardt
Photovoltaic Lead - Jessica Kendrick
WSP Job #: B2305166.000

LICENSE STAMPS

REGISTERED PROFESSIONAL ENGINEER
LEONARD W. SPRAGUE
No. E15610
12/31/2025
ELECTRICAL
STATE OF CALIFORNIA

PROJECT NAME

TEHAMA COUNTY
CORNING
VETERAN'S HALL

1620 SOLANO ST.
CORNING, CA

SHEET TITLE

PV LAYOUT - PARKING AREA

DRAWING STATUS

CONSTRUCTION DOCUMENTS

REVISIONS

Sym.	Description	Date

Drawn By	
Date Issued	2/13/2025
Scale	1"=20'-0"
Project No.	21-6497

SHEET No.

PV-2.1

Login Name: LEJ&KTO350
Plot Date: February 13, 2025 - 12:53 pm
File Name: P:\2021\B2305166\00 Corning Veterans Hall Remod\Drawings and Models\CAD\Photo Voltaic\PV-2-1.dwg
XREFS: X-CIVIL_Site Base; X-CIVIL-Utilities; X-CIVIL-Grading; X-CIVIL-Paving; X-CIVIL-GRID

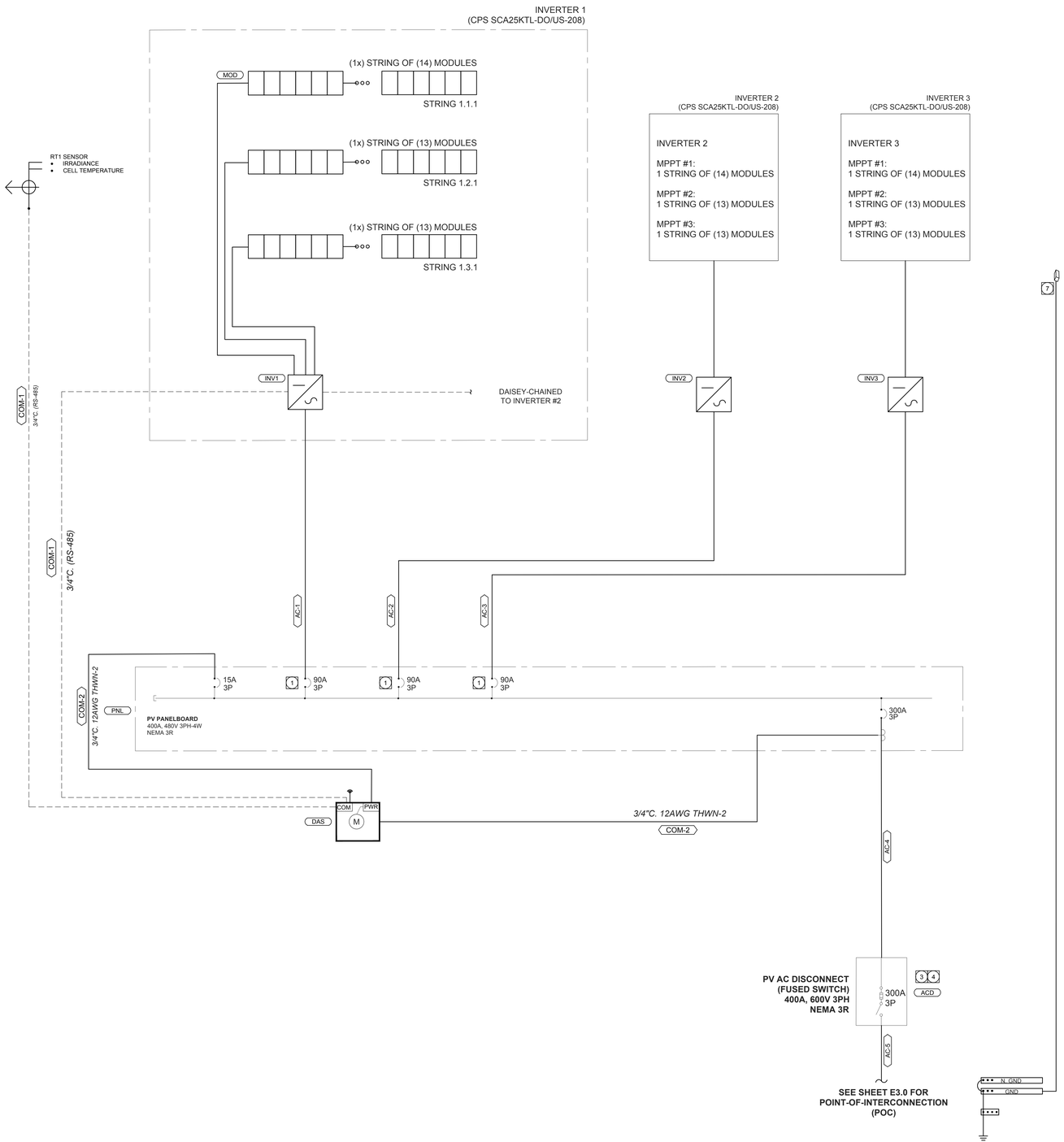

GENERAL FEEDER NOTES:

1. CONDUCTORS SHALL BE COPPER ONLY. DC CONDUCTORS SHALL BE RATED FOR A MINIMUM OF 90°C.
2. ALL FEEDERS SHOWN, UNLESS SPECIFICALLY NOTED OTHERWISE, ARE PRESUMED TO BE ROUTED IN METAL RACEWAYS. IF P.V.C. CONDUITS ARE UTILIZED, THE CONTRACTOR SHALL PROVIDE AN EQUIPMENT GROUND PER NEC, OR CEC WHERE ADOPTED, TABLE 250.122 OR, WHERE REQUIRED, PROVIDE A MAIN BONDING JUMPER PER TABLE 250.66 AND INCREASE THE CONDUIT SIZE ACCORDINGLY.
3. DISTANCE SHOWN IS FOR DESIGN PURPOSES ONLY. IT IS NOT A MATERIAL TAKEOFF.
4. VOLTAGE DROP VALUE INDICATED IS AT THE END OF THE FEEDER.
5. AVAILABLE FAULT CURRENT VALUE AT THE END OF THE FEEDER INDICATED. CALCULATIONS ARE BASED UPON INITIAL VALUES RECEIVED FROM THE SERVING UTILITY AND THE LENGTH AND IMPEDANCE OF THE FEEDER. THE SHORT CIRCUIT CURRENT RATING, EQUIPMENT BUS BRACING, AND/OR AMP INTERRUPTING CURRENT OF EQUIPMENT CONNECTED ON THE LOAD SIDE OF THE FEEDER SHALL BE GREATER THAN THE AVAILABLE FAULT CURRENT.

GENERAL SINGLE LINE DIAGRAM NOTES:

1. REFER TO MANUFACTURERS SPECIFICATIONS FOR PROPER INSTALLATION OF EQUIPMENT.
2. ALL OVERCURRENT DEVICES IN AN INDIVIDUAL PIECE OF EQUIPMENT SHALL HAVE AN AIC RATING EQUAL TO THE OVERALL RATING OF THE EQUIPMENT-SERIES RATING OF DEVICES WITHIN A PIECE OF EQUIPMENT IS NOT ALLOWED.
3. BOND METAL STRUCTURE TO SYSTEM GROUND. PV SYSTEM SHALL BE GROUNDED IN ACCORDANCE WITH NEC 690.43.
4. BOND PV RACKING PER MANUFACTURER'S INSTALLATION REQUIREMENTS. INSTALL 6 AWG CU UNLESS OTHERWISE NOTED BY RACKING MANUFACTURER.

SPECIFIC SINGLE LINE NOTES:

1. PV BREAKER SHALL BE GFP-EQUIPPED AND SUITABLE FOR BACKFEED PER NEC 705.32.
2. N/A
3. DISCONNECT SHALL BE 24/7 ACCESSIBLE, LOCKABLE, VISIBLE TYPE PER UTILITY REQUIREMENTS.
4. EACH PV SYSTEM DISCONNECTING MEANS SHALL BE PERMANENTLY MARKED PER NEC 690.13(B).
5. METER TO BE NET METERED. CONFIRM EXACT REQUIREMENTS WITH UTILITY.
6. THE BUILD CONTRACTOR SHALL BE RESPONSIBLE FOR FACILITATING UTILITY INTERCONNECTION APPROVAL AND COORDINATING INSPECTIONS ASSOCIATED WITH PERMISSION TO OPERATE (PTO).
7. THE RACKING SYSTEM IS NOT UL LISTED OR IDENTIFIED TO BOND PV MODULE FRAMES TO THE RACKING. THEREFORE, AN EGC SHALL BE INSTALLED FOR THE PURPOSE OF AN ELECTRICAL BOND WEHRE THE COMPONENTS ARE MECHANICALLY CONNECTED.

   PV MODULES SHALL BE BONDED BY INSTALLING AN ILSCO (OR EQUIVALENT) SOLAR GROUNDING LUG AT THE MODULE FRAME WITH A DAISY-CHANINED 10AWG BARE CU WIRE (OR APPROVED GROUNDING EQUIVALENT).

EQUIPMENT SCHEDULE

ID	EQUIPMENT	QTY
MOD	HANWHA Q.PEAK DUO XL-G11S.3 BFG (590W)	120
INV	CPS SCA25KTL-DO/US-208	3
PNL	400A, 480V 3PH, NEMA 3R, PANELBOARD	1
ACD	400A, 600V 3PH, NEMA 3R, VISIBLE LOCKABLE AC DISCONNECT	1

SCOPE OF WORK

1. PV SHEETS ARE INTENDED TO SUPPORT A DESIGN-BUILD APPROACH.
2. FULL PV DESIGN IS INTENDED FOR FUTURE SCOPE. THE PERMIT FOR THE PV CANOPY SHALL BE BY OTHERS.
3. THE EQUIPMENT SPECIFIED IS A BASIS OF DESIGN. EQUIVALENT EQUIPMENT CONFORMING TO THE PROJECT SPECIFICATIONS (**26 31 00**) IS ACCEPTABLE.

Copyright © 2025

All ideas, designs, arrangements and plans indicated or represented by this drawing are owned by, and the property of, NICHOLS, MELBURG and ROSSETTO and were created, evolved and developed for use on, and in conjunction with, the specified project. None of such ideas, designs, arrangements and plans shall be used by or disclosed to any person, firm or corporation for any purpose whatsoever without the written permission of NICHOLS, MELBURG and ROSSETTO.

NICHOLS MELBURG & ROSSETTO
ARCHITECTS + ENGINEERS
300 KNOLLCREST DRIVE
REDDING, CA. 96002
(530) 222-3300 (530) 222-3538 FAX
http://www.nmrdesign.com

CONSULTANTS

tk1sc
Member of WSP
11870 Pierce Street, Suite 160
Riverside, California 92505
951.299.4160 www.tk1sc.com
Project Leader - Jerry Leonhardt
Photovoltaic Lead - Jessica Kendrick
WSP Job #: B2305166.000

LICENSE STAMPS

REGISTERED PROFESSIONAL ENGINEER
RAYMOND W. SRAMEK
No. E15610
Exp. 12/31/2025
ELECTRICAL
STATE OF CALIFORNIA

PROJECT NAME

TEHAMA COUNTY
CORNING
VETERAN'S HALL

1620 SOLANO ST.
CORNING, CA

SHEET TITLE

PV SINGLE LINE DIAGRAM

DRAWING STATUS

CONSTRUCTION DOCUMENTS

REVISIONS

Sym.	Description	Date

Drawn By	
Date Issued	2/13/2025
Scale	-
Project No.	21-6497

SHEET No.

PV-3.2

Logo Name: (JS-KT0250)
Plot Date: February 13, 2025 - 12:54 pm
File Name: P:\2021\21-6497 Corning Veterans Hall Remod\Drawings and Models\CAD\Photo Voltaic\PV-3.2.dwg
Plotted By: Kyle Black

Q.PEAK DUO XL-G11S SERIES

585-600Wp | 156Cells
21.5% Maximum Module Efficiency

MODEL Q.PEAK DUO XL-G11S.3/BFG

Bifacial energy yield gain of up to 21%
Bifacial Q.ANTUM solar cells make efficient use of light shining on the module rear-side for radically improved LCOE.

Low electricity generation costs
Q.ANTUM DUO technology with optimized module layout to boost module power and improve LCOE.

A reliable investment
Double glass module design enables extended lifetime with 12-year product warranty and improved 30-year performance warranty[1].

Enduring high performance
Long-term yield security with Anti LID and Anti PID Technology[2], Hot-Spot Protect.

Frame for versatile mounting options
High-tech aluminum alloy frame protects from damage, enables use of a wide range of mounting structures and is certified regarding IEC for high snow (5400 Pa) and wind loads (2400 Pa).

Innovative all-weather technology
Optimal yields, whatever the weather with excellent low-light and temperature behavior.

[1] See data sheet on rear for further information.
[2] APT test conditions according to IEC/TS 62804-1:2015 method B (−1500V, 168h) including post treatment according to IEC 61215-1-1 Ed. 2.0 (CD)

The ideal solution for:
Ground-mounted solar power plants

Q.PEAK DUO XL-G11S SERIES

■ Mechanical Specification

Format	96.9 in × 44.6 in × 1.38 in (including frame) (2462 mm × 1134 mm × 35 mm)
Weight	76.9 lbs (34.9 kg)
Front Cover	0.08 in (2.0 mm) thermally pre-stressed glass with anti-reflection technology
Back Cover	0.08 in (2.0 mm) semi-tempered glass
Frame	Anodised aluminium
Cell	6 × 26 monocrystalline Q.ANTUM solar half cells
Junction box	2.09-3.98 × 1.26-2.36 × 0.59-0.71 in (53-101 mm × 32-60 mm × 15-18 mm), Protection class IP67, with bypass diodes
Cable	4 mm² Solar cable; (+) ≥29.5 in (750 mm), (−) ≥13.8 in (350 mm)
Connector	Stäubli MC4-Evo2

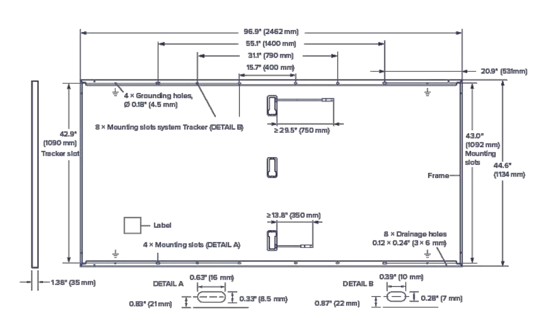

■ Electrical Characteristics

POWER CLASS			585		590		595		600	
MINIMUM PERFORMANCE AT STANDARD TEST CONDITIONS, STC[1] (POWER TOLERANCE +5 W / −0 W)				BSTC*		BSTC*		BSTC*		BSTC*
Minimum: Power at MPP[1]	P_{MPP}	[W]	585	639.9	590	645.4	595	650.8	600	656.3
Short Circuit Current[1]	I_{SC}	[A]	13.72	15.01	13.74	15.04	13.77	15.07	13.80	15.10
Open Circuit Voltage[1]	V_{OC}	[V]	53.57	53.76	53.60	53.79	53.63	53.82	53.66	53.85
Current at MPP	I_{MPP}	[A]	13.07	14.30	13.12	14.36	13.17	14.41	13.22	14.46
Voltage at MPP	V_{MPP}	[V]	44.75	44.74	44.96	44.95	45.18	45.17	45.39	45.38
Efficiency[1]	η	[%]	≥21.0		≥21.1		≥21.3		≥21.5	

Bifaciality of P_{MPP} and I_{SC} 70 % ±5 % • Bifaciality given for rear side irradiation on top of STC (front side) • According to IEC 60904-1-2

[1]Measurement tolerances P_{MPP} ±3 %; I_{SC}, V_{OC} ±5 % at STC: 1000 W/m²; *at BSTC: 1000 W/m² + φ × 135 W/m², φ = 70 % ±5 %, 25±2 °C, AM 1.5 according to IEC 60904-3

MINIMUM PERFORMANCE AT NORMAL OPERATING CONDITIONS, NMOT[2]			585	590	595	600
Minimum: Power at MPP	P_{MPP}	[W]	440.5	444.2	448.0	451.8
Short Circuit Current	I_{SC}	[A]	11.05	11.07	11.09	11.11
Open Circuit Voltage	V_{OC}	[V]	50.67	50.69	50.72	50.75
Current at MPP	I_{MPP}	[A]	10.30	10.34	10.38	10.42
Voltage at MPP	V_{MPP}	[V]	42.79	42.97	43.15	43.34

[1]Measurement tolerances P_{MPP} ±3 %; I_{SC}; V_{OC} ±5 % at STC: 1000 W/m², 25±2 °C, AM 1.5 according to IEC 60904-3 • [2]800 W/m², NMOT, spectrum AM 1.5

Qcells PERFORMANCE WARRANTY

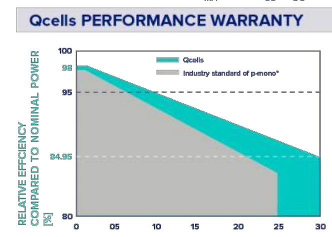

At least 98% of nominal power during first year. Thereafter max. 0.45% degradation per year. At least 93.95% of nominal power up to 10 years. At least 84.95% of nominal power up to 30 years.

All data within measurement tolerances. Full warranties in accordance with the warranty terms of the Qcells sales organisation of your respective country.

*Standard terms of guarantee for the 5 PV companies with the highest production capacity in 2021 (February 2021)

PERFORMANCE AT LOW IRRADIANCE

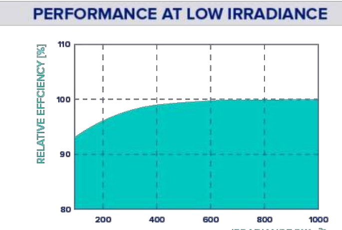

Typical module performance under low irradiance conditions in comparison to STC conditions (25 °C, 1000 W/m²).

TEMPERATURE COEFFICIENTS							
Temperature Coefficient of I_{SC}	α	[%/K]	+0.04	Temperature Coefficient of V_{OC}	β	[%/K]	−0.27
Temperature Coefficient of P_{MPP}	γ	[%/K]	−0.34	Nominal Module Operating Temperature	NMOT	[°F]	109±5.4 (43±3 °C)

■ Properties for System Design

Maximum System Voltage V_{SYS}	[V]	1500	PV module classification	Class II
Maximum Series Fuse Rating	[A DC]	25	Fire Rating based on ANSI/UL 61730	TYPE 29[4]
Max. Design Load, Push/Pull[3]	[lbs/ft²]	75 (3600 Pa)/33 (1600 Pa)	Permitted Module Temperature on Continuous Duty	−40 °F up to +185 °F (−40 °C up to +85 °C)
Max. Test Load, Push/Pull[3]	[lbs/ft²]	113 (5400 Pa)/50 (2400 Pa)		

[3] See Installation Manual
[4] New Type is similar to Type 3 but with metallic frame

■ Qualifications and Certificates

UL61730-1 & UL61730-2, CE-compliant, Quality Controlled PV - TÜV Rheinland, IEC 61215:2016, IEC 61730:2016, U.S. Patent No. 9,893,215 (solar cells).

* Contact your Qcells Sales Representative for details regarding the module's eligibility to be Buy American Act (BAA) compliant.

Qcells pursues minimizing paper output in consideration of the global environment.
Note: Installation instructions must be followed. Contact our technical service for further information on approved installation of this product.
Hanwha Q CELLS America Inc. 400 Spectrum Center Drive, Suite 1400, Irvine, CA 92618, USA | TEL +1 949 748 59 96 | EMAIL hqc-inquiry@qcells.com | WEB www.qcells.com

Specifications subject to technical changes © Qcells Q.PEAK_DUO_XL_G11S-BFG_series_585-600_DA_2023-11_Rev02

Datasheet

25 kW 208 Vac, 1000 Vdc String Inverters for North America

The 25 kW (25 kVA) CPS three-phase string inverters are designed for rooftop and carport applications. The units are high performance, advanced and reliable inverters designed specifically for the North American environment and grid. High efficiency at 97.0% peak and 96.5% CEC, wide operating voltages, broad temperature ranges and a NEMA Type 4X enclosure enable this inverter platform to operate at high performance across many applications. The CPS 25KTL-208V product ships with the Rapid Shutdown Wire-box, fully integrated and separable with touch-safe fusing, monitoring, and AC and DC disconnect switches. The integrated PLC transmitter in the Rapid Shutdown Wire-box enables PVRSS-certified module-level rapid shutdown when used with APS RSD-S-PLC/RSD-D products. The CPS FlexOM Gateway enables monitoring, controls and remote product upgrades.

Key Features

- NEC 2017/2020 PVRSS-certified rapid shutdown
- NEC 2017-compliant and UL-listed arc-fault circuit protection
- UL 1741-SB and IEEE 1547-2018 certified
- 15-90° mounting orientation for low-profile roof installs
- Optional FlexOM Gateway enables remote firmware upgrades
- Integrated AC and DC disconnect switches
- 3 MPPTs with 2 inputs each for maximum flexibility
- Copper- and Aluminum-compatible AC connections
- NEMA Type 4X outdoor rated, tough tested enclosure
- UL 1741-SA certified to CA Rule 21, including SA8-SA18
- Separable wire-box design for fast service
- Standard 10-year warranty with extensions to 20 years
- Generous 1.8 DC/AC inverter load ratio

CPS SCA25KTL-DO/US-208

SCA25KTL (208V) Rapid Shutdown Wire-box

© CHINT POWER SYSTEMS AMERICA 2023/6-MKT NA

Chint Power Systems America
1380 Presidential Drive, Suite 100, Richardson, TX 75081
Tel: 855-584-7168 Mail: AmericaSales@chintpower.com Web: www.chintpowersystems.com

Technical Data

Model Name	CPS SCA25KTL-DO/US-208
DC Input	
Max. PV power	45 kW (17 kW per MPPT)
Max. DC input voltage	1000 Vdc
Operating DC input voltage range	200-950 Vdc
Start-up DC input voltage / power	330 V / 80 W
Number of MPP trackers	3
MPPT voltage range @ PF>0.99	480-850 Vdc
Max. PV short-circuit current (Isc x 1.25)	135 A (45 A per MPPT)
Number of DC inputs	6 inputs, 2 per MPPT
DC disconnection type	Load-rated DC switch
DC surge protection	Type II MOV
AC Output	
Rated AC output power @ PF>0.99	25 kW
Max. AC apparent power (selectable)	25 kVA
Rated output voltage	208 Vac
Output voltage range[1]	183 - 228 Vac
Grid connection type	3Φ / PE / N (neutral optional)
Max. AC output current @ 208 Vac	69.5 A
Rated output frequency	60 Hz
Output frequency range[1]	57 - 63 Hz
Power factor	>0.99 (±0.8 adjustable)
Current THD @ rated load	<3 %
Max. fault current contribution (1 cycle RMS)	64.1 A (0.92 PU)
Max. OCPD rating	125 A
AC disconnection type	Load-break rated AC switch
AC surge protection	Type II MOV
System and Performance	
Topology	Transformerless
Max. efficiency	97.0%
CEC efficiency	96.5%
Stand-by / night consumption	<3 W
Environment	
Enclosure protection degree	NEMA Type 4X
Cooling method	Variable speed cooling fans
Operating temperature range[2]	-22°F to +140°F / - 30°C to +60°C
Non-operating temperature range[3]	No low temp minimum to +158°F / +70°C maximum
Operating humidity	0 to 100%
Operating altitude	13123 ft / 4000 m (derating from 9843 ft / 3000 m)
Audible noise	<60 dBA @ 1 m and 25°C
Display and Communication	
User interface and display	LCD+LED
Inverter monitoring	SunSpec; Modbus RS485
Site-level monitoring	CPS FlexOM Gateway (1 per 32 inverters)
Modbus data mapping	CPS
Remote diagnostics / firmware upgrade functions	Standard / (with FlexOM Gateway)
Mechanical	
Dimensions (H x W x D)	39.4 x 23.6 x 10.2 in (1000 x 600 x 260 mm)
Weight	Inverter: 123.5 lbs (56 kg); Wire-box: 33 lbs (15 kg)
Mounting / installation angle[4]	15 to 90 degrees from horizontal (vertical or angled)
AC termination	M8 stud type terminal block (wire range: #6 - 3/0 AWG CU/AL, lugs not supplied)
DC termination[5]	Screw clamp, neg. busbar[5] wire range: #14 - #6 AWG CU
Fused string inputs (2 per MPPT)[6]	20 A fuses provided (fuse values up to 30 A acceptable)
Safety	
Certifications and standards	UL 1741-SA/SB Ed. 3, UL 1699B, UL 1998, CSA-C22.2 NO.107.1-01, IEEE 1547-2018, FCC PART15
Selectable grid standard	IEEE 1547a-2014, IEEE 1547-2018[7], CA Rule 21, ISO-NE, HECO
Smart-grid features	Volt-RideThru, Freq-RideThru, Ramp-Rate, Specified-PF, Volt-VAR, Freq-Watt, Volt-Watt
Warranty	
Standard	10 years
Extended terms	15 and 20 years

1) The "output voltage range" and "output frequency range" may differ according to the specific grid standard.
2) Active power derating begins at 45°C when PF=1 and MPPT≥Vmin, and at 50°C when PF=1 and MPPT≥700 Vdc
3) See user manual for further requirements regarding non-operating conditions.
4) Shade Cover accessory required for installation angles of 75 degrees or less.
5) RSD wire-box only includes fuses and fuse holders on the positive polarity, compliant with NEC 2017/2020 Section 690.9(C).
6) Fuse values above 20 A have additional spacing requirements or require the use of the Y-Comb Terminal Block. See user manual for further details.
7) Firmware version 4.0 or later required.

Copyright © 2025
All ideas, designs, arrangements and plans indicated or represented by this drawing are owned by, and the property of, NICHOLS, MELBURG and ROSSETTO and were created, evolved and developed for use on, and in conjunction with, the specified project. None of such ideas, designs, arrangements or plans shall be used by, or disclosed to any person, firm or corporation for any purpose whatsoever without the written permission of NICHOLS, MELBURG and ROSSETTO.

NICHOLS MELBURG & ROSSETTO
ARCHITECTS + ENGINEERS
300 KNOLLCREST DRIVE
REDDING, CA. 96002
(530) 222-3300 (530) 222-3538 FAX
http://www.nmrdesign.com

CONSULTANTS

tk1sc
Member of WSP
11870 Pierce Street, Suite 160
Riverside, California 92505
951.299.4160 www.tk1sc.com
Project Leader - Jerry Leonhardt
Photovoltaic Lead - Jessica Kendrick
WSP Job #: B2305166.000

LICENSE STAMPS

PROJECT NAME

TEHAMA COUNTY
CORNING
VETERAN'S HALL

1620 SOLANO ST.
CORNING, CA

SHEET TITLE

EQUIPMENT
DATA SHEETS

DRAWING STATUS

CONSTRUCTION
DOCUMENTS

REVISIONS

Sym.	Description	Date

Drawn By	
Date Issued	2/13/2025
Scale	-
Project No.	21-6497

SHEET No.

PV-4.2

Login Name: USJK700350
Plot Date: February 13, 2025 - 12:54 pm
File Name: P:\2023\B2305166.000 Corning Veterans Hall Remod\Drawings and Models\CAD\Photo Voltaic\PV-4-2.dwg
XREFS: x-CVH_Title Block